consulting engineers

NRB

Traffic & Transport Assessment Report

incl.

DMURS Statement of Consistency,

Planning Stage Construction

Traffic Management Plan &

Stage 1 Road Safety &

Quality Audit.

For

Proposed Large Scale Residential Development (LRD)

At

Kilnahue, Gorey, Co. Wexford.

SUBMISSION ISSUE

5th Floor, 40 Mespil Road, Dublin 4, D04 C2N4
Tel: +353 1 292 1941, E-mail: info@nrb.ie, Web: www.nrb.ie

Registered in Ireland No. 491679

Contents

Page	Section	Description
2	--	Executive Summary
4	1.0	Introduction
9	2.0	Existing Conditions & Proposed Development
20	3.0	Trip Generation Assignment and Distribution
22	4.0	Traffic & Transport Impact - Traffic Capacity Results
25	5.0	Conclusions

Appendices.....

A	Proposed Development – Site Layout Plans/Access Arrangement
B	Traffic Survey Output Data
C	TRICS Output Data Sheets (Residential Housing / Apartments and Creche)
D	Traffic Calculations, Trip Distribution, Network Traffic Flow Diagrams & Projections
E	PiCADY Capacity Modelling – R725 Site Access Ghost Island Junction
F	PiCADY Capacity Modelling – L10112 Northern Site Access T-Junction
G	PiCADY Capacity Modelling – L10112 Southern Site Access T- Junction
H	PiCADY Capacity Modelling – Existing R725 / L10112 T- Junction
I	ARCADY Capacity Modelling – Existing R725 / Woodbury Mini-Roundabout Junction
J	PiCADY Capacity Modelling – Existing R725 / R772 Exit Only T- Junction
K	PiCADY Capacity Modelling – Existing R725 / R772 Access Only T- Junction
L	DMURS Statement of Consistency Report
M	Planning Stage Construction Traffic Management Plan
N	Stage 1 Road Safety/Quality Audit (& Designers Feedback Form)

EXECUTIVE SUMMARY

NRB Consulting Engineers Ltd were appointed to prepare a Traffic & Transport Assessment Report associated with a planning application for a 413 no. Unit Large Scale Residential Development (LRD), including a Creche at Kilnahue, Gorey, Co Wexford.

The proposed development with the main vehicular access from the 60km/hr section of the Carnew Road (R725) and two accessed from the L10112 Kilnahue Lane, includes the construction of 349 no. houses and 64 no. apartments - including 134 no. 2-bedroom houses, 176 no. 3-bedroom houses; 39 no. 4-bedroom houses; 36 no. 1-bedroom apartments / maisonettes; 28 no. 3-bedroom apartments. The scheme includes an ancillary Creche and community room. (Refer ***Appendix A*** for Layout Plan).

This TTA has been prepared to address the Traffic/Transportation issues and Traffic Impact associated with the proposal, and specifically the impact upon the capacity of the existing adjacent road network.

While the proposed development represents a large-scale residential project, the associated traffic generation is relatively modest in relation to the capacity of the immediate local road network. The assessment focuses on the capacity and safety of the proposed site access junctions and the impact upon the immediate road network itself. The Report has been prepared fully in accordance with TII's Traffic & Transport Assessment Guidelines and addresses the worst-case traffic impact of the proposal.

We commissioned and undertook new traffic surveys of the adjacent road network during February 2025 when schools were fully open. This traffic survey data formed the basis of the study. Based on this recent traffic survey data, future year traffic conditions were then established using TII-approved annual growth factors. This represents industry-standard procedure with the traffic survey data forming the basis of the study.

The Traffic & Transport Assessment confirms that the established existing road network, and the proposed development access junctions, are more than adequate to accommodate the worst-case traffic associated with the development.

The assessment confirms that the full occupation of the scheme will have a negligible and unnoticeable impact upon the operation of the adjacent road network.

A Statement of Consistency with DMURS has also been prepared, which confirms that the internal layout is compliant with the DMURS requirements, and this is included as a separate report as ***Appendix L***. A planning stage Construction Traffic Management Plan

has been provided as **Appendix M**. An independent Stage 1 Road Safety / Quality Audit of the plans and the site access junctions, together with the Designer Feedback form, has been undertaken and is included as a separate report as ***Appendix N***.

Based on our studies, we conclude that there are no adverse or significant traffic/transport, capacity or operational issues associated with the proposed high quality Residential Development which would prevent planning permission being granted by Wexford County Council.

1.0 INTRODUCTION

1.1 This Traffic and Transport Assessment (TTA) has been prepared by NRB Consulting Engineers Ltd and addresses the Traffic/Transport issues planning application for a 413 no. Unit Large Scale Residential Development (incl Creche) at Kilnahue, Gorey, Co Wexford.

1.2 Drawings of the proposals are included as ***Appendix A***, with a site location plan for reference included below as ***Figure 1.1***;

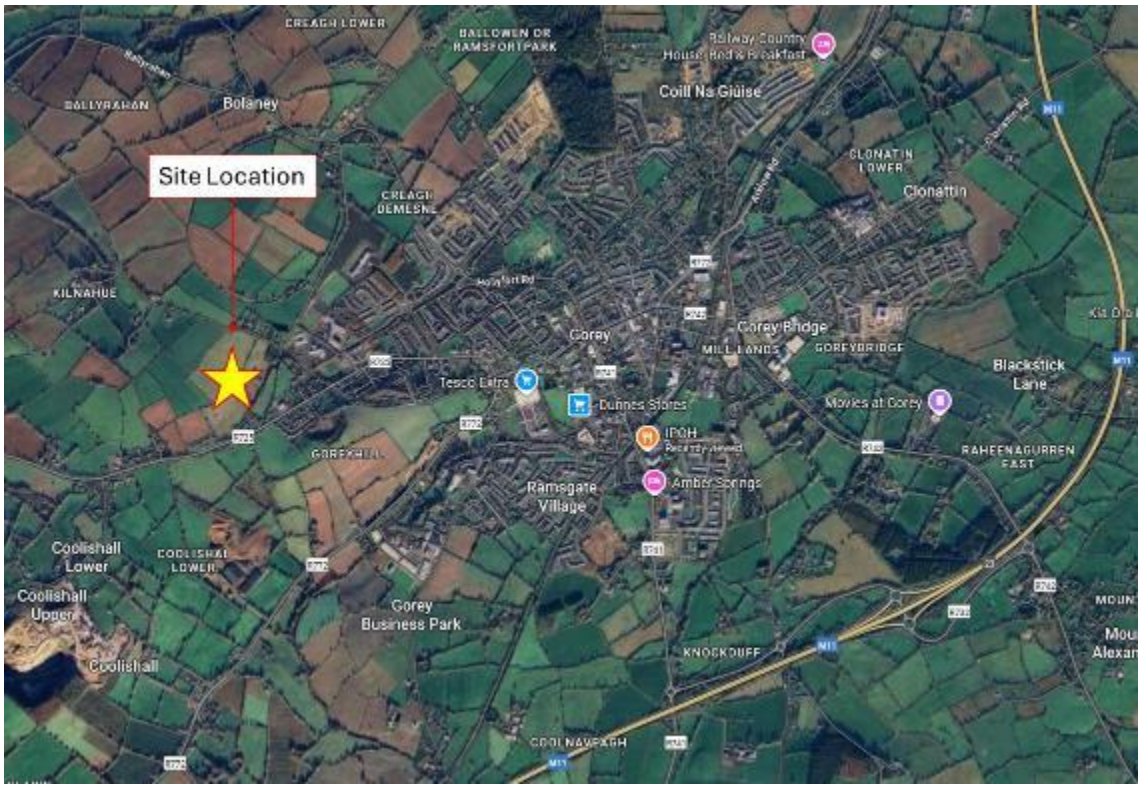

Figure 1.1 - Site Location

1.3 In describing the Receiving Environment and the Proposed Future Environment, this report addresses the following aspects of the proposed development:

- The levels of traffic generated by the proposed development based on the established TRICS Database (using Irish Housing Trip Rates),
- Location of the development on suitably zoned and easily accessible lands being an extension to an established residential area,
- Best Practice Sustainability Principles,
- Traffic & Transport impact,
- Capacity of the local affected roads to accommodate the worst-case development traffic flows, and

- Adequacy and safety of the existing roads and junctions locally, within the area of influence.

1.4 Recommendations contained within this Traffic & Transport Assessment are based on the following sources of information and industry-standard practices; -

- TII Traffic & Transport Assessment Guidelines,
- The most recent version of the TRICS Database (extracting Irish Data),
- Recent Local Traffic Survey Data,
- Relevant Design Guidance including Design Manual for Urban Roads and Streets (DMURS),
- Junction Capacity Modelling using TII-approved Proprietary Software, and,
- Our experience in assessing the impact of Developments of this Nature.

1.5 The Report has been prepared in accordance with the requirements of the TII's Traffic & Transport Assessment Guidelines 2014. These are the professional Guidelines used to assess the impact of developments on public roads.

1.6 We have prepared a Statement of Consistency with DMURS and confirm that the internal layout and site access junction(s) are compliant with the requirements, and this is included as a separate report as ***Appendix L***.

1.7 A planning stage Construction Traffic Management Plan has been provided as ***Appendix M***.

1.8 An independent Stage 1 Road Safety / Quality Audit of the plans and the adjacent road network, together with the Designer Feedback form, has been undertaken and is included as a separate report as ***Appendix N***.

Wexford County Council LRD Opinion

1.9 We include below the extract from the Wexford County Council (WCC) Opinion received in connection with this application, regarding Traffic and Transportation issues within the Opinion, and we set out thereafter our response to each item in turn.

Transportation

It is noted that the site layout complies with DMURS standards. The applicant is requested to address the points raised at the preplanning meeting including,-

- R725 junction with Kilnahue Lane - Traffic Lights required - Details to be agreed with Roads Department

1.10 **R725 / L10112 Junction** – The existing junction is not currently suitable for conversion to a signal-controlled layout, as this would provide limited benefit to pedestrians given the absence of a footpath along the southern side of the R725. Consequently, the only approach where a controlled pedestrian crossing could be implemented would be on the L10112. In addition, two existing residential developments located on the southern side of the R725 would be adversely affected by such an upgrade, and you cannot have residential accesses entering a signal junction without themselves having signal control.

1.11 The existing junction does not suffer from capacity issues, with a low volume of traffic using the junction. While a temporary increase in traffic occurs during the AM peak period, this is primarily associated with school related trips to the two schools located on Kilnahue Lane and quickly dissipates after 9am. Junction capacity analysis presented within this TTA report confirms that the junction will continue to function satisfactorily with the proposed development in place. Introducing traffic signals at this location, given the single-lane approaches, would likely generate unnecessary queuing and delays outside of peak periods and also introduce unnecessary signals maintenance issues for WCC. The problems associated with the potential upgrade of this junction to signal control are as shown in ***Figure 1.1*** below.

1.12 The applicant is willing to engage constructively with the local authority in addressing this matter and is agreeable to contributing towards any necessary works at this location. Such arrangements can be readily facilitated through the inclusion of an appropriately worded planning condition. Furthermore, a standard roads contribution will be payable in the event of a grant of permission, which addresses all general road infrastructure requirements.

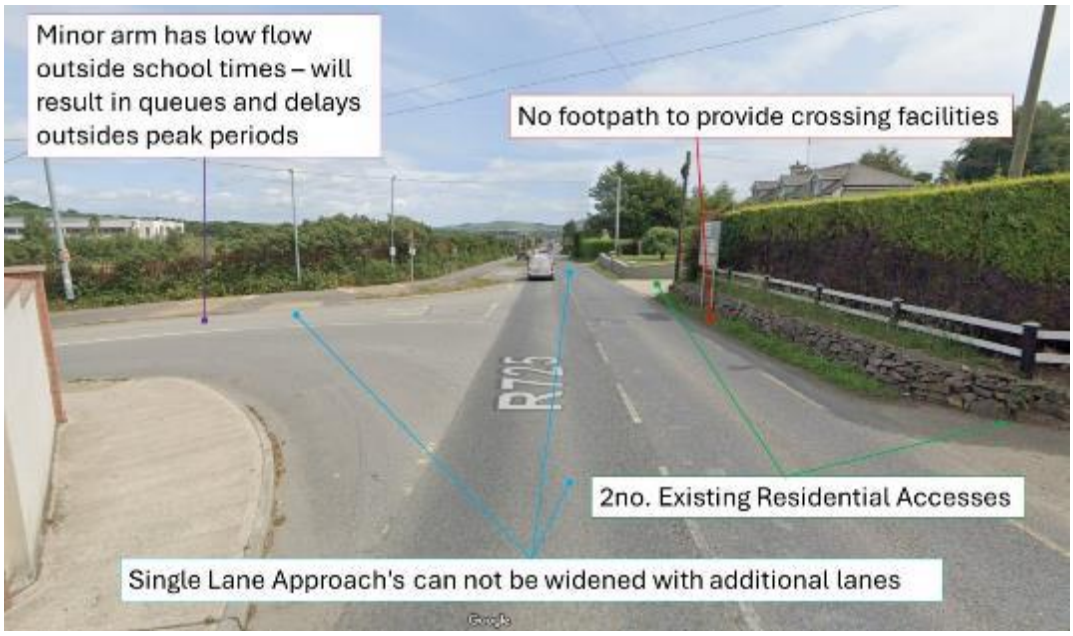

Figure 1.1: Problems with Upgrading the R725 Carnew Road / L10112 Kilnahue Lane to signal control

- R725 Right Hard turning pocket required- Details to be agreed with Roads Department

1.13 A ghost island junction, with a dedicated right hand turning pocket is now proposed on the R725. The proposed layout, as provided in ***Appendix A***, has been agreed in principle with Wexford County Council.

- Main Spine Road 6m - Secondary Roads 5.5m
- Road Construction in accordance with TIC Policy
- Auto turn required on all junctions and turning areas.
- Parking at Creche - Set Down Shown 7 Spaces - 1 Accessible – Set down Shown.
- Consideration should be given to the maximum car parking standards as set out on the Wexxford County Development Plan 2022 to 2028
- Controlled Crossing on Kilnahue Lane to link Development with Schools and existing footpath. Zebra Crossing with Belisha Beacons required on Kilnahue Lane - Details to be agreed with Roads Department
- All footpaths 2m & on both sides of the Roads and adjoining green areas.
- Raised Tables at junctions – uncontrolled crossing points & Traffic Calming
- Permeable paving private parking only, this may not be included in calculation of overall surface water management.
- Root management system required for trees proposed adjacent to the footpath or road.
- Electric Vehicle recharging points shall be provided in all driveways. At least 20% of public parking areas must be served by charging points and the remaining spaces must be culverted for future connection

1.14 All remaining issues raised by the local authority have been addressed in the road layout, as follows.

- The Main Spine road is proposed as 6.0m wide, with Secondary Roads 5.5m wide,
- Road Construction will be in accordance with TIC Policy,
- Autotracking has been provided by AKM as part of the submitted drawings,
- Parking has been provided at the creche, including 7no. spaces (1no. Accessible) and a set down area,
- Parking has been provided in accordance with maximum car parking standards as set out in the Wexford County Development Plan 2022-2028,
- A controlled Zebra Crossing has been provided on Kilnahue Lane which will link the development with the Schools,
- All footpaths are provided 2.0m wide,
- Raised tables have been provided on all internal road junctions,
- Permeable paving has been provided at private parking areas,
- Root management systems are proposed where footpaths are proposed close to trees,
- Electric Vehicle recharging points are proposed in all driveways. 20% of public parking area is provided with EV charging points with the remaining spaces ducted for future connection.

2.0 EXISTING CONDITIONS AND PROPOSED DEVELOPMENT

2.1 The proposed Large-Scale Residential Development (LRD) at Kilnahue, Gorey will provide 413 no. residential units, a creche, and all associated site development works including drainage, landscaping, and parking.

2.2 The site is bound to the north and west by undeveloped lands currently in agricultural use, to the east by the L10112 Kilnahue Lane and to the south by the R725 Carnew Road.

Existing Road Network

2.3 **R725 Carnew Road** – this is a regional road connecting Gorey to Carnew, Tullow and Carlow Town to the west. It consists of a single carriageway road. The proposed site access location within the 60km/h urban speed limit area of Gorey Town. There are presently no dedicated pedestrian or cycling facilities provided at the point of the proposed site access, but it is proposed to extend the pedestrian footpath to the site, as part of the development works.



Figure 2.1: R725 Carnew Road at the Site (View from West – Google Maps)



Figure 2.2: R725 Carnew Road at the Site (View from East – Google Maps)

2.4 **L10112 Kilnahue Lane** – is a narrow local road connecting Gorey to rural areas to the north. The road width is narrow, approximately 5.0m wide. While the site access junction locations are within the 80km/hr speed limit, the 50km/hr speed limit is located a short distance to the south of the proposed development.



Figure 2.3: L10112 Kilnahue Lane at the Site (View from South – Google Maps)

2.5 Kilnahue Lane widens to the south of the proposed site, with a wide pedestrian and cycle facilities provided adjacent to the two schools located to the east of Kilnahue Lane, as shown in ***Figure 2.4***.



Figure 2.4: L10112 Kilnahue Lane at the Gorey Educate Together National School

2.6 **Site 1: R725 Carnew Road / L10112 Kilnahue Lane Priority Junction:** This priority junction has twice recently been upgraded, first in 2009 as part of the improvement in pedestrian and cycle access works for the nearby schools, and again in 2018 with the provision of a footpath to the west of the junction on the northern side of the junction. The Carnew Road is a two-way single carriageway road, with a one lane approach from Kilnahue Lane. Pedestrian footpaths are provided on the northern side of the junction, and an off-road cycle track on the eastern and northern arms of the junction, connecting the schools to the north. As highlighted in the traffic surveys, the junction is at its busiest in the AM peak, with traffic accessing the two schools to the north.



Figure 2.5: Carnew Road / L10112 Kilnahue Lane Priority Junction (View from East – Google Maps)

2.7 **Site 2: R725 Carnew Road / Woodbury Mini-Roundabout Junction**. This a 3-arm mini-roundabout junction. The junction was upgraded from its original layout as a priority – T-Junction. Pedestrian footpaths are provided on all arms of the junction. On-Road cycle lanes are provided on the Woodbury arm of the junction, although these are not continued on the Carnew Road. The Woodbury arm of the junction serves as a link to residential areas in the north-west of Gorey and provides access to Creagh College.



Figure 2.6: R725 Carnew Road / Woodbury Mini-Roundabout Junction (View from East – Google Maps)

2.8 **Site 3: R725 Grattan Row / R772 McCurtain Street / R772 Enniscorthy Road Gyratory**. This junction has also been subject to recent upgrades in Gorey, incorporating a one-way system to the west and north of the 1798 Gorey Hill Monument. The section of the R725 west of the monument now operates as northbound only, with traffic from the Enniscorthy Road entering via an entry-only junction onto the R725. Conversely, McCurtain Street operates as eastbound only, allowing traffic from the R725 to exit towards the Enniscorthy Road through an exit-only junction. As a result, two new junctions have been introduced, an entry-only junction and an exit-only junction, replacing the former full-movement junctions and thereby improving overall traffic flow and operational efficiency.



Figure 2.7: R772 McCurtain Street / R772 Enniscorthy Road Exit Only Junction

(View from East – Google Maps)



Figure 2.8: R772 Enniscorthy Road / R725 Grattan Row Entry Only Junction (View from West – Google Maps)

2.9 **Site 4: Existing R772 Enniscorthy Road / L1038 Roundabout Junction.** This is a 3-arm 35m ICD roundabout. The northern R772 and the southern L1038 approaches both consists of a flared two lanes, while the western approach has a single lane. Footpaths are provided on all arms, with zebra crossings provided on the northern and southern arms of the junction. Off-road cycle lanes are provided on the southern L1038 arm of the junction.



Figure 2.9: Existing R772 Enniscorthy Road / L1038 Roundabout Junction (View from West – Google Maps)

2.10 The location of these local road network junctions are highlighted in ***Figure 2.10*** below.



Figure 2.10: Local Network Junctions

Existing Traffic Conditions

2.11 Observation indicates that, like the vast majority of roads in or on the approach to successful town centre environments, there was some short duration peak commuter period traffic during the AM peak. This is typical in any urban road network during peak periods.

2.12 The majority of the AM peak traffic locally appears to be from the three schools located in close proximity to the proposed site. Gorey Educate Together National School (c. 400 students), opened in 2005, is accessed via Kilnahue Lane, while the Gaelscoil Moshíológ (c. 200 students), officially opened in 2016, is co-located on Kilnahue Lane. The post-primary level, Creagh College (c. 700 students), opened in 2011, is a purpose-built campus accessed via Woodbury, as shown in ***Figure 2.11***.

2.13 During the morning peak hour (8am – 9am), approximately 430 vehicles were recorded accessing Kilnahue Lane, the majority of which are likely associated with school-related trips. During the evening peak hour (5pm – 6pm), this volume decreased significantly to 53 vehicles, reflecting the conclusion of all classes at the two schools prior to 3pm.

2.14 Woodbury also likely sees significant school-related trips during the AM peak (8am – 9am), where approximately 900 vehicles were recorded accessing Woodbury, a significant number likely associated with school-related trips. During the evening peak hour (5pm – 6pm), this volume decreased significantly to 567 vehicles (a c.40% reduction), reflecting the conclusion of all classes at Creagh College prior to 4pm.



Figure 2.11: Local School Locations

Access Proposals

2.15 Vehicular access to the proposed development will be provided via three junctions: a ghost-island priority junction on the R725 Carnew Road and two smaller DMURS-compliant junctions on Kilnahue Lane. The primary access will comprise a ghost-island junction on Carnew Road incorporating a dedicated right-turn lane (refer to drawings in ***Appendix A***). Two secondary access points are proposed on the L10112 Kilnahue Lane, which in turn connects to the R725 to the south.

2.16 It is proposed to provide a ghost island priority junction onto Carnew Road at an appropriate point where there is no impediment to achieving the required sightline or stopping sight distance. The proposed junction layout is shown below in ***Figure 2.12***, with Drawing NRB-TA-001, provided in ***Appendix A***. It is proposed to extend the existing footpath along the northern side of the R725 Carnew Road, adjacent to the site boundary, to provide a continuous pedestrian link connecting future residents with Gorey Town Centre.



Figure 2.12: Proposed R725 Carnew Road Site Access Junction (TA-007-01)

2.17 The proposed site access is on the R725 Carnew Road. Based on the Traffic Survey, in terms of Link Capacity, Carnew Road at the site can be described as moderately trafficked, with a weekday AM commuter Peak Hour (8-9am) 2-Way flow of approximately 647 Passenger Car Units (PCUs or car-equivalents), and a PM Peak Hr (5-6pm) 2-Way flow of 589 PCUs (both measured at the site access location). In these terms, it is described as moderately trafficked.

2.18 To put the measured traffic flows on Carnew Road at the site in context, a road such as this has a free flow link capacity of c 1,500-1,800 PCUs per-direction per-hour (or a 2-way link capacity of between 3,000 & 3,600 PCUs). So, based on this evidence, Carnew Road at the site is moderately trafficked, as it is carrying approximately 20-30% of its link capacity. It is accepted that the capacity of any road or link on the approach to any urban area is limited by the capacity of junctions along its length.

2.19 Two smaller DMURS-compliant junctions on are proposed on Kilnahue Lane, are shown in ***Figure 2.13*** below. It is proposed to widen Kilnahue Lane adjacent to the site, providing a 5.5m wide road carriageway. A 4.0m wide shared pedestrian / cycle route is proposed adjacent and parallel to Kilnahue Lane, which will link to the existing pedestrian and cycle facilities to the south along by Gorey Educate Together National School via a raised crossing on Kilnahue Lane.



Figure 2.13: Proposed Kilnahue Lane Site Access and Pedestrian & Cycle Facilities (TA-001)

Proposed Development

2.20 The Proposed Development comprises a Residential Scheme at Kilnahue, Wexford, with a total 413 no. Residential Units. The proposed development with vehicular access from Carnew Road (R725) and construction of 349no. houses and 64 no. apartments (including 134 no. 2-bedroom houses, 176 no. 3-bedroom houses; 39 no. 4-bedroom houses; 36 no. 1-bedroom apartments / maisonettes; 28 no. 3-bedroom apartments). The development includes a creche (509.9 sqm), all associated car/ bicycle parking, provision of internal access roads, paths, bin & bicycle stores, substation, SuDs surface water drainage infrastructure, all ancillary site development, landscaping, and boundary treatment works.

2.21 An extract from the Architects Ground Floor Layout plan is included below as ***Figure 2.14***.

2.22 The proposed development incorporates a comprehensive package of high-quality pedestrian and cycle infrastructure, including a 4.0 m shared pedestrian/cycle route along Kilnahue Lane, an extension of the existing R725 footpath to the site boundary, and a new raised zebra crossing providing safe access to nearby schools. These measures significantly enhance connectivity and active travel permeability, making walking and cycling safe, direct and attractive options for residents. Collectively, these facilities are expected to encourage a modal shift away from private car use towards more sustainable modes of transport, consistent with DMURS and national sustainable mobility objectives.



Figure 2.14 – Extract Architects GF Layout Plan (Refer Appendix A)

3.0 TRIP GENERATION, ASSIGNMENT & DISTRIBUTION

3.1 The Trip Rate Information Computer System (TRICS) database is **ordinarily** used to ascertain vehicular trip generation associated with the use of any particular site. This represents industry-standard practice for Traffic and Transport Assessments in Ireland, and is indeed the recommended assessment methodology within the TII Guidelines for Traffic & Transport Assessment. In this case the worst-case TRICS assessment has been undertaken based on the licensed version of TRICS, specifically selecting **Irish Residential Housing** sites for assessment purposes, and including Residential Apartments and a Creche.

3.2 A robust and onerous assessment has been undertaken of the impact on the immediate local network as described above, in order to ensure that we thoroughly assess the effect of the development, in terms of stress testing the road capacity impact of the scheme on the local links (conscious that the site represents development on zoned residential lands on an accessible site within the urban area).

3.3 The TRICS assessment output for the subject site is included herein as ***Appendix C*** (Irish Residential Housing Surveys only). The resulting Total Trip Rates applied based on TRICS are as set out below as ***Table 3.1***.

Table 3.1; - Traffic Generation by Proposed Development based on TRICS Database

349 Residential Houses	**Arrivals (PCU)**		**Departs (PCU)**		**2-Way**
Network Period	**Per**	**Dev**	**Per**	**Dev**	
Weekday AM Peak Hr 8-9	0.202	70	0.568	198	269
Weekday PM Peak Hr 5-6	0.488	170	0.311	109	279
24 Hour Day	3.281	1145	3.463	1209	2354
64 Resi Apartments	**Arrivals (PCU)**		**Departs (PCU)**		**2-Way**
Network Period	**Per**	**Dev**	**Per**	**Dev**	
Weekday AM Peak Hr 8-9	0.087	6	0.141	9	15
Weekday PM Peak Hr 5-6	0.196	13	0.185	12	24
24 Hour Day	1.500	96	1.685	108	204
510m² GFA Creche	**Arrivals (PCU)**		**Departs (PCU)**		**2-Way**
Network Period	**Per**	**Dev**	**Per**	**Dev**	
Weekday AM Peak Hr 8-9	3.184	18	3.412	19	38
Weekday PM Peak Hr 5-6	2.805	16	4.246	24	40
24 Hour Day	17.588	100	17.515	100	200
TOTAL TRAFFIC GENERATED - WORST CASE*					
Network Period	**Arrivals (PCU)**		**Departs (PCU)**		**2-Way**
Weekday AM Peak Hr 8-9	80		211		291
Weekday PM Peak Hr 5-6	186		125		311
24 Hour Day	1241		1316		2558
**Creche Trips are Discounted by 80% to Reflect Internal Traffic / Uses, being a normal approach*					

3.4 The above Assessment confirms that the proposed development generates a total 2-way Traffic Flow of 291 PCUs in the AM Peak Hour and 311 PCUs in the PM Peak Hour. Being a flow of just over 5 car per minutes in each of the commuter peak hours, this represents a low volume of traffic.

Assignment/Distribution - Future Year Traffic

3.5 We have used hand assignment techniques based on the observed proportions and established flows at the adjacent R725 / L10112 junction, with the worst-case traffic assigned to the roads based on these existing traffic patterns and junction turning proportions. This represents industry-standard best practice and reflects an established gravity-model based distribution method.

3.6 The standard methodology applied was to firstly ascertain the base background traffic conditions for both the weekday AM and weekday PM Commuter Peak periods. To this end we commissioned a 2025 Traffic Survey of the existing affected roads and junctions in order to establish base background traffic conditions. Details of the traffic surveys are included as ***Appendix B*** and are reproduced as commuter peak hour Network Flow Diagrams as ***Appendix D***.

3.7 We then used the TII PE-PAG-02017 Project Appraisal Guidelines for National Roads Unit 5.3 (Travel Demand Projections, Table 6.2: Central Growth Rates: Annual Growth Factors), to establish projected occupation/opening year 2028 and design year 2043 traffic conditions 15 years following opening on the local road network. This is the standard method of predicting future year traffic growth on Roads

3.8 It should be noted that we have selected these Opening/Completion years as being reasonable and appropriate, however, varying the opening year or the design years by 1-5 years, if required for any reason, would have no significant impact upon the conclusions of the study (given the low annual TII growth rates now applicable).

3.9 Calculations of the relevant growth factors are included in ***Table 3.2*** below (based on tabulated 'medium growth' in the Wexford Area).

Table 3.2 - Traffic Growth Rates, TII Project Appraisal Guidelines

Year	to Year	Growth Factor
Surveyed	2028	1.021
2028	2043	1.038

3.10 The resulting Traffic Flow Projections and Figures allowed the assessment of impact of the development to be undertaken, all as set out in ***Appendix D.***

4.0 TRAFFIC IMPACT - TRAFFIC CAPACITY RESULTS

4.1 The TII Traffic and Transport Assessment Guidelines sets out a mechanism for assessment of developments of this nature, in determining whether further assessment is indeed required and whether an impact is considered significant and needs further assessment. The TII Traffic and Transport Assessment Guidelines suggests a Threshold Assessment of the impact on the local roads should be provided in order to determine whether further, more detailed modelling and assessment of particular critical junctions or links is necessary. In the case of a residential development sustainably located in close distance of a town within the 60km/h urban area, such as in this case, it can be considered inappropriate and unnecessary to 'chase' development traffic through junctions remote from the sites sustainable location.

4.2 In particular, modern thinking is that residential development within or close to town centres such as proposed here will provide for alternatives to the private car and will reduce the need to travel by car.

4.3 The recommendation is that the Threshold level is set at 10% for uncongested situations, which would considered to be appropriate for the lightly trafficked streets here.

4.4 To set the increases in traffic flow in context, the day-to-day variation in traffic volumes due to variables such as day-of-week, or weather conditions, is accepted as being 10%, so in this context small increases in traffic can pass wholly unnoticed. We have indicated the worst-case traffic increases on a 'Network Flow Diagram' on Page 6 of ***Appendix D***, with the specific impact on the adjacent key junctions summarised below as ***Table 4.1***.

Table 4.1; - Threshold Assessment - Weekday AM/PM Peak Hours Entire Development.

Assessed Road or Junction	Traffic Increase %		COMMENT
	AM Pk Hr	PM Pk Hr	
Proposed R725 Site Access Junction	NA	NA	Junction Modelled using TII Approved Software
Proposed L10112 Northern Site Access Junction	NA	NA	Junction Modelled using TII Approved Software
Proposed L10112 Southern Site Access Junction	NA	NA	Junction Modelled using TII Approved Software
Existing R725 / L10112 Priority Junction	28%	48%	>10% therefore Further Analysis Required
Existing R725 / Woodbury Mini-Roundabout Junction	18%	28%	>10% therefore Further Analysis Required
Existing R725 - R772 Exit Only	17%	23%	>10% therefore Further Analysis Required
Existing R725 - R772 Access Only	17%	23%	>10% therefore Further Analysis Required
Existing R772 - L1038 Roundabout Junction	4.9%	6.0%	<10% therefore no further analysis required

4.5 We have undertaken detailed modelling and assessment of the network junctions in order to confirm adequacy. The junctions has been assessed using the TII-approved TRL Modelling Software Package *Junctions 10*-PICADY (**P**riority **I**ntersection **C**apacity **A**nd **D**ela**Y**). This package enables the user to predict the capacity, queues and delays at priority-controlled junctions.

4.6 We have used the TII-approved software package 'Junctions 10' ARCADY' (**A**ssessment of **R**oundabout **C**apacity **A**nd **D**elay) software package (as part of the TRL Package 'Junction 10') to assess the capacity of the mini-roundabout junction. ARCADY produces results based on a ratio of flow to capacity (RFC) and queue length.

4.7 The outputs from the software present RFC (Ratio of Flow to Capacity) and queue lengths as indicators of the operational efficiency of the specific junction.

Modelled Junctions – Capacity Assessment

4.8 We have appended the detailed computer simulation model results of the capacity modelling for the proposed junctions, as ***Appendix E to Appendix K*** with comment on the Appendix Cover Sheets. A summary of the results is reproduced below, as ***Tables 4.2 to 4.8***.

Table 4.2: Capacity Assessment of Proposed R725 Site Access, Priority Controlled Junction (Full Results Appendix E)

Modelled Year & Scenario	Period "Mean-Max" Q (PCUs)	Period Max RFC
2028 Opening Year AM Peak Hr 8-9	0.3	0.21
2028 Opening Year PM Peak Hr 5-6	0.2	0.17
2043 Design Year AM Peak Hr 8-9	0.3	0.21
2043 Design Year PM Peak Hr 5-6	0.2	0.17

Table 4.3: Capacity Assessment of Proposed Northern L10112 Site Access, Priority Controlled Junction (Full Results Appendix F)

Modelled Year & Scenario	Period "Mean-Max" Q (PCUs)	Period Max RFC
2028 Opening Year AM Peak Hr 8-9	0.2	0.14
2028 Opening Year PM Peak Hr 5-6	0.1	0.07
2043 Design Year AM Peak Hr 8-9	0.2	0.14
2043 Design Year PM Peak Hr 5-6	0.1	0.07

Table 4.4: Capacity Assessment of Proposed Southern L10112 Site Access, Priority Controlled Junction (Full Results Appendix G)

Modelled Year & Scenario	Period "Mean-Max" Q (PCUs)	Period Max RFC
2028 Opening Year AM Peak Hr 8-9	0.1	0.12
2028 Opening Year PM Peak Hr 5-6	0.1	0.07
2043 Design Year AM Peak Hr 8-9	0.1	0.12
2043 Design Year PM Peak Hr 5-6	0.1	0.07

Table 4.5: Capacity Assessment of Existing R725 / L10112, Priority Controlled Junction (Full Results Appendix H)

Modelled Year & Scenario	Period "Mean-Max" Q (PCUs)	Period Max RFC
2028 Opening Year AM Peak Hr 8-9	3.2	0.71
2028 Opening Year PM Peak Hr 5-6	0.8	0.31
2043 Design Year AM Peak Hr 8-9	3.8	0.75
2043 Design Year PM Peak Hr 5-6	0.8	0.32

Table 4.6: Capacity Assessment of Existing R725 / Woodbury, Mini-Roundabout Junction (Full Results Appendix I)

Modelled Year & Scenario	Period "Mean-Max" Q (PCUs)	Period Max RFC
2028 Opening Year AM Peak Hr 8-9	5.0	0.84
2028 Opening Year PM Peak Hr 5-6	2.6	0.73
2043 Design Year AM Peak Hr 8-9	6.1	0.87
2043 Design Year PM Peak Hr 5-6	2.9	0.75

Table 4.7: Capacity Assessment of Existing R772 McCurtain Street / R772 Enniscorthy Road Exit Only Junction, Priority Controlled Junction (Full Results Appendix J)

Modelled Year & Scenario	Period "Mean-Max" Q (PCUs)	Period Max RFC
2028 Opening Year AM Peak Hr 8-9	8.6	0.93
2028 Opening Year PM Peak Hr 5-6	1.7	0.64
2043 Design Year AM Peak Hr 8-9	12.1	0.97
2043 Design Year PM Peak Hr 5-6	1.9	0.66

Table 4.8: Capacity Assessment of R772 Enniscorthy Road / R725 Grattan Row Entry Only Junction, Priority Controlled Junction (Full Results Appendix K)

Modelled Year & Scenario	Period "Mean-Max" Q (PCUs)	Period Max RFC
2028 Opening Year AM Peak Hr 8-9	1.7	0.56
2028 Opening Year PM Peak Hr 5-6	4.8	0.80
2043 Design Year AM Peak Hr 8-9	1.9	0.59
2043 Design Year PM Peak Hr 5-6	5.7	0.82

4.9 The results of the modelling clearly show that the road network junctions will have more than adequate capacity to accommodate the worst case traffic associated with the entire proposed development on the site. Indeed it should be noted that in the case of the proposed site access junctions in particular the RFCs and Queue Lengths are very low, highlighting the reserve capacity that remains.

Summary of Results/Analysis

4.10 The above analyses confirms that the completion and occupation of the proposed development will have an acceptable impact upon the capacity and safety of the road network in the area, and the associated traffic effects can easily be accommodated with the subject development in place. Two junctions, the Existing R725 / Woodbury, Mini-Roundabout Junction and the Existing R772 McCurtain Street / R772 Enniscorthy Road Exit Only Junction are approaching capacity but within acceptable operational limits.

5.0 CONCLUSIONS

5.1 NRB Consulting Engineers Ltd were appointed to prepare a Traffic & Transport Assessment Report associated with a planning application for a 413 no. Unit Large Scale Residential Development (LRD), including a Creche at Kilnahue, Gorey, Co Wexford.

5.2 This TTA has been prepared to address the Traffic/Transportation issues and Traffic Impact associated with the proposal, and specifically the impact upon the capacity of the existing adjacent road network.

5.3 The Report has been prepared in accordance with the TII Traffic & Transport Assessment Guidelines, and is based on industry-standard Trip Generation Rates established using the most up to date version of the TRICS Database

5.4 We commissioned and undertook new traffic surveys of the adjacent road network during February 2025 when schools were fully open. This traffic survey data formed the basis of the study.

5.5 Conscious that this is a small development in traffic terms considering the traffic flows locally, the assessment focuses on the capacity and safety of the proposed site access junctions and the impact upon the road network itself. The Report has been prepared fully in accordance with TII's Traffic & Transport Assessment Guidelines and addresses the worst-case traffic impact of the proposal.

5.6 The Traffic & Transport Assessment confirms that the established existing road network, and the proposed development access junctions, are more than adequate to accommodate the worst-case traffic associated with the development.

5.7 The assessment confirms that the full occupation of the scheme will have a negligible and unnoticeable impact upon the operation of the adjacent road network.

5.8 A Statement of Consistency with DMURS has also been prepared, which confirms that the internal layout is compliant with the DMURS requirements, and this is included as a separate report as ***Appendix L***. A planning stage Construction Traffic Management Plan has been provided as ***Appendix M***. An independent Stage 1 Road Safety / Quality Audit of the plans and the adjacent road network, together with the Designer Feedback form, has been undertaken and is included as a separate report as ***Appendix N***.

5.9 Based on our studies, we conclude that there are no adverse or significant traffic/transport capacity or operational issues associated with the proposed high quality Residential Development which would prevent planning permission being granted by Wexford County Council.

APPENDICES - CONTENT

A	Proposed Development – Site Layout Plans/Access Arrangement
B	Traffic Survey Output Data
C	TRICS Output Data Sheets (Residential Housing / Apartments and Creche)
D	Traffic Calculations, Trip Distribution, Network Traffic Flow Diagrams & Projections
E	PiCADY Capacity Modelling – R725 Site Access Ghost Island Junction
F	PiCADY Capacity Modelling – L10112 Northern Site Access T-Junction
G	PiCADY Capacity Modelling – L10112 Southern Site Access T- Junction
H	PiCADY Capacity Modelling – Existing R725 / L10112 T- Junction
I	ARCADY Capacity Modelling – Existing R725 / Woodbury Mini-Roundabout Junction
J	PiCADY Capacity Modelling – Existing R725 / R772 Exit Only T- Junction
K	PiCADY Capacity Modelling – Existing R725 / R772 Access Only T- Junction
L	DMURS Statement of Consistency Report
M	Planning Stage Construction Traffic Management Plan
N	Stage 1 Road Safety/Quality Audit (& Designers Feedback Form)

APPENDIX A

Proposed Development
Site Layout Plans/Site Access Arrangement

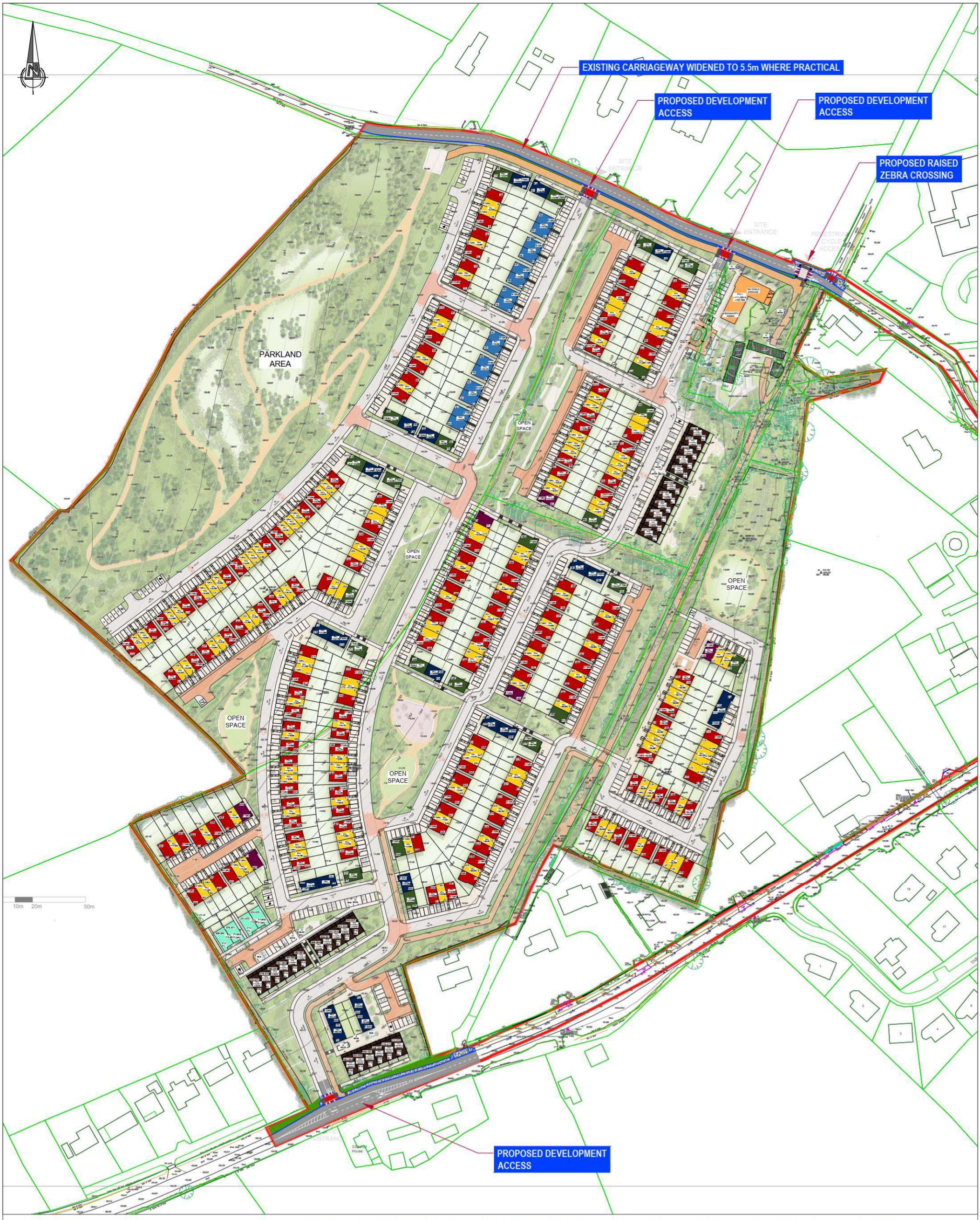

NRB Consulting Engineers Ltd recommend that Road and land ownership boundaries are verified through Legal & Land searches by the Client.
This drawing is based upon 24058_P_004 SITE PLAN 2025.11.06, received 06/11/25. NRB Consulting Engineers Ltd shall not be liable for any inaccuracies or deficiencies.

REV	DATE	AMENDMENTS	DRAWN	CHK	APP

NRB Consulting Engineers Ltd
5th Floor
40 Mespil Road
Dublin 4
D04 C2N4

Phone: +353 1 292 1941
Email: info@nrb.ie
Web: www.nrb.ie
Registered in Ireland No. 491679

COPYRIGHT © RESERVED

Client

Project: Gorey LRD
Wexford

Title: Proposed Site Layout

Project No.: 25-030

Drawing No.: NRB-TA-001

Drawn: PB

Checked: BMcM 04/12/25

Approved: BMcM 04/12/25

Date: 4-Dec-25

Scale @ A3: 1:2000

Rev: A

NRB Consulting Engineers Ltd accept no responsibility for any unauthorised amendments to this drawing. Only figured dimensions to be worked to.

Purpose of Issue: ☐ Draft ☐ Information ☐ Approval ☐ As Built ☐ Tender ☐ Construction

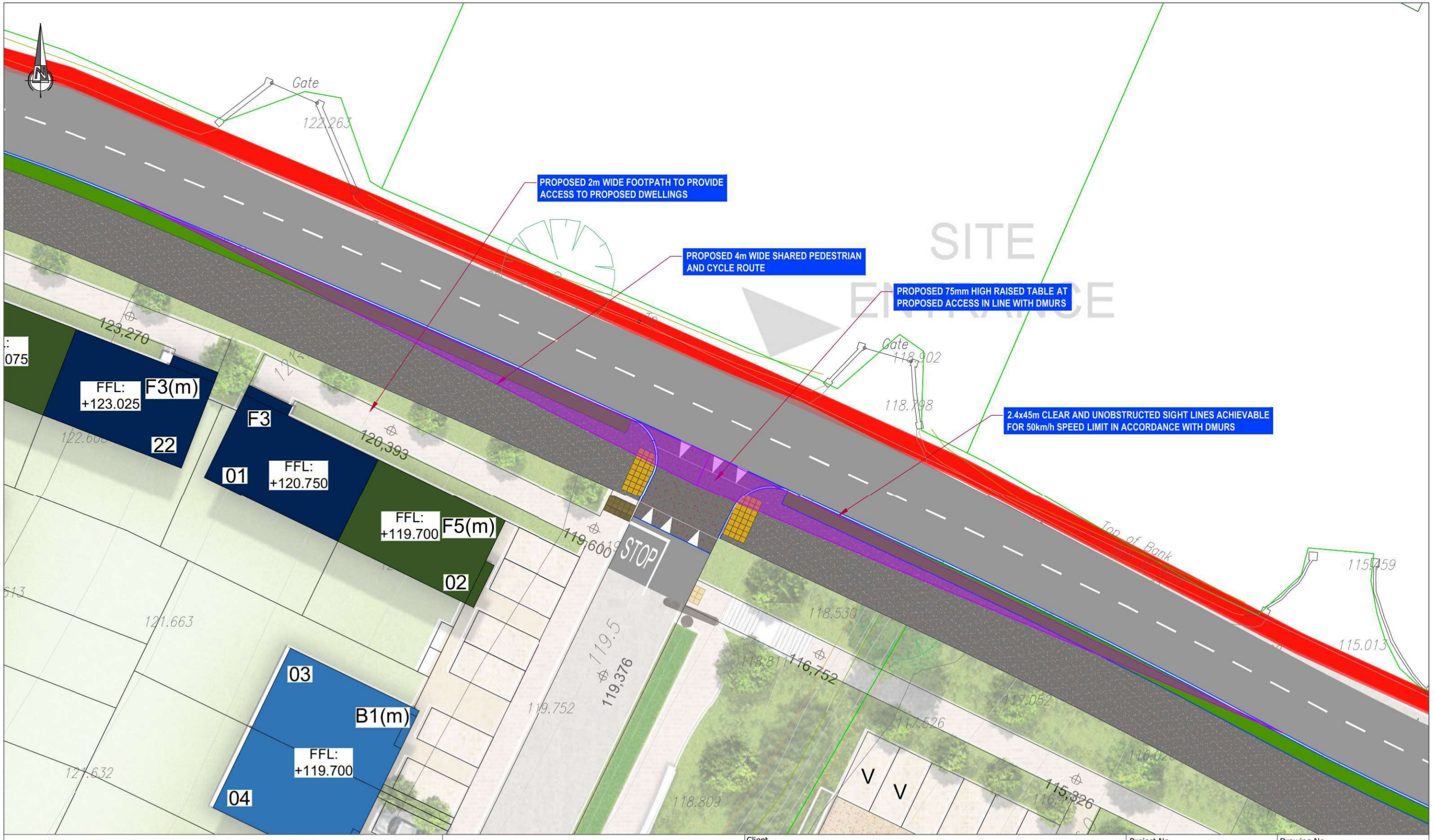

NRB Consulting Engineers Ltd recommend that Road and land ownership boundaries are verified through Legal & Land searches by the Client.
This drawing is based upon 24058_P_004 SITE PLAN 2025.11.06, received 06/11/25. NRB Consulting Engineers Ltd shall not be liable for any inaccuracies or deficiencies.

REV	DATE	AMENDMENTS	DRAWN	CHK	APP

NRB Consulting Engineers Ltd
5th Floor
40 Mespil Road
Dublin 4
D04 C2N4

Phone/Fax: +353 1 292 1941
Email: info@nrb.ie
Web: www.nrb.ie
Registered in Ireland No. 491679

NRB consulting engineers

COPYRIGHT © RESERVED

Client		Project No. 25-030	Drawing No. NRB-TA-002
Project	Gorey LRD Wexford	Drawn PB / Checked BMcM 04/12/25	Approved BMcM 04/12/25
Title	Proposed Site Access 01 Layout	Date 4-Dec-25	Scale @ A3 1:250 / Rev A

NRB Consulting Engineers Ltd accept no responsibility for any unauthorised amendments to this drawing. Only figured dimensions to be worked to.

Purpose of Issue: ☐ Draft ☐ Information ☐ Approval ☐ As Built ☐ Tender ☐ Construction

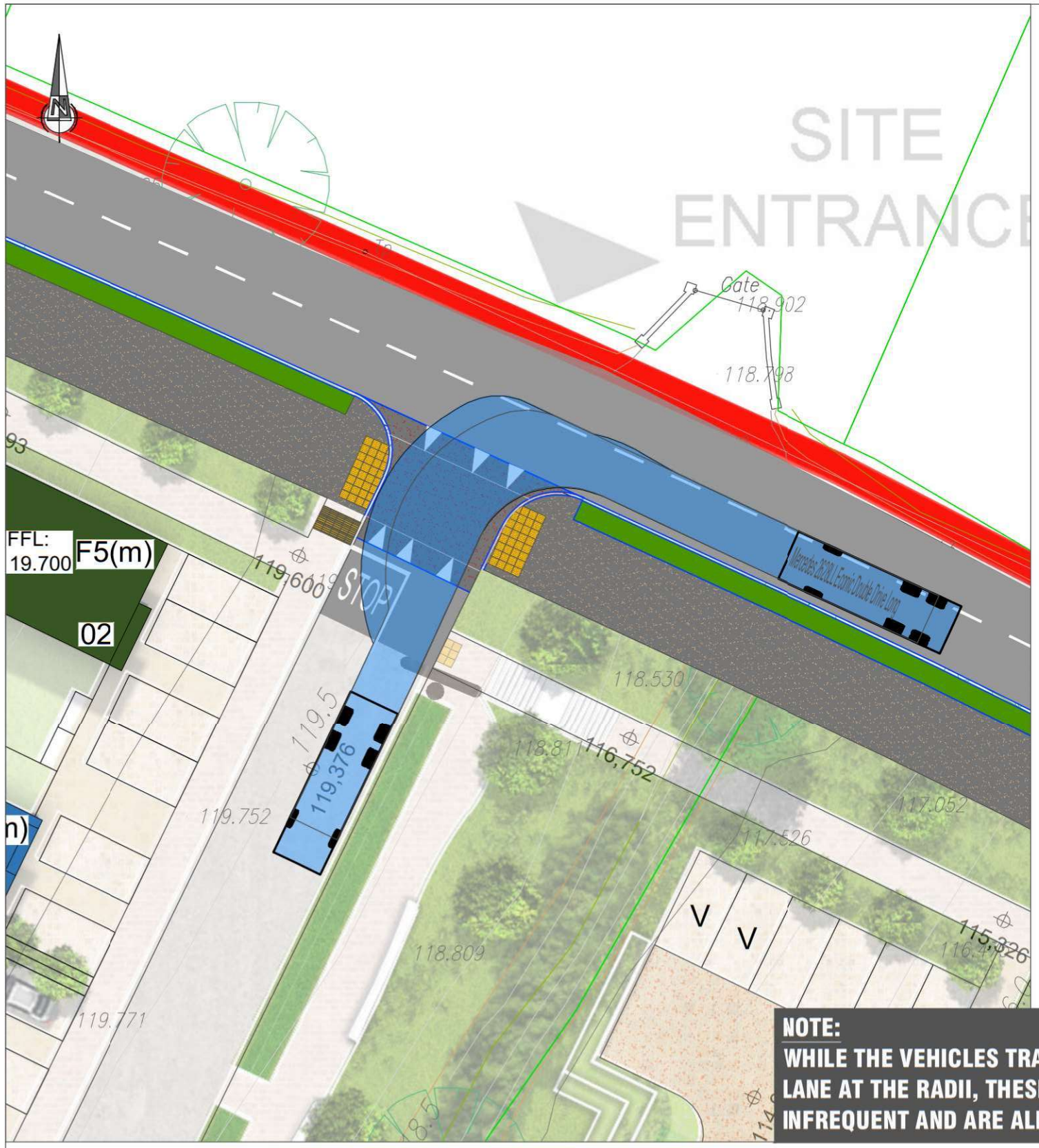

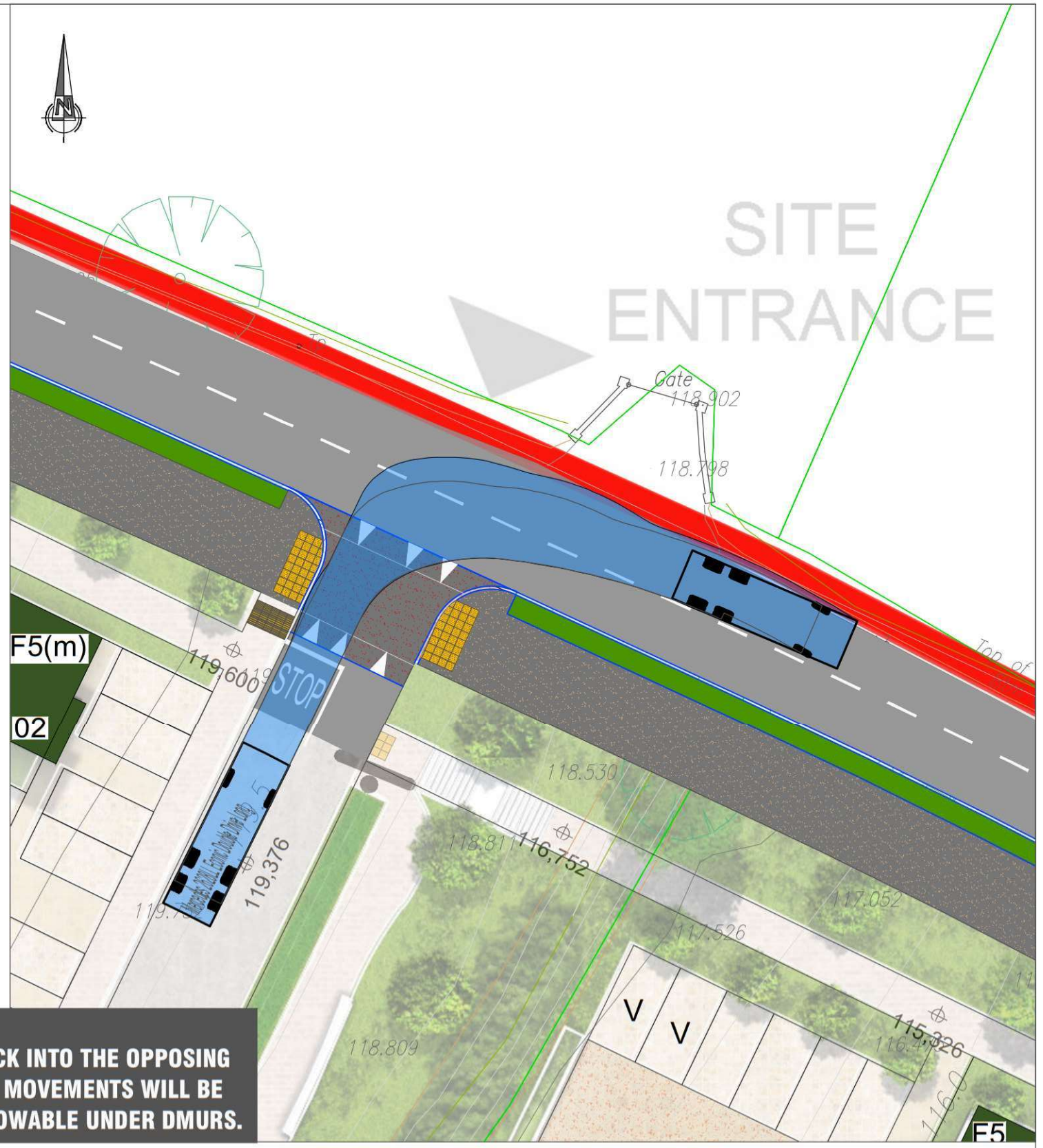

NOTE:
WHILE THE VEHICLES TRACK INTO THE OPPOSING LANE AT THE RADII, THESE MOVEMENTS WILL BE INFREQUENT AND ARE ALLOWABLE UNDER DMURS.

AUTOTRACK OF A REFUSE VEHICLE ENTERING

AUTOTRACK OF A REFUSE VEHICLE EXITING

NRB Consulting Engineers Ltd recommend that Road and land ownership boundaries are verified through Legal & Land searches by the Client.
This drawing is based upon 24058_P_004 SITE PLAN 2025.11.06, received 06/11/25. NRB Consulting Engineers Ltd shall not be liable for any inaccuracies or deficiencies.

REV	DATE	AMENDMENTS	DRAWN	CHK	APP

NRB Consulting Engineers Ltd
5th Floor
40 Mespil Road
Dublin 4
D04 C2N4

Phone/Fax: +353 1 292 1941
Email: info@nrb.ie
Web: www.nrb.ie
Registered in Ireland No. 491679

NRB consulting engineers

COPYRIGHT © RESERVED

Client		Project No. 25-030	Drawing No. NRB-TA-003
Project	Gorey LRD Wexford	Drawn PB / Checked BMcM 04/12/25	Approved BMcM 04/12/25
Title	Proposed Site Access 01 Refuse Vehicle Tracks	Date 4-Dec-25	Scale @ A3 1:250 / Rev A

NRB Consulting Engineers Ltd accept no responsibility for any unauthorised amendments to this drawing. Only figured dimensions to be worked to.

Purpose of Issue: ☐ Draft ☐ Information ☐ Approval ☐ As Built ☐ Tender ☐ Construction

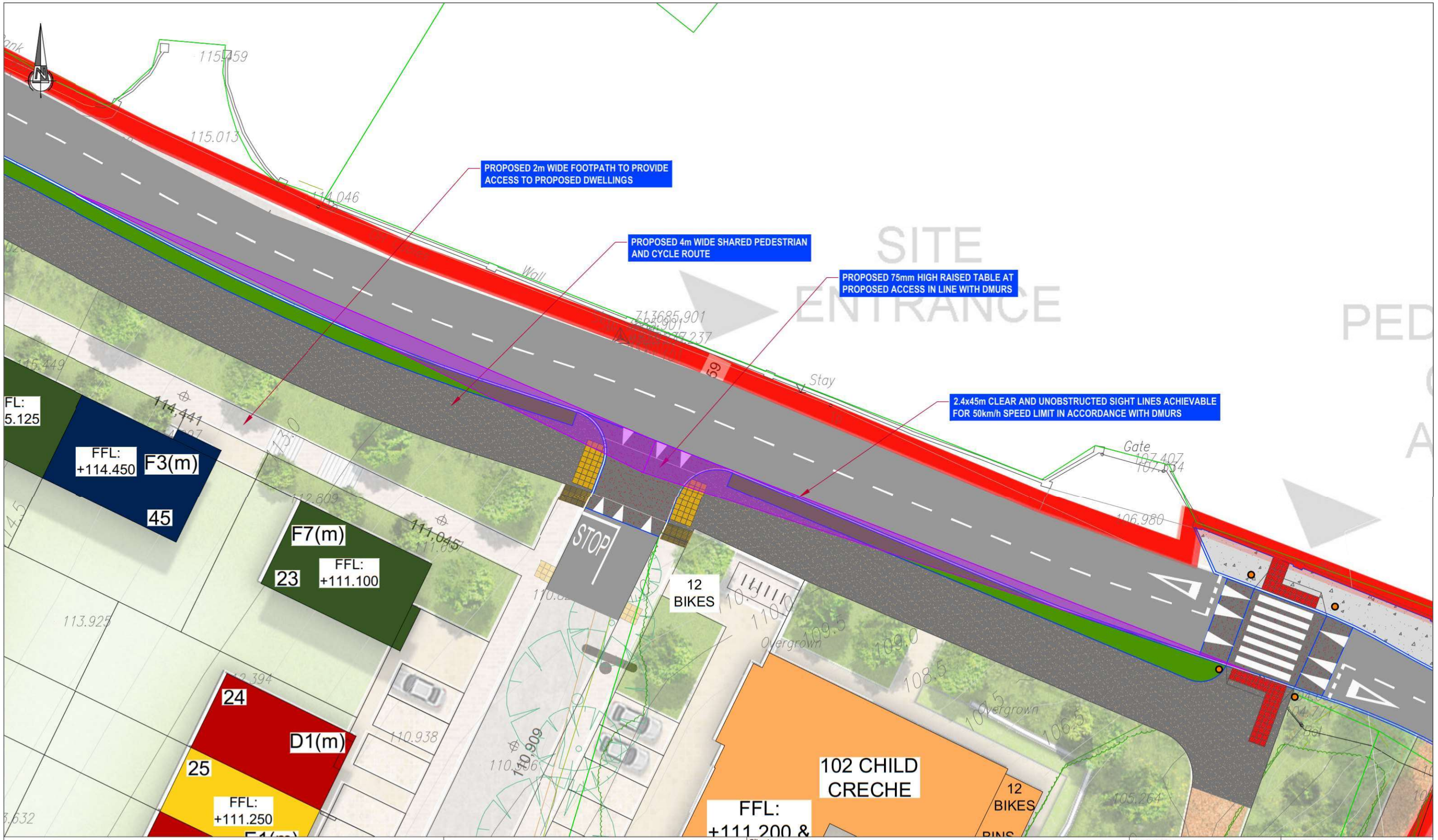

NRB Consulting Engineers Ltd recommend that Road and land ownership boundaries are verified through Legal & Land searches by the Client.
This drawing is based upon 24058_P_004 SITE PLAN 2025.11.06, received 06/11/25. NRB Consulting Engineers Ltd shall not be liable for any inaccuracies or deficiencies.

REV	DATE	AMENDMENTS	DRAWN	CHK	APP

NRB Consulting Engineers Ltd
5th Floor
40 Mespil Road
Dublin 4
D04 C2N4

Phone/Fax: +353 1 292 1941
Email: info@nrb.ie
Web: www.nrb.ie
Registered in Ireland No. 491679

NRB consulting engineers

COPYRIGHT © RESERVED

Client		Project No. 25-030	Drawing No. NRB-TA-004
Project	Gorey LRD Wexford	Drawn PB / Checked BMcM 04/12/25 / Approved BMcM 04/12/25	
Title	Proposed Site Access 02 Layout	Date 4-Dec-25	Scale @ A3 1:250 / Rev A

NRB Consulting Engineers Ltd accept no responsibility for any unauthorised amendments to this drawing. Only figured dimensions to be worked to.

Purpose of Issue: ☐ Draft ☐ Information ☐ Approval ☐ As Built ☐ Tender ☐ Construction

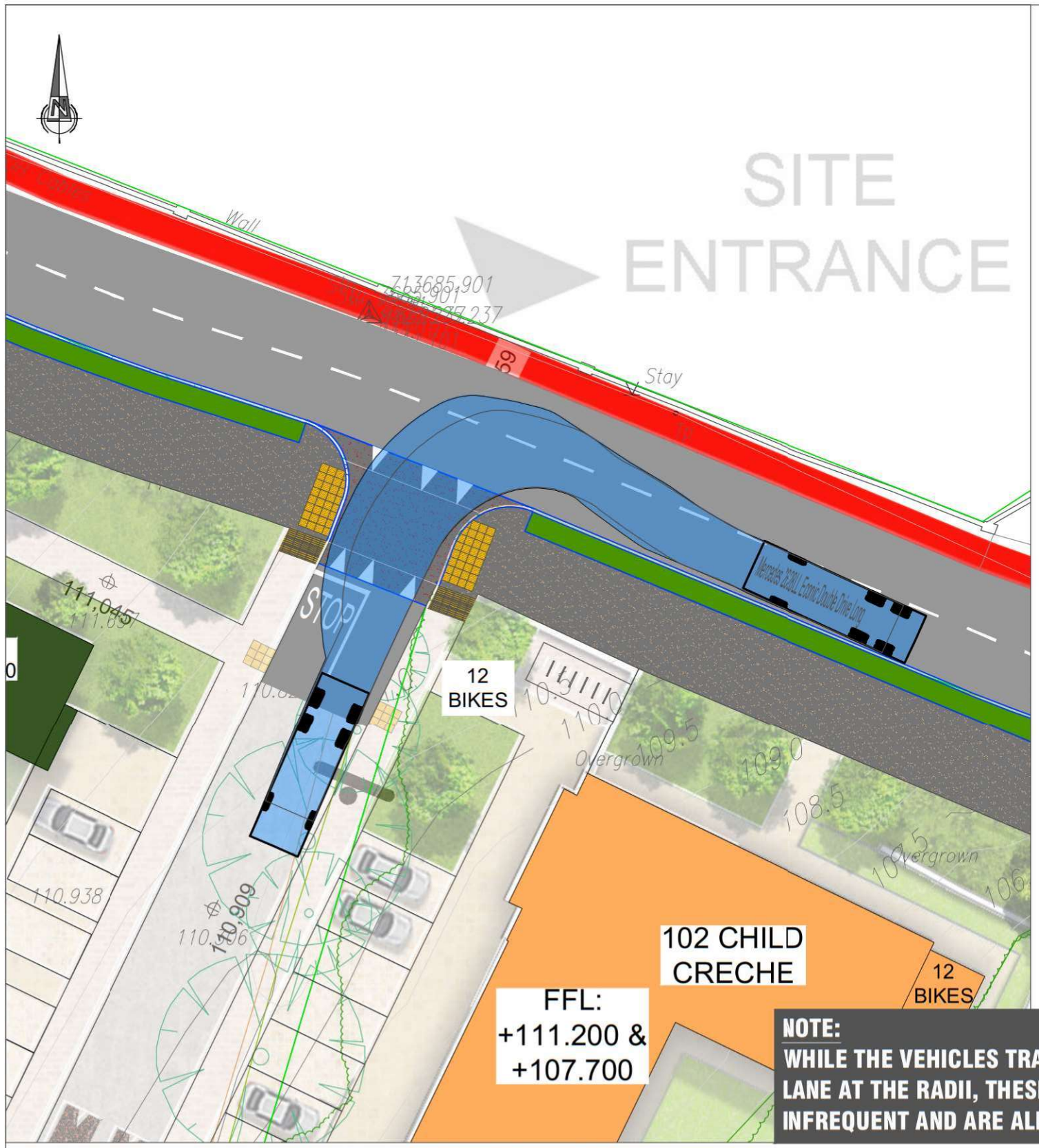

AUTOTRACK OF A REFUSE VEHICLE ENTERING

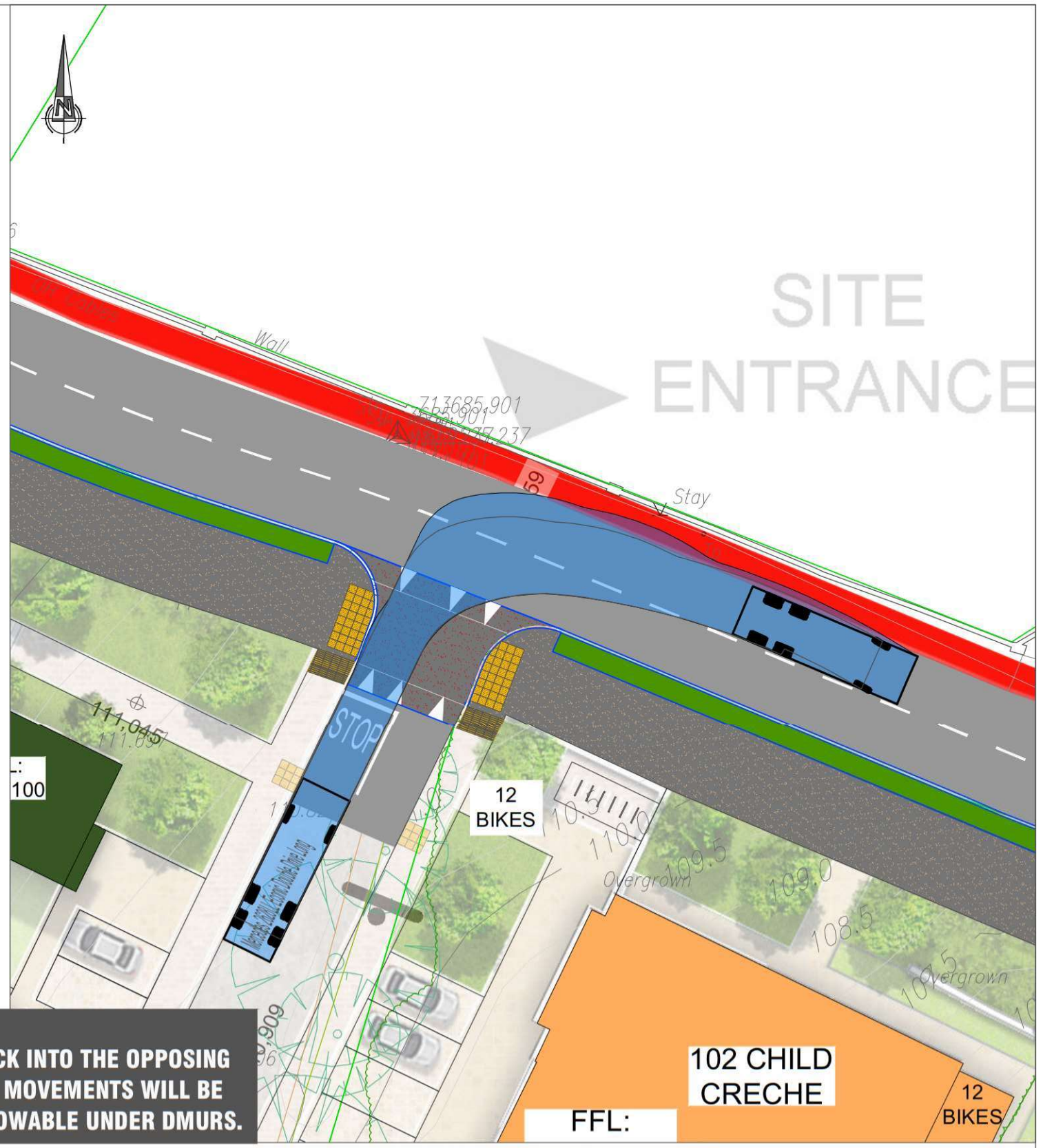

AUTOTRACK OF A REFUSE VEHICLE EXITING

NOTE:
WHILE THE VEHICLES TRACK INTO THE OPPOSING LANE AT THE RADII, THESE MOVEMENTS WILL BE INFREQUENT AND ARE ALLOWABLE UNDER DMURS.

NRB Consulting Engineers Ltd recommend that Road and land ownership boundaries are verified through Legal & Land searches by the Client.
This drawing is based upon 24058_P_004 SITE PLAN 2025.11.06, received 06/11/25. NRB Consulting Engineers Ltd shall not be liable for any inaccuracies or deficiencies.

REV	DATE	AMENDMENTS	DRAWN	CHK	APP

NRB Consulting Engineers Ltd
5th Floor
40 Mespil Road
Dublin 4
D04 C2N4

Phone/Fax: +353 1 292 1941
Email: info@nrb.ie
Web: www.nrb.ie
Registered in Ireland No. 491679

NRB consulting engineers

COPYRIGHT © RESERVED

Client

Project: Gorey LRD, Wexford

Title: Proposed Site Access 02 Refuse Vehicle Tracks

NRB Consulting Engineers Ltd accept no responsibility for any unauthorised amendments to this drawing. Only figured dimensions to be worked to.

Project No.	Drawing No.
25-030	NRB-TA-005

Drawn	Checked	Approved
PB	BMcM 04/12/25	BMcM 04/12/25

Date	Scale @ A3	Rev
4-Dec-25	1:250	A

Purpose of Issue: ☐ Draft ☐ As Built ☐ Information ☐ Tender ☐ Approval ☐ Construction

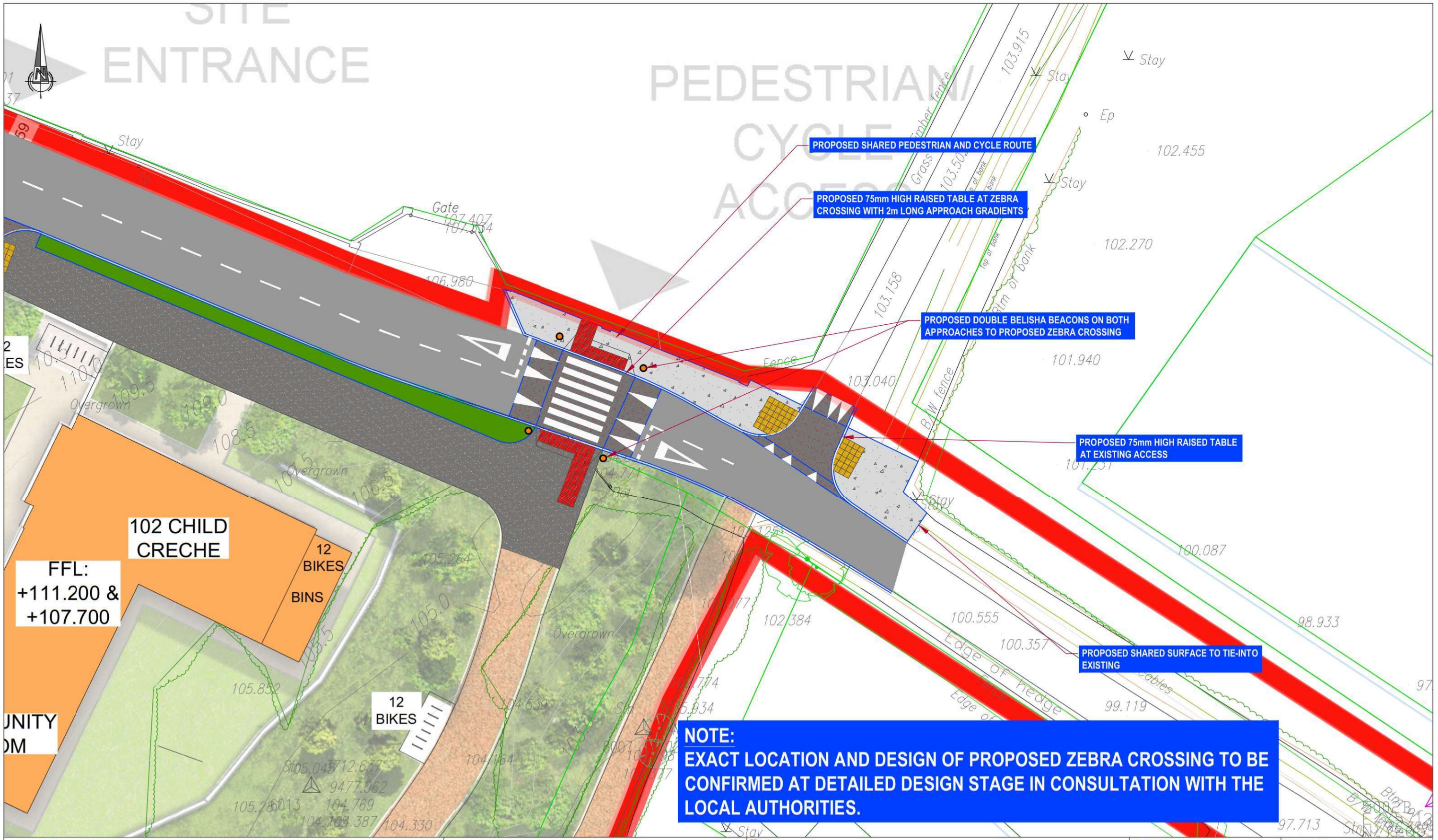

NRB Consulting Engineers Ltd recommend that Road and land ownership boundaries are verified through Legal & Land searches by the Client.
This drawing is based upon 24058_P_004 SITE PLAN 2025.11.06, received 06/11/25. NRB Consulting Engineers Ltd shall not be liable for any inaccuracies or deficiencies.

REV	DATE	AMENDMENTS	DRAWN	CHK	APP

NRB Consulting Engineers Ltd
5th Floor
40 Mespil Road
Dublin 4
D04 C2N4

Phone/Fax: +353 1 292 1941
Email: info@nrb.ie
Web: www.nrb.ie
Registered in Ireland No. 491679

COPYRIGHT © RESERVED

Client		Project No. 25-030	Drawing No. NRB-TA-006
Project	Gorey LRD Wexford	Drawn PB / Checked BMcM 04/12/25 / Approved BMcM 04/12/25	
Title	Proposed Zebra Crossing Layout	Date 4-Dec-25	Scale @ A3 1:250 / Rev A

NRB Consulting Engineers Ltd accept no responsibility for any unauthorised amendments to this drawing. Only figured dimensions to be worked to.

Purpose of Issue: ☐ Draft ☐ Information ☐ Approval ☐ As Built ☐ Tender ☐ Construction

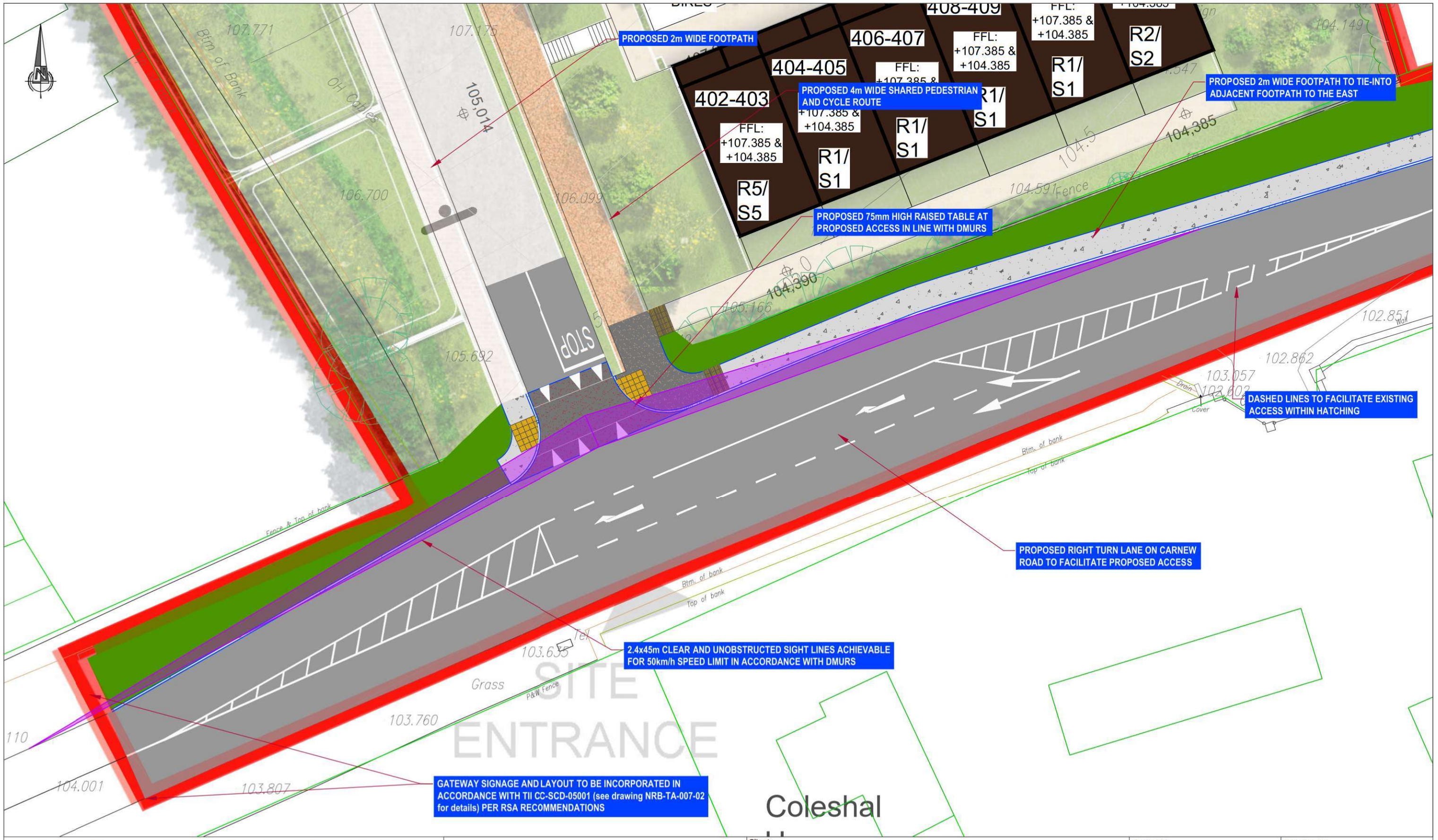

NRB Consulting Engineers Ltd recommend that Road and land ownership boundaries are verified through Legal & Land searches by the Client.
This drawing is based upon 24058_P_004 SITE PLAN 2025.11.06, received 06/11/25. NRB Consulting Engineers Ltd shall not be liable for any inaccuracies or deficiencies.

REV	DATE	AMENDMENTS	DRAWN	CHK	APP

NRB Consulting Engineers Ltd
5th Floor
40 Mespil Road
Dublin 4
D04 C2N4

Phone/Fax: +353 1 292 1941
Email: info@nrb.ie
Web: www.nrb.ie
Registered in Ireland No. 491679

COPYRIGHT © RESERVED

Client		Project No. 25-030	Drawing No. NRB-TA-007-01
Project	Gorey LRD Wexford	Drawn PB / Checked BMcM 04/12/25	Approved BMcM 04/12/25
Title	Proposed Site Access 03 Layout	Date 4-Dec-25	Scale @ A3 1:250 / Rev A

NRB Consulting Engineers Ltd accept no responsibility for any unauthorised amendments to this drawing. Only figured dimensions to be worked to.

Purpose of Issue: ☐ Draft ☐ Information ☐ Approval ☐ As Built ☐ Tender ☐ Construction



SECTION A-A

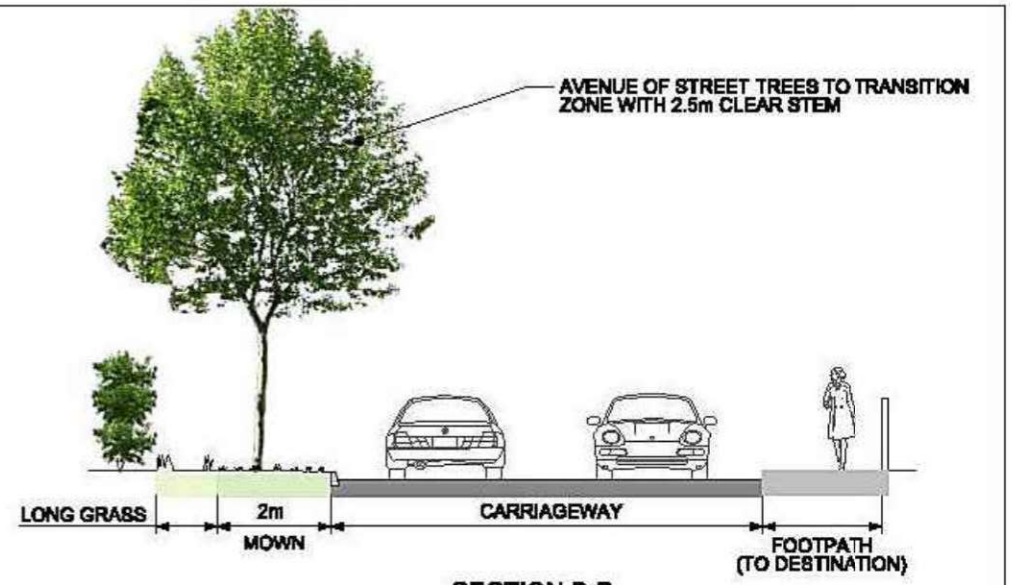

SECTION B-B

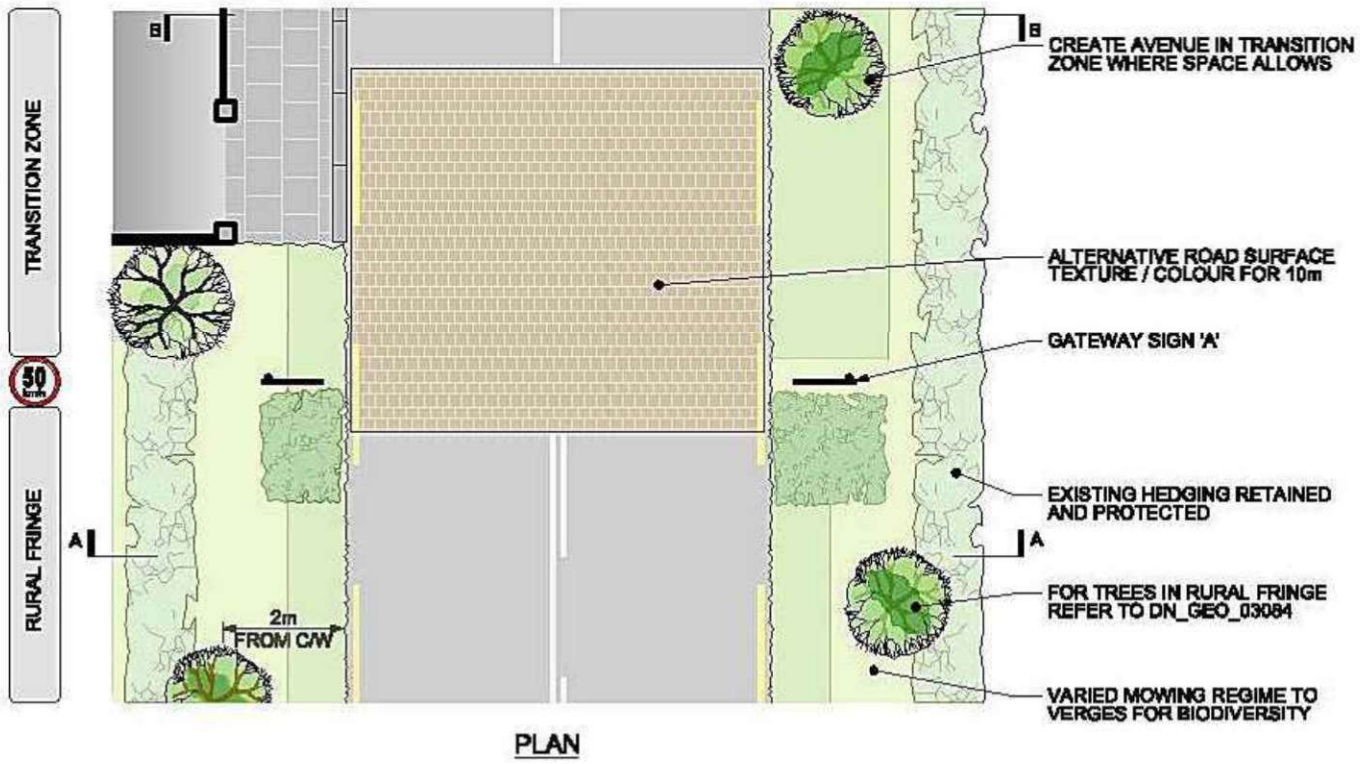

PLAN

NOTES:

1. ALL FIXTURES AT GATEWAY SHOULD CONFORM TO EN 12767.
2. ALL LIGHTING SHALL BE IN ACCORDANCE WITH THE TII LIGHTING STANDARD DN-LHT-03038.
3. SEE CC-SCD-05119 TO CC-SCD-05120 FOR DETAILS OF SIGNS FOR GATEWAY TYPE A.
4. THIS DESIGN PROVES GENERALLY SUITABLE FOR ROADS WITHOUT A HARDSHOULDER.
5. ADVANCED WARNING SIGNAGE IS GENERALLY NOT REQUIRED FOR GATEWAY TYPE A DESIGNS, AS THERE ARE GENERALLY NO HARD-SHOULDERS PRESENT ON THE IMMEDIATE APPROACH.
6. WHEN SPECIFYING TREES ENSURE CLEAR STEM *HEIGHT OF 2.5m SO THEY DO NOT IMPACT ON* PEDESTRIAN OR CYCLIST HEAD ROOM.

LEGEND:

- CARRIAGEWAY
- FOOTPATH
- BUILDINGS / PRIVATE LAND
- KERBLINE
- LOW LEVEL PLANTING
- VARIED MOWING REGIME TO VERGES FOR BIODIVERSITY
- EXISTING HEDGING
- EXISTING / RETAINED TREE
- PROPOSED TREE

Bonneagar Iompair Éireann
Transport Infrastructure Ireland

ACTIVITY: CC Construction & Commissioning

STREAM: STANDARD CONSTRUCTION DETAILS (SCD)

PUBLICATION TITLE: **GATEWAY: TYPE A DESIGN - OVERALL DIMENSION 10.4m MINIMUM**

HISTORICAL REFERENCE	DOCUMENTATION SET	PUBLICATION DATE	PUBLICATION NUMBER
N/A	STANDARDS	JULY 2021	CC SCD 05101

REV	DATE	AMENDMENTS	DRAWN	CHK	APP

NRB Consulting Engineers Ltd
5th Floor
40 Mespil Road
Dublin 4
D04 C2N4

Phone/Fax: +353 1 292 1941
Email: info@nrb.ie
Web: www.nrb.ie
Registered in Ireland No. 491679

COPYRIGHT © RESERVED

Client:

Project: Gorey LRD
Wexford

Title: Potential Gateway Treatment at Carnew Access

NRB Consulting Engineers Ltd accept no responsibility for any unauthorised amendments to this drawing. Only figured dimensions to be worked to.

Project No.	Drawing No.
25-030	NRB-TA-007-02

Drawn	Checked	Approved
PB	BMcM 04/12/25	BMcM 04/12/25

Date	Scale @ A3	Rev
4-Dec-25	n.t.s.	A

Purpose of Issue: ☐ Draft ☐ Information ☐ Approval ☐ As Built ☐ Tender ☐ Construction

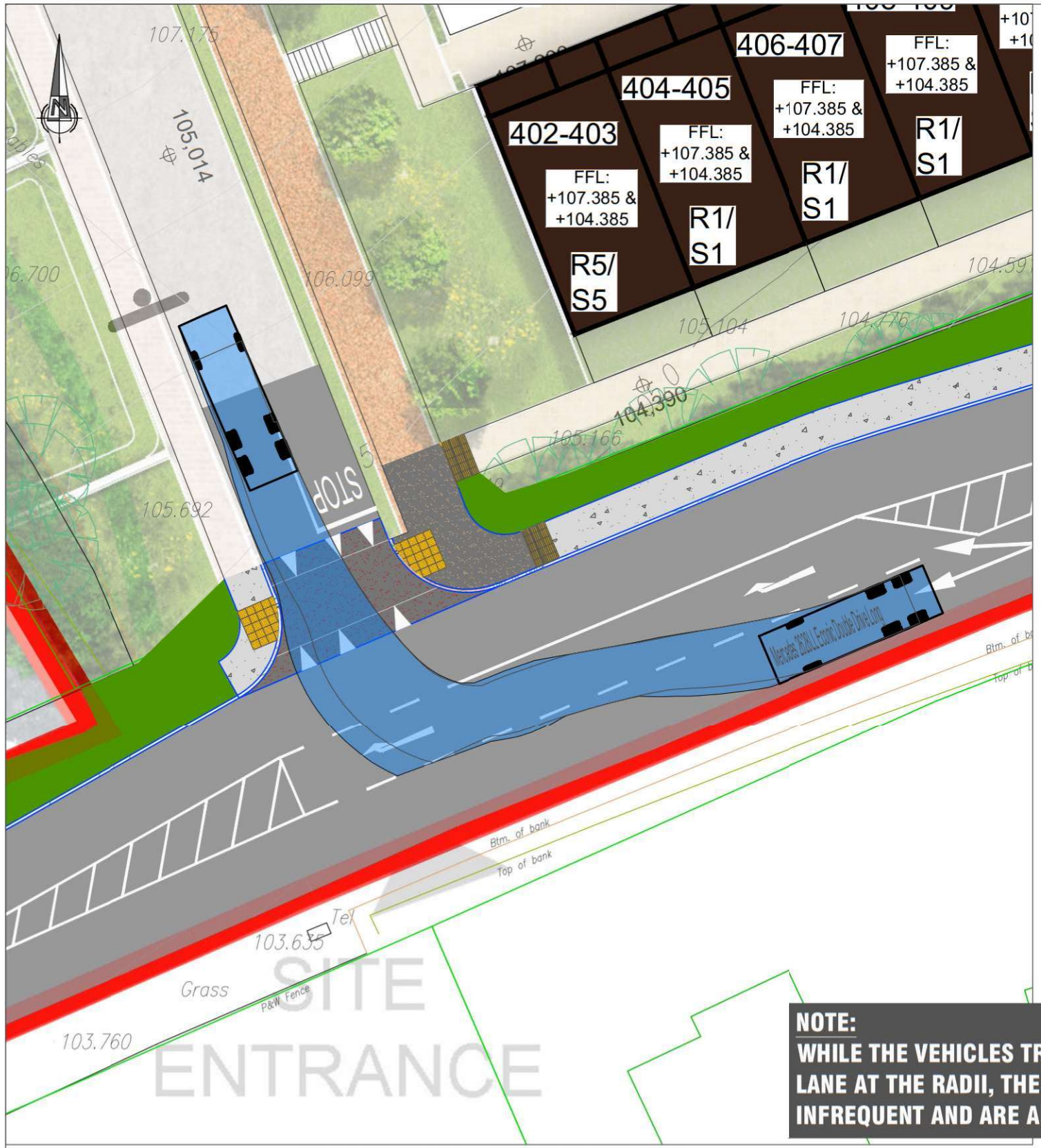

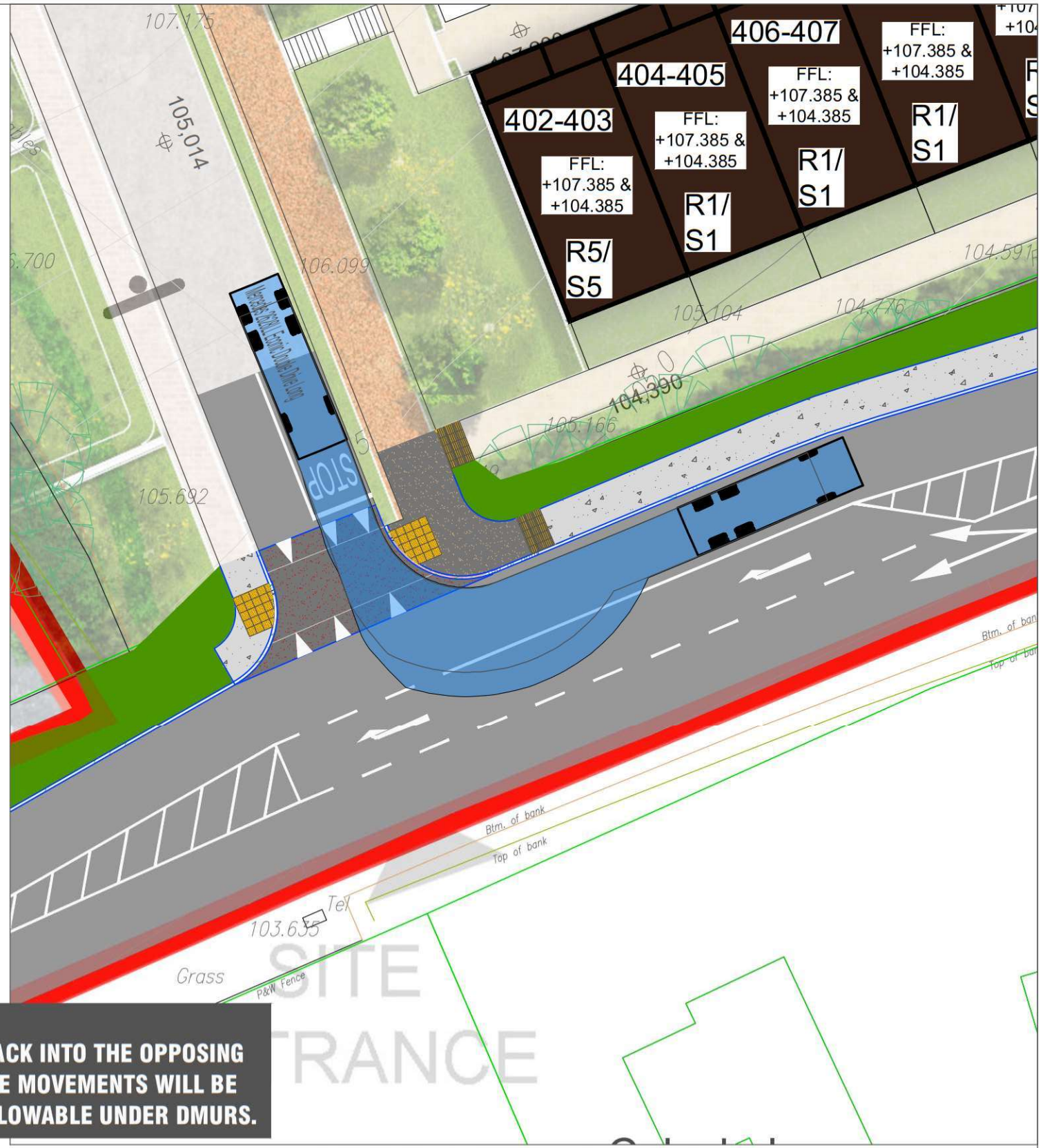

NOTE:
WHILE THE VEHICLES TRACK INTO THE OPPOSING LANE AT THE RADII, THESE MOVEMENTS WILL BE INFREQUENT AND ARE ALLOWABLE UNDER DMURS.

AUTOTRACK OF A REFUSE VEHICLE ENTERING

AUTOTRACK OF A REFUSE VEHICLE EXITING

NRB Consulting Engineers Ltd recommend that Road and land ownership boundaries are verified through Legal & Land searches by the Client.
This drawing is based upon 24058_P_004 SITE PLAN 2025.11.06, received 06/11/25. NRB Consulting Engineers Ltd shall not be liable for any inaccuracies or deficiencies.

REV	DATE	AMENDMENTS	DRAWN	CHK	APP

NRB Consulting Engineers Ltd
5th Floor
40 Mespil Road
Dublin 4
D04 C2N4

Phone/Fax: +353 1 292 1941
Email: info@nrb.ie
Web: www.nrb.ie
Registered in Ireland No. 491679

NRB consulting engineers

COPYRIGHT © RESERVED

Client		Project No. 25-030	Drawing No. NRB-TA-008
Project	Gorey LRD Wexford	Drawn PB / Checked BMcM 04/12/25	Approved BMcM 04/12/25
Title	Proposed Site Access 03 Refuse Vehicle Tracks	Date 18-Nov-25	Scale @ A3 1:250 / Rev A

NRB Consulting Engineers Ltd accept no responsibility for any unauthorised amendments to this drawing. Only figured dimensions to be worked to.

Purpose of Issue: ☐ Draft ☐ Information ☐ Approval ☐ As Built ☐ Tender ☐ Construction

DO NOT SCALE. WORK TO FIGURED DIMENSIONS ONLY.
ALL EXISTING DIMENSIONS TO BE CHECKED ON SITE.
DRAWN ON AUTOCAD R2004 AT DEADY GAHAN ARCHITECTS LTD
LAYERS ON THIS DRAWING COMPLY WITH BS 1192: PART 5

RESIDENTIAL SITE - GOREY LRD

Unit Type	Description	No. of Bedroom	No. of Bed Space	Unit Area (sq.m.)	No. of Units	%
B1	semi-detached	4 bed	7	151.60	16	3.9%
F5/F7	shallow semi-detached / detached	4 bed	7	156.20	15	3.6%
F4	townhouse corner	4 bed	7	154.00	8	1.9%
F2	shallow semi-detached	3 bed	5	104.10	6	1.5%
F3	shallow semi-detached	3 bed	5	109.70	16	3.9%
F1	townhouse corner	3 bed	5	102.60	6	1.5%
D1/D1C	townhouse end	3 bed	4	92.00	148	35.9%
E1	townhouse mid	2 bed	4	80.00	134	32.4%
R1/R2/R3/R4/R5	GF/FF duplex apartments (accessible)	3 bed	5	107.20	28	6.8%
S1/S2/S3/S4/S5	SF apartments (accessible)	1 bed	2	51.70	28	6.8%
P1	maisonette (accessible)	1 bed	2	56.6	4	0.9%
P2	maisonette (accessible)	1 bed	2	56.5	4	0.9%
Total No. of Units					413	100.0%

PLUS 1no 102 CHILD CRÈCHE (509.9 SQ.M) & 1no COMMUNITY ROOM (59.2 SQ.M)

SITE SCHEDULE

Site Area (red line boundary)	19.4 HA	
Developable Area	11.5 HA	
Total No. of Units	No. 413	
Density	35.9 units/HA	
Open Space	15.0%	
Standard Houses	349	84.6%
Apt/Duplex/Maisonette Units	64	15.4%
4 bed	39	9.4%
3 bed	204	49.6%
2 bed	134	32.4%
1 bed	36	8.6%

4m Pedestrian/ cycle route along the public road
Existing vegetation/ hedgerow to be retained where possible
SITE ENTRANCE
4m Pedestrian/ cycle route along the public road
SITE BOUNDARY OUTLINED IN RED
SITE ENTRANCE
SITE NOTICE LOCATION
Split level 102no child creche & community room
PEDESTRIAN/ CYCLE ACCESS
Proposed raised crossing
PARKLAND AREA
OPEN SPACE
Existing stone structures to be retained where possible and incorporated into the landscape proposal
Existing laneway to be retained and utilised as a dedicated pedestrian/cycle route
2-3 storey split level apartments
(1 bed over 3 bed duplex)
OPEN SPACE
OPEN SPACE
OPEN SPACE
OPEN SPACE
Dedicated pedestrian/cycle route
2-3 storey split level apartments
(1 bed apt over 3 bed duplex)
Dedicated pedestrian/cycle route
2-3 storey split level apartments
(1 bed apt over 3 bed duplex)
SITE ENTRANCE
SITE NOTICE LOCATION

N
W E
S

PROPOSED SITE PLAN
1:1000 @ A1

date	rev	name	chk	note
14.11.25	P1	PC	EJG	ISSUE FOR PLANNING

DEADY GAHAN ARCHITECTS
EASTGATE VILLAGE, LITTLE ISLAND, CORK
T: 021 4355016 W: WWW.DGARCHITECTS.IE
EMAIL: INFO@DGARCHITECTS.IE

Project
PROPOSED RESIDENTIAL DEVELOPMENT
IN KILNAHUE, GOREY,
CO. WEXFORD

Drawing title
PROPOSED SITE PLAN - MAIN AREA

Scale	Drawn	Checked	Date
1:1000 @ A1	LM	EJG	26.06.25

Project No.	Drg. No.	Revision
24058	24058/P/005	P1

☐ Information \ Comments — Tender ☐
☐ Planning — Construction ☐

APPENDIX B

Traffic Survey Output Data

Site/Movement Labelling

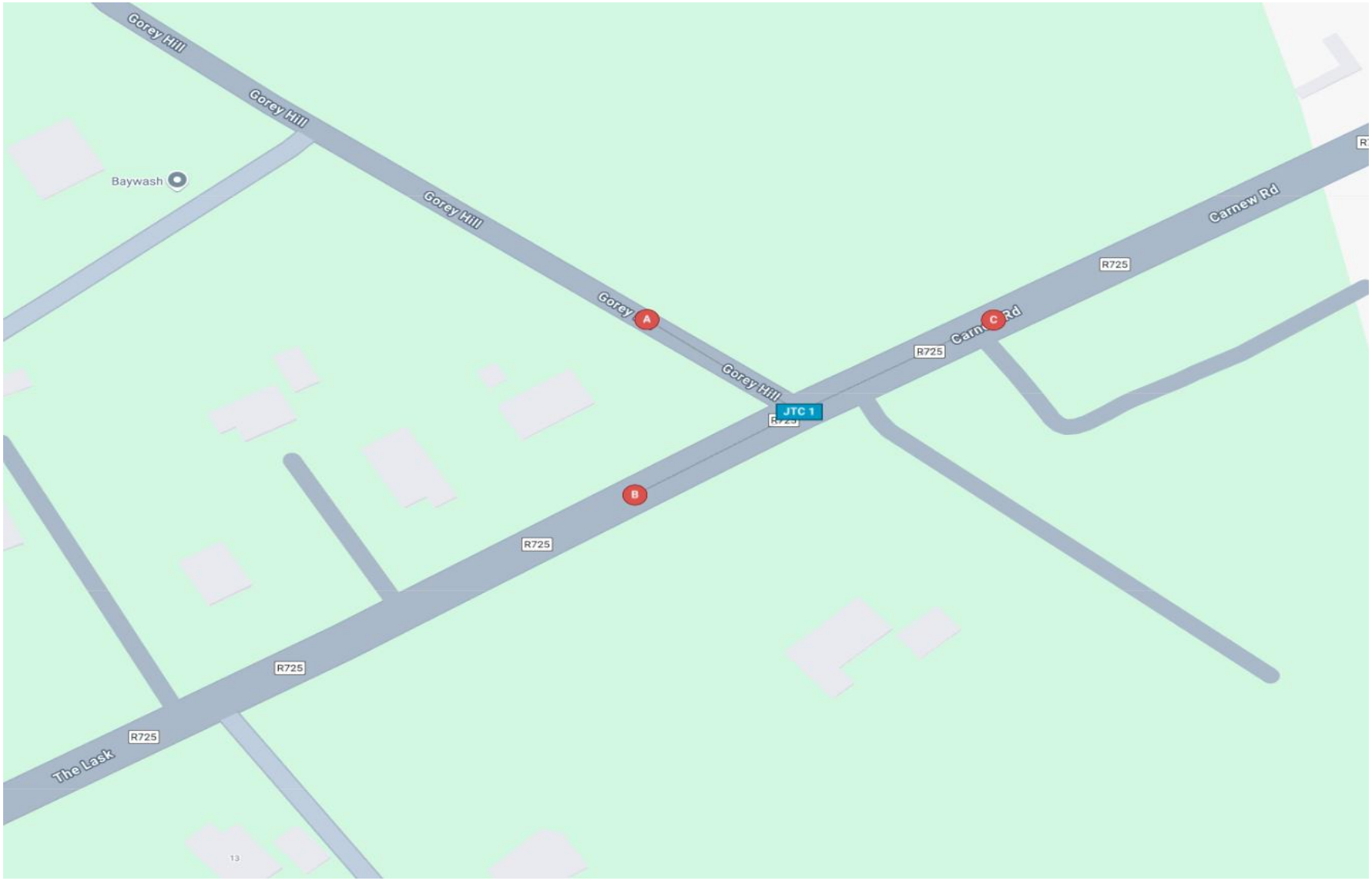

Job number: IDA/25/187	Job Dates: 26/02/2025	Drawing No: IDA/25/187-01	IDASO Innovative Data Solutions
Client: NRB	Job Days: Wednesday	Author: MK	

Site/Movement Labelling

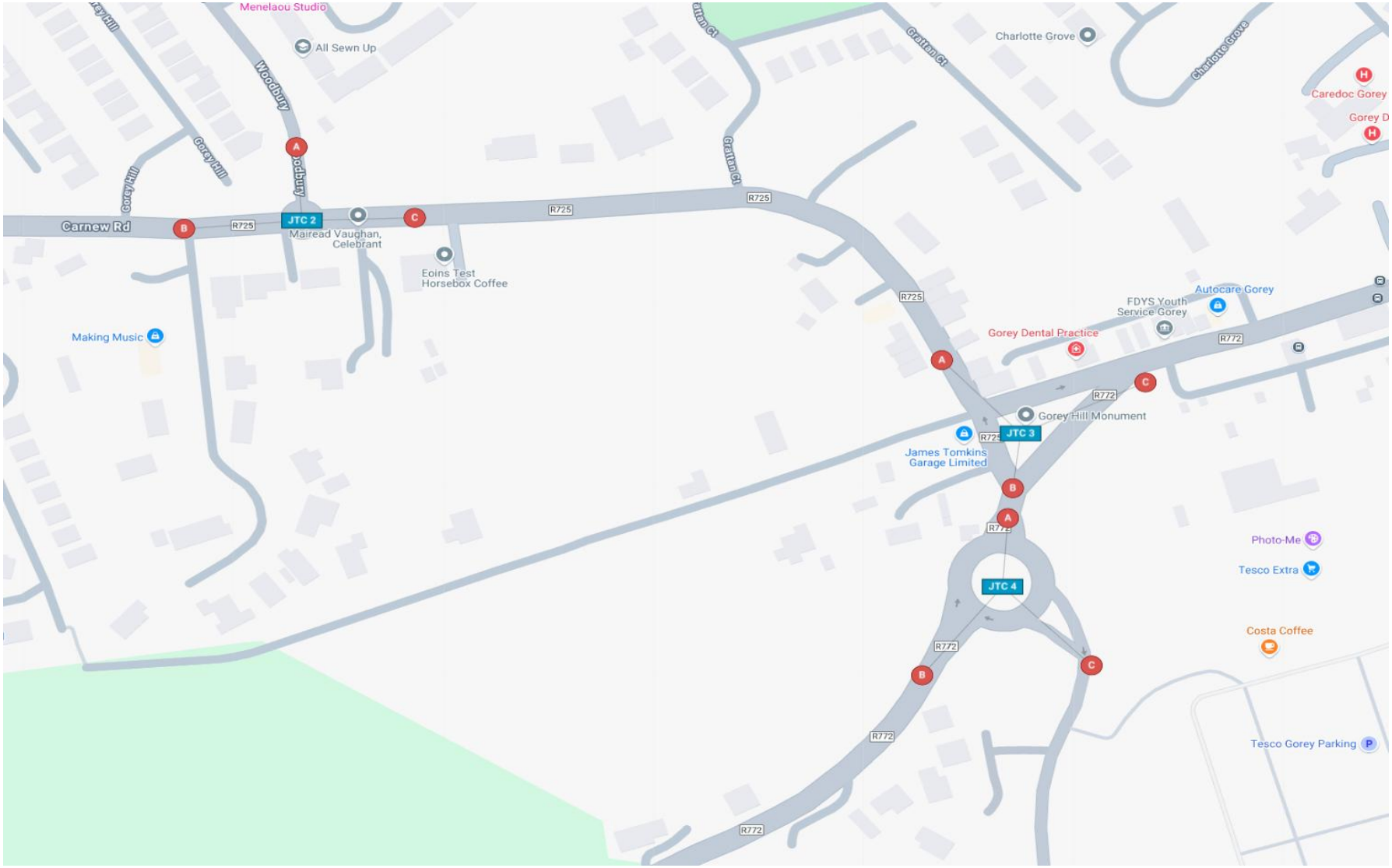

Job number: IDA/25/187	Job Dates: 26/02/2025	Drawing No: IDA/25/187-02	IDASO Innovative Data Solutions
Client: NRB	Job Days: Wednesday	Author: MK	

IDASO

25187 - Gorey **FEBRUARY 2025**

MANUAL CLASSIFIED JUNCTION TURNING COUNTS **IDA/25/187**

SITE: Site 1 DATE: 26th February 2025

LOCATION: Gorey Hill/R725/Carnew Rd DAY: Wednesday

	MOVEMENT 1 (A => C)								MOVEMENT 2 (A => B)								MOVEMENT 3 (B => A)							
TIME	**PCL**	**MCL**	**CAR**	**LGV**	**HGV**	**BUS**	**TOT**	**PCU**	**PCL**	**MCL**	**CAR**	**LGV**	**HGV**	**BUS**	**TOT**	**PCU**	**PCL**	**MCL**	**CAR**	**LGV**	**HGV**	**BUS**	**TOT**	**PCU**
07:30	0	0	1	1	0	0	2	2	0	0	0	0	0	0	0	0	0	0	0	0	0	0	0	0
07:45	0	0	1	0	0	0	1	1	0	0	0	0	0	0	0	0	0	0	2	0	0	0	2	2
H/TOT	0	0	2	1	0	0	3	3	0	0	0	0	0	0	0	0	0	0	2	0	0	0	2	2
08:00	0	0	8	0	0	0	8	8	0	0	1	0	0	0	1	1	0	0	3	0	0	0	3	3
08:15	0	0	18	1	1	0	20	21	0	0	4	0	0	0	4	4	0	0	13	0	1	0	14	15
08:30	0	0	46	1	0	4	51	55	0	0	9	0	0	1	10	11	0	0	17	1	0	0	18	18
08:45	0	0	59	3	0	0	62	62	0	0	9	0	0	0	9	9	0	0	10	0	0	0	10	10
H/TOT	0	0	131	5	1	4	141	146	0	0	23	0	0	1	24	25	0	0	43	1	1	0	45	46
09:00	0	0	47	1	0	0	48	48	0	0	4	0	0	0	4	4	0	0	9	1	0	0	10	10
09:15	0	0	28	2	0	1	31	32	0	0	4	0	0	0	4	4	0	0	4	1	0	0	5	5
09:30	0	0	13	0	0	0	13	13	0	0	1	0	0	0	1	1	0	0	2	0	0	0	2	2
09:45	0	0	5	0	0	0	5	5	0	0	0	0	0	0	0	0	0	0	1	0	0	0	1	1
H/TOT	0	0	93	3	0	1	97	98	0	0	9	0	0	0	9	9	0	0	16	2	0	0	18	18
P/TOT	0	0	226	9	1	5	241	247	0	0	32	0	0	1	33	34	0	0	61	3	1	0	65	66

	MOVEMENT 1 (A => C)								MOVEMENT 2 (A => B)								MOVEMENT 3 (B => A)							
TIME	**PCL**	**MCL**	**CAR**	**LGV**	**HGV**	**BUS**	**TOT**	**PCU**	**PCL**	**MCL**	**CAR**	**LGV**	**HGV**	**BUS**	**TOT**	**PCU**	**PCL**	**MCL**	**CAR**	**LGV**	**HGV**	**BUS**	**TOT**	**PCU**
16:00	0	0	21	1	0	3	25	28	0	0	5	0	0	0	5	5	0	0	2	0	0	0	2	2
16:15	0	0	3	0	0	0	3	3	0	0	0	0	0	0	0	0	0	0	0	0	0	0	0	0
16:30	0	0	9	0	0	0	9	9	0	0	0	0	0	0	0	0	0	0	4	1	0	0	5	5
16:45	0	0	3	1	0	0	4	4	0	0	0	0	0	0	0	0	0	0	5	0	0	0	5	5
H/TOT	0	0	36	2	0	3	41	44	0	0	5	0	0	0	5	5	0	0	11	1	0	0	12	12
17:00	0	0	27	0	0	0	27	27	0	0	2	0	0	0	2	2	0	0	0	0	0	0	0	0
17:15	0	0	2	0	0	0	2	2	0	0	0	0	0	0	0	0	0	0	0	0	0	0	0	0
17:30	0	0	0	0	0	0	0	0	0	0	2	0	0	0	2	2	0	0	0	1	0	0	1	1
17:45	0	0	4	0	0	0	4	4	0	0	1	0	0	0	1	1	0	0	0	0	0	0	0	0
H/TOT	0	0	33	0	0	0	33	33	0	0	5	0	0	0	5	5	0	0	0	1	0	0	1	1
18:00	0	0	3	1	0	0	4	4	0	0	2	0	0	0	2	2	0	0	2	0	0	0	2	2
18:15	0	0	8	0	0	0	8	8	0	0	2	0	0	0	2	2	0	0	1	0	0	0	1	1
H/TOT	0	0	11	1	0	0	12	12	0	0	4	0	0	0	4	4	0	0	3	0	0	0	3	3
P/TOT	0	0	80	3	0	3	86	89	0	0	14	0	0	0	14	14	0	0	14	2	0	0	16	16

IDASO

25187 - Gorey **FEBRUARY 2025**

MANUAL CLASSIFIED JUNCTION TURNING COUNTS **IDA/25/187**

SITE: Site 1 DATE: 26th February 2025

LOCATION: Gorey Hill/R725/Carnew Rd DAY: Wednesday

	MOVEMENT 4 (B => C)								MOVEMENT 5 (C => B)								MOVEMENT 6 (C => A)								PCU's Through Junction
TIME	PCL	MCL	CAR	LGV	HGV	BUS	TOT	PCU	PCL	MCL	CAR	LGV	HGV	BUS	TOT	PCU	PCL	MCL	CAR	LGV	HGV	BUS	TOT	PCU	
07:30	0	0	30	15	1	3	49	53	0	0	27	7	2	0	36	38	0	0	0	0	0	0	0	0	93
07:45	0	0	58	16	3	0	77	80	0	0	34	8	1	0	43	44	0	0	4	0	0	0	4	4	131
H/TOT	0	0	88	31	4	3	126	133	0	0	61	15	3	0	79	82	0	0	4	0	0	0	4	4	224
08:00	0	0	81	4	4	1	90	95	0	0	37	10	6	1	54	61	0	0	20	1	0	0	21	21	189
08:15	0	0	98	9	4	0	111	115	0	0	28	4	3	3	38	44	0	0	43	1	0	1	45	46	245
08:30	0	0	65	9	1	0	75	76	0	0	43	7	4	0	54	58	0	0	75	2	0	4	81	85	303
08:45	0	0	58	5	3	0	66	69	0	0	46	6	3	0	55	58	0	0	61	0	0	0	61	61	269
H/TOT	0	0	302	27	12	1	342	355	0	0	154	27	16	4	201	221	0	0	199	4	0	5	208	213	1006
09:00	0	0	74	10	3	0	87	90	0	0	32	7	3	0	42	45	0	0	40	0	0	1	41	42	239
09:15	0	0	54	5	1	0	60	61	0	0	35	6	4	0	45	49	0	0	19	0	0	0	19	19	170
09:30	0	0	55	6	4	0	65	69	0	0	11	5	5	1	22	28	0	0	2	0	0	0	2	2	115
09:45	0	0	49	10	3	1	63	67	0	0	33	4	4	1	42	47	0	0	3	0	0	0	3	3	123
H/TOT	0	0	232	31	11	1	275	287	0	0	111	22	16	2	151	169	0	0	64	0	0	1	65	66	647
P/TOT	0	0	622	89	27	5	743	775	0	0	326	64	35	6	431	472	0	0	267	4	0	6	277	283	1877

	MOVEMENT 4 (B => C)								MOVEMENT 5 (C => B)								MOVEMENT 6 (C => A)								PCU's Through Junction
TIME	PCL	MCL	CAR	LGV	HGV	BUS	TOT	PCU	PCL	MCL	CAR	LGV	HGV	BUS	TOT	PCU	PCL	MCL	CAR	LGV	HGV	BUS	TOT	PCU	
16:00	0	0	40	8	3	1	52	56	0	0	84	8	0	1	93	94	0	0	10	1	0	0	11	11	196
16:15	0	0	42	4	1	0	47	48	0	0	70	14	2	3	89	94	0	0	5	0	0	0	5	5	150
16:30	0	0	43	4	1	0	48	49	0	0	72	16	3	4	95	102	0	0	7	0	0	0	7	7	172
16:45	0	0	61	7	0	2	70	72	0	0	84	9	3	1	97	101	0	0	8	1	0	0	9	9	191
H/TOT	0	0	186	23	5	3	217	225	0	0	310	47	8	9	374	391	0	0	30	2	0	0	32	32	709
17:00	0	0	45	5	1	0	51	52	0	0	74	15	1	4	94	99	0	0	4	1	0	0	5	5	185
17:15	1	0	58	6	1	0	66	66	0	0	57	12	3	2	74	79	0	0	3	0	0	0	3	3	150
17:30	0	0	45	7	1	0	53	54	0	0	82	11	3	0	96	99	0	0	1	0	0	0	1	1	157
17:45	0	0	45	2	2	2	51	55	0	0	64	9	3	0	76	79	0	0	4	1	0	0	5	5	144
H/TOT	1	0	193	20	5	2	221	227	0	0	277	47	10	6	340	356	0	0	12	2	0	0	14	14	636
18:00	0	0	42	6	1	0	49	50	0	0	76	10	3	1	90	94	0	0	3	2	0	0	5	5	157
18:15	0	1	40	3	0	0	44	43	0	0	57	4	1	0	62	63	0	0	6	0	0	0	6	6	123
H/TOT	0	1	82	9	1	0	93	93	0	0	133	14	4	1	152	157	0	0	9	2	0	0	11	11	280
P/TOT	1	1	461	52	11	5	531	545	0	0	720	108	22	16	866	904	0	0	51	6	0	0	57	57	1625

IDASO

25187 - Gorey **FEBRUARY 2025**

MANUAL CLASSIFIED JUNCTION TURNING COUNTS **IDA/25/187**

SITE: Site 2 DATE: 26th February 2025

LOCATION: Woodbury/Carnew Rd DAY: Wednesday

	MOVEMENT 1 (A => C)								MOVEMENT 2 (A => B)								MOVEMENT 3 (B => A)							
TIME	**PCL**	**MCL**	**CAR**	**LGV**	**HGV**	**BUS**	**TOT**	**PCU**	**PCL**	**MCL**	**CAR**	**LGV**	**HGV**	**BUS**	**TOT**	**PCU**	**PCL**	**MCL**	**CAR**	**LGV**	**HGV**	**BUS**	**TOT**	**PCU**
07:30	0	0	15	2	0	0	17	17	0	0	7	1	0	0	8	8	0	0	8	5	0	0	13	13
07:45	0	0	26	1	0	0	27	27	0	0	10	0	0	0	10	10	0	0	19	4	1	0	24	25
H/TOT	0	0	41	3	0	0	44	44	0	0	17	1	0	0	18	18	0	0	27	9	1	0	37	38
08:00	0	0	31	2	0	4	37	41	0	0	18	2	0	1	21	22	0	0	32	0	0	0	32	32
08:15	0	0	60	2	0	1	63	64	0	0	25	1	0	2	28	30	0	0	46	3	2	0	51	53
08:30	0	0	70	7	1	0	78	79	0	0	63	5	0	0	68	68	0	0	54	4	0	0	58	58
08:45	0	0	57	1	0	1	59	60	0	0	55	4	1	0	60	61	0	0	49	5	1	0	55	56
H/TOT	0	0	218	12	1	6	237	244	0	0	161	12	1	3	177	181	0	0	181	12	3	0	196	199
09:00	0	0	24	1	0	0	25	25	0	0	25	4	0	0	29	29	0	0	32	4	0	0	36	36
09:15	1	0	20	4	1	0	26	26	0	0	21	1	0	0	22	22	0	0	31	0	0	0	31	31
09:30	0	0	15	4	1	0	20	21	0	0	5	1	0	0	6	6	0	0	16	1	0	0	17	17
09:45	0	0	25	3	4	0	32	36	0	0	7	2	0	0	9	9	0	0	22	4	0	0	26	26
H/TOT	1	0	84	12	6	0	103	108	0	0	58	8	0	0	66	66	0	0	101	9	0	0	110	110
P/TOT	1	0	343	27	7	6	384	396	0	0	236	21	1	3	261	265	0	0	309	30	4	0	343	347

	MOVEMENT 1 (A => C)								MOVEMENT 2 (A => B)								MOVEMENT 3 (B => A)							
TIME	**PCL**	**MCL**	**CAR**	**LGV**	**HGV**	**BUS**	**TOT**	**PCU**	**PCL**	**MCL**	**CAR**	**LGV**	**HGV**	**BUS**	**TOT**	**PCU**	**PCL**	**MCL**	**CAR**	**LGV**	**HGV**	**BUS**	**TOT**	**PCU**
16:00	0	0	43	5	2	0	50	52	0	0	37	3	0	0	40	40	0	0	23	5	0	0	28	28
16:15	1	0	34	4	0	0	39	38	0	0	25	6	0	0	31	31	0	0	24	1	0	0	25	25
16:30	1	0	33	14	0	0	48	47	0	0	26	12	1	0	39	40	0	0	17	2	0	0	19	19
16:45	0	0	45	9	1	0	55	56	0	0	26	3	1	0	30	31	0	0	16	1	0	0	17	17
H/TOT	2	0	155	32	3	0	192	193	0	0	114	24	2	0	140	142	0	0	80	9	0	0	89	89
17:00	0	1	28	3	0	1	33	33	0	0	28	6	0	1	35	36	0	0	33	3	0	0	36	36
17:15	0	0	40	5	0	0	45	45	0	0	19	7	1	0	27	28	0	0	17	0	0	0	17	17
17:30	0	0	20	1	0	0	21	21	0	0	27	5	0	0	32	32	0	0	15	1	0	0	16	16
17:45	1	0	54	3	0	0	58	57	1	0	20	3	0	0	24	23	1	0	21	0	0	1	23	23
H/TOT	1	1	142	12	0	1	157	156	1	0	94	21	1	1	118	119	1	0	86	4	0	1	92	92
18:00	0	0	51	2	2	0	55	57	0	0	29	0	0	0	29	29	0	0	15	1	0	0	16	16
18:15	0	0	26	3	0	0	29	29	0	0	12	1	0	0	13	13	0	0	11	0	0	0	11	11
H/TOT	0	0	77	5	2	0	84	86	0	0	41	1	0	0	42	42	0	0	26	1	0	0	27	27
P/TOT	3	1	374	49	5	1	433	435	1	0	249	46	3	1	300	303	1	0	192	14	0	1	208	208

IDASO

25187 - Gorey **FEBRUARY 2025**

MANUAL CLASSIFIED JUNCTION TURNING COUNTS **IDA/25/187**

SITE: Site 2 DATE: 26th February 2025

LOCATION: Woodbury/Carnew Rd DAY: Wednesday

	MOVEMENT 4 (B => C)								MOVEMENT 5 (C => B)								MOVEMENT 6 (C => A)								PCU's Through Junction
TIME	PCL	MCL	CAR	LGV	HGV	BUS	TOT	PCU	PCL	MCL	CAR	LGV	HGV	BUS	TOT	PCU	PCL	MCL	CAR	LGV	HGV	BUS	TOT	PCU	
07:30	0	0	34	9	0	3	46	49	0	0	24	5	2	0	31	33	0	0	10	3	0	0	13	13	133
07:45	0	0	57	13	3	0	73	76	0	0	28	13	2	0	43	45	0	0	27	4	0	0	31	31	214
H/TOT	0	0	91	22	3	3	119	125	0	0	52	18	4	0	74	78	0	0	37	7	0	0	44	44	347
08:00	0	0	72	5	4	1	82	87	0	0	42	8	5	0	55	60	0	0	47	4	1	8	60	69	311
08:15	0	0	80	9	3	0	92	95	0	0	57	5	5	4	71	80	0	0	81	2	2	1	86	89	411
08:30	0	0	81	5	1	1	88	90	0	0	61	7	3	2	73	78	0	0	73	5	0	1	79	80	453
08:45	0	0	88	3	2	3	96	101	0	0	60	6	2	0	68	70	0	0	35	3	0	0	38	38	386
H/TOT	0	0	321	22	10	5	358	373	0	0	220	26	15	6	267	288	0	0	236	14	3	10	263	276	1561
09:00	0	0	103	8	3	0	114	117	0	0	51	5	2	1	59	62	0	0	27	4	3	0	34	37	306
09:15	0	0	63	8	1	1	73	75	0	0	36	6	4	0	46	50	0	0	19	2	4	0	25	29	233
09:30	0	0	60	5	4	0	69	73	0	0	20	3	5	1	29	35	0	0	14	3	3	0	20	23	175
09:45	0	0	40	6	3	1	50	54	0	0	36	4	4	1	45	50	0	0	12	3	0	0	15	15	190
H/TOT	0	0	266	27	11	2	306	319	0	0	143	18	15	3	179	197	0	0	72	12	10	0	94	104	904
P/TOT	0	0	678	71	24	10	783	817	0	0	415	62	34	9	520	563	0	0	345	33	13	10	401	424	2812

	MOVEMENT 4 (B => C)								MOVEMENT 5 (C => B)								MOVEMENT 6 (C => A)								PCU's Through Junction
TIME	PCL	MCL	CAR	LGV	HGV	BUS	TOT	PCU	PCL	MCL	CAR	LGV	HGV	BUS	TOT	PCU	PCL	MCL	CAR	LGV	HGV	BUS	TOT	PCU	
16:00	0	0	47	6	3	7	63	73	0	0	63	6	0	1	70	71	0	0	58	3	1	0	62	63	327
16:15	0	0	36	2	1	0	39	40	0	0	69	11	2	4	86	92	0	0	32	2	0	0	34	34	260
16:30	0	0	39	4	0	0	43	43	0	0	64	9	2	3	78	83	0	0	41	2	0	0	43	43	275
16:45	0	0	52	8	2	2	64	68	0	0	76	7	2	1	86	89	2	0	40	2	1	0	45	44	305
H/TOT	0	0	174	20	6	9	209	224	0	0	272	33	6	9	320	335	2	0	171	9	2	0	184	184	1167
17:00	0	0	53	3	1	0	57	58	0	0	61	12	1	3	77	81	0	1	50	4	0	0	55	54	298
17:15	1	0	47	8	1	0	57	57	0	0	56	4	2	2	64	68	0	0	42	3	0	0	45	45	260
17:30	0	0	41	6	1	0	48	49	0	0	73	5	3	0	81	84	0	0	50	6	1	0	57	58	260
17:45	0	0	45	1	2	1	49	52	0	0	68	7	3	0	78	81	0	0	37	4	1	0	42	43	279
H/TOT	1	0	186	18	5	1	211	216	0	0	258	28	9	5	300	314	0	1	179	17	2	0	199	200	1097
18:00	0	0	45	6	0	0	51	51	0	0	79	7	3	1	90	94	0	0	39	3	0	0	42	42	289
18:15	0	1	43	2	1	0	47	47	0	0	49	3	1	0	53	54	0	0	29	3	0	0	32	32	186
H/TOT	0	1	88	8	1	0	98	98	0	0	128	10	4	1	143	148	0	0	68	6	0	0	74	74	475
P/TOT	1	1	448	46	12	10	518	538	0	0	658	71	19	15	763	797	2	1	418	32	4	0	457	458	2739

IDASO

25187 - Gorey **FEBRUARY 2025**

MANUAL CLASSIFIED JUNCTION TURNING COUNTS **IDA/25/187**

SITE: Site 3 DATE: 26th February 2025

LOCATION: Grattan St/McCurtain St DAY: Wednesday

	MOVEMENT 1 (A => C)								MOVEMENT 2 (A => B)								MOVEMENT 3 (B => A)							
TIME	**PCL**	**MCL**	**CAR**	**LGV**	**HGV**	**BUS**	**TOT**	**PCU**	**PCL**	**MCL**	**CAR**	**LGV**	**HGV**	**BUS**	**TOT**	**PCU**	**PCL**	**MCL**	**CAR**	**LGV**	**HGV**	**BUS**	**TOT**	**PCU**
07:30	0	0	25	6	0	1	32	33	0	0	21	8	0	2	31	33	0	0	19	5	0	0	24	24
07:45	0	0	36	11	3	0	50	53	0	0	42	4	0	0	46	46	0	0	35	10	1	0	46	47
H/TOT	0	0	61	17	3	1	82	86	0	0	63	12	0	2	77	79	0	0	54	15	1	0	70	71
08:00	0	0	61	5	2	3	71	76	0	0	54	3	2	2	61	65	0	0	71	8	5	4	88	97
08:15	0	0	44	7	3	0	54	57	0	0	92	5	0	1	98	99	2	0	115	5	5	1	128	132
08:30	0	0	46	4	1	0	51	52	0	0	101	7	1	0	109	110	0	0	117	6	2	1	126	129
08:45	0	0	39	2	0	3	44	47	0	0	118	4	1	2	125	128	0	0	70	6	1	0	77	78
H/TOT	0	0	190	18	6	6	220	232	0	0	365	19	4	5	393	402	2	0	373	25	13	6	419	436
09:00	0	0	49	4	2	0	55	57	0	0	80	6	1	0	87	88	0	0	53	6	4	0	63	67
09:15	0	0	33	6	2	1	42	45	0	0	49	6	1	0	56	57	0	0	37	7	5	0	49	54
09:30	1	0	35	7	3	0	46	48	0	0	48	3	1	0	52	53	0	0	30	5	6	0	41	47
09:45	0	0	21	9	3	1	34	38	0	0	47	2	6	0	55	61	1	0	34	2	4	0	41	44
H/TOT	1	0	138	26	10	2	177	188	0	0	224	17	9	0	250	259	1	0	154	20	19	0	194	212
P/TOT	1	0	389	61	19	9	479	506	0	0	652	48	13	7	720	740	3	0	581	60	33	6	683	719

	MOVEMENT 1 (A => C)								MOVEMENT 2 (A => B)								MOVEMENT 3 (B => A)							
TIME	**PCL**	**MCL**	**CAR**	**LGV**	**HGV**	**BUS**	**TOT**	**PCU**	**PCL**	**MCL**	**CAR**	**LGV**	**HGV**	**BUS**	**TOT**	**PCU**	**PCL**	**MCL**	**CAR**	**LGV**	**HGV**	**BUS**	**TOT**	**PCU**
16:00	1	0	19	4	3	1	28	31	0	0	89	8	2	9	108	119	0	0	87	8	1	0	96	97
16:15	0	0	17	1	1	0	19	20	1	0	56	2	1	0	60	60	0	0	70	11	1	3	85	89
16:30	0	0	24	1	0	0	25	25	1	0	52	15	0	0	68	67	0	0	74	7	2	3	86	91
16:45	0	0	28	6	1	0	35	36	0	0	72	14	2	1	89	92	0	0	93	6	1	1	101	103
H/TOT	1	0	88	12	5	1	107	112	2	0	269	39	5	10	325	338	0	0	324	32	5	7	368	380
17:00	0	0	27	1	0	1	29	30	0	1	58	5	1	1	66	67	0	0	83	12	0	2	97	99
17:15	1	0	21	3	1	0	26	26	0	0	61	11	0	0	72	72	0	0	79	6	0	1	86	87
17:30	0	0	25	4	0	0	29	29	0	0	48	3	0	0	51	51	0	0	92	9	2	0	103	105
17:45	0	0	25	2	3	0	30	33	0	0	86	2	0	1	89	90	0	0	77	8	2	0	87	89
H/TOT	1	0	98	10	4	1	114	118	0	1	253	21	1	2	278	280	0	0	331	35	4	3	373	380
18:00	0	0	22	2	0	0	24	24	0	0	77	5	2	0	84	86	0	0	84	6	1	0	91	92
18:15	0	0	23	4	0	0	27	27	0	1	46	3	1	0	51	51	0	0	55	4	0	0	59	59
H/TOT	0	0	45	6	0	0	51	51	0	1	123	8	3	0	135	137	0	0	139	10	1	0	150	151
P/TOT	2	0	231	28	9	2	272	281	2	2	645	68	9	12	738	755	0	0	794	77	10	10	891	911

IDASO

25187 - Gorey **FEBRUARY 2025**

MANUAL CLASSIFIED JUNCTION TURNING COUNTS **IDA/25/187**

SITE: Site 3 DATE: 26th February 2025

LOCATION: Grattan St/McCurtain St DAY: Wednesday

	MOVEMENT 4 (B => C)								MOVEMENT 5 (C => B)								MOVEMENT 6 (C => A)								PCU's Through Junction
TIME	PCL	MCL	CAR	LGV	HGV	BUS	TOT	PCU	PCL	MCL	CAR	LGV	HGV	BUS	TOT	PCU	PCL	MCL	CAR	LGV	HGV	BUS	TOT	PCU	
07:30	0	0	18	4	3	1	26	30	0	0	15	4	2	1	22	25	0	0	16	2	2	0	20	22	167
07:45	0	0	17	6	3	1	27	31	0	0	15	5	3	2	25	30	0	0	23	8	2	0	33	35	242
H/TOT	0	0	35	10	6	2	53	61	0	0	30	9	5	3	47	55	0	0	39	10	4	0	53	57	409
08:00	0	0	33	7	4	1	45	50	0	0	24	6	4	1	35	40	0	0	20	4	1	5	30	36	364
08:15	0	0	46	8	3	2	59	64	0	0	24	0	1	0	25	26	0	0	33	5	1	3	42	46	424
08:30	0	0	58	7	4	1	70	75	0	0	48	4	0	1	53	54	0	0	28	3	2	2	35	39	459
08:45	0	0	49	3	2	0	54	56	0	0	50	5	3	1	59	63	0	0	17	3	0	0	20	20	392
H/TOT	0	0	186	25	13	4	228	245	0	0	146	15	8	3	172	183	0	0	98	15	4	10	127	141	1639
09:00	0	0	47	4	3	0	54	57	1	0	36	10	4	1	52	56	0	0	24	2	1	1	28	30	355
09:15	0	0	38	1	6	1	46	53	0	0	21	4	5	0	30	35	0	0	16	2	3	0	21	24	268
09:30	0	0	36	4	2	1	43	46	0	0	28	4	1	0	33	34	0	0	5	5	2	1	13	16	244
09:45	0	0	30	3	1	0	34	35	0	0	32	2	3	0	37	40	0	0	15	3	1	1	20	22	240
H/TOT	0	0	151	12	12	2	177	191	1	0	117	20	13	1	152	165	0	0	60	12	7	3	82	92	1107
P/TOT	0	0	372	47	31	8	458	497	1	0	293	44	26	7	371	403	0	0	197	37	15	13	262	290	3155

	MOVEMENT 4 (B => C)								MOVEMENT 5 (C => B)								MOVEMENT 6 (C => A)								PCU's Through Junction
TIME	PCL	MCL	CAR	LGV	HGV	BUS	TOT	PCU	PCL	MCL	CAR	LGV	HGV	BUS	TOT	PCU	PCL	MCL	CAR	LGV	HGV	BUS	TOT	PCU	
16:00	0	0	30	4	2	0	36	38	0	0	48	9	1	0	58	59	0	0	31	5	0	0	36	36	380
16:15	0	1	32	6	4	3	46	52	1	0	39	2	3	0	45	47	0	0	34	6	1	1	42	44	312
16:30	0	0	27	4	2	0	33	35	0	0	42	5	7	2	56	65	0	0	34	5	0	0	39	39	322
16:45	0	0	15	2	1	0	18	19	0	0	46	3	3	0	52	55	2	0	26	6	2	0	36	36	341
H/TOT	0	1	104	16	9	3	133	144	1	0	175	19	14	2	211	226	2	0	125	22	3	1	153	155	1355
17:00	0	0	38	7	2	0	47	49	0	0	42	4	2	1	49	52	0	1	27	2	1	1	32	33	330
17:15	1	0	38	3	2	2	46	49	0	0	43	5	1	1	50	52	0	0	21	1	2	1	25	28	314
17:30	0	0	31	5	4	0	40	44	0	0	48	4	0	2	54	56	0	0	34	4	3	0	41	44	329
17:45	0	0	30	1	1	0	32	33	0	0	60	4	1	0	65	66	0	0	40	5	1	0	46	47	358
H/TOT	1	0	137	16	9	2	165	175	0	0	193	17	4	4	218	226	0	1	122	12	7	2	144	152	1331
18:00	0	0	38	7	0	1	46	47	0	0	43	2	1	1	47	49	0	0	33	3	2	1	39	42	340
18:15	0	0	24	2	0	1	27	28	0	0	39	2	0	1	42	43	0	0	32	1	1	0	34	35	243
H/TOT	0	0	62	9	0	2	73	75	0	0	82	4	1	2	89	92	0	0	65	4	3	1	73	77	583
P/TOT	1	1	303	41	18	7	371	394	1	0	450	40	19	8	518	544	2	1	312	38	13	4	370	384	3269

IDASO

25187 - Gorey **FEBRUARY 2025**

MANUAL CLASSIFIED JUNCTION TURNING COUNTS **IDA/25/187**

SITE: Site 4 DATE: 26th February 2025

LOCATION: McCurtain St/R772/Access To Tesco DAY: Wednesday

	MOVEMENT 1 (A => C)								MOVEMENT 2 (A => B)								MOVEMENT 3 (B => A)							
TIME	**PCL**	**MCL**	**CAR**	**LGV**	**HGV**	**BUS**	**TOT**	**PCU**	**PCL**	**MCL**	**CAR**	**LGV**	**HGV**	**BUS**	**TOT**	**PCU**	**PCL**	**MCL**	**CAR**	**LGV**	**HGV**	**BUS**	**TOT**	**PCU**
07:30	0	0	20	5	1	2	28	31	0	0	17	6	1	1	25	27	0	0	12	8	2	1	23	26
07:45	0	0	39	6	1	0	46	47	0	0	18	3	1	2	24	27	0	0	23	10	3	1	37	41
H/TOT	0	0	59	11	2	2	74	78	0	0	35	9	2	3	49	54	0	0	35	18	5	2	60	67
08:00	0	0	58	6	4	2	70	76	0	0	17	4	2	1	24	27	0	0	40	4	4	2	50	56
08:15	0	0	98	2	0	1	101	102	0	0	19	3	1	0	23	24	0	0	61	11	6	0	78	84
08:30	0	0	122	9	0	1	132	133	0	0	29	2	0	0	31	31	0	0	64	6	5	1	76	82
08:45	0	0	139	6	3	2	150	155	0	0	25	3	2	1	31	34	0	0	37	2	4	0	43	47
H/TOT	0	0	417	23	7	6	453	466	0	0	90	12	5	2	109	116	0	0	202	23	19	3	247	269
09:00	1	0	98	9	3	0	111	113	0	0	21	8	2	1	32	35	0	0	32	5	3	0	40	43
09:15	0	0	62	3	1	0	66	67	0	0	7	7	5	0	19	24	0	0	24	2	7	1	34	42
09:30	0	0	61	3	1	0	65	66	0	0	15	4	1	0	20	21	0	0	24	3	5	1	33	39
09:45	0	0	59	2	4	0	65	69	0	0	19	2	6	0	27	33	1	0	27	2	2	1	33	35
H/TOT	1	0	280	17	9	0	307	315	0	0	62	21	14	1	98	113	1	0	107	12	17	3	140	159
P/TOT	1	0	756	51	18	8	834	859	0	0	187	42	21	6	256	283	1	0	344	53	41	8	447	495

	MOVEMENT 1 (A => C)								MOVEMENT 2 (A => B)								MOVEMENT 3 (B => A)							
TIME	**PCL**	**MCL**	**CAR**	**LGV**	**HGV**	**BUS**	**TOT**	**PCU**	**PCL**	**MCL**	**CAR**	**LGV**	**HGV**	**BUS**	**TOT**	**PCU**	**PCL**	**MCL**	**CAR**	**LGV**	**HGV**	**BUS**	**TOT**	**PCU**
16:00	0	0	115	10	2	7	134	143	0	0	24	6	1	2	33	36	0	0	19	4	2	0	25	27
16:15	1	0	71	3	0	0	75	74	1	0	24	2	3	0	30	32	0	1	21	8	3	3	36	41
16:30	1	0	62	10	1	0	74	74	0	0	31	10	6	2	49	57	0	0	22	3	3	0	28	31
16:45	0	0	92	11	1	1	105	107	0	0	24	6	4	0	34	38	0	0	17	3	3	0	23	26
H/TOT	2	0	340	34	4	8	388	398	1	0	103	24	14	4	146	163	0	1	79	18	11	3	112	125
17:00	0	1	74	3	1	1	80	81	0	0	26	6	2	0	34	36	0	0	21	7	1	0	29	30
17:15	0	0	72	4	0	0	76	76	0	0	32	11	1	0	44	45	0	0	27	3	1	2	33	36
17:30	0	0	74	4	0	0	78	78	0	0	22	4	0	2	28	30	0	0	20	7	4	0	31	35
17:45	0	0	109	4	1	1	115	117	0	0	36	2	0	0	38	38	0	0	20	5	2	0	27	29
H/TOT	0	1	329	15	2	2	349	352	0	0	116	23	3	2	144	149	0	0	88	22	8	2	120	130
18:00	0	0	93	5	1	0	99	100	0	0	25	2	2	1	30	33	0	0	26	3	0	1	30	31
18:15	0	1	64	2	1	0	68	68	0	0	21	3	0	1	25	26	0	0	14	1	0	1	16	17
H/TOT	0	1	157	7	2	0	167	168	0	0	46	5	2	2	55	59	0	0	40	4	0	2	46	48
P/TOT	2	2	826	56	8	10	904	918	1	0	265	52	19	8	345	371	0	1	207	44	19	7	278	303

IDASO

25187 - Gorey **FEBRUARY 2025**

MANUAL CLASSIFIED JUNCTION TURNING COUNTS **IDA/25/187**

SITE: Site 4 DATE: 26th February 2025

LOCATION: McCurtain St/R772/Access To Tesco DAY: Wednesday

	MOVEMENT 4 (B => C)								MOVEMENT 5 (C => B)								MOVEMENT 6 (C => A)								PCU's Through Junction
TIME	PCL	MCL	CAR	LGV	HGV	BUS	TOT	PCU	PCL	MCL	CAR	LGV	HGV	BUS	TOT	PCU	PCL	MCL	CAR	LGV	HGV	BUS	TOT	PCU	
07:30	0	0	7	4	4	0	15	19	0	0	8	0	0	0	8	8	0	0	24	2	1	0	27	28	139
07:45	0	0	12	6	0	0	18	18	0	0	4	3	2	0	9	11	0	0	30	5	0	0	35	35	179
H/TOT	0	0	19	10	4	0	33	37	0	0	12	3	2	0	17	19	0	0	54	7	1	0	62	63	318
08:00	0	0	21	3	2	0	26	28	0	0	12	1	0	0	13	13	0	0	67	11	5	3	86	94	294
08:15	0	0	24	2	2	0	28	30	0	0	12	3	4	0	19	23	2	0	101	3	2	3	111	114	377
08:30	0	0	21	1	3	0	25	28	0	0	12	1	1	0	14	15	0	0	109	6	1	1	117	119	408
08:45	0	0	20	1	1	0	22	23	0	0	13	3	2	0	18	20	0	0	84	7	0	0	91	91	370
H/TOT	0	0	86	7	8	0	101	109	0	0	49	8	7	0	64	71	2	0	361	27	8	7	405	418	1449
09:00	0	0	29	6	0	0	35	35	0	0	10	0	4	0	14	18	0	0	66	6	3	0	75	78	322
09:15	0	0	20	0	2	0	22	24	0	0	10	2	2	0	14	16	0	0	50	6	5	0	61	66	239
09:30	0	0	16	2	3	0	21	24	0	0	9	1	2	0	12	14	0	0	40	6	3	0	49	52	216
09:45	1	0	17	1	1	0	20	20	0	0	10	1	4	0	15	19	0	0	37	3	3	0	43	46	222
H/TOT	1	0	82	9	6	0	98	103	0	0	39	4	12	0	55	67	0	0	193	21	14	0	228	242	999
P/TOT	1	0	187	26	18	0	232	249	0	0	100	15	21	0	136	157	2	0	608	55	23	7	695	723	2766

	MOVEMENT 4 (B => C)								MOVEMENT 5 (C => B)								MOVEMENT 6 (C => A)								PCU's Through Junction
TIME	PCL	MCL	CAR	LGV	HGV	BUS	TOT	PCU	PCL	MCL	CAR	LGV	HGV	BUS	TOT	PCU	PCL	MCL	CAR	LGV	HGV	BUS	TOT	PCU	
16:00	0	0	11	0	2	0	13	15	0	0	38	2	2	0	42	44	0	0	97	9	1	0	107	108	373
16:15	0	1	9	2	2	0	14	15	0	0	27	1	0	0	28	28	0	0	82	8	1	3	94	98	288
16:30	0	0	9	1	2	0	12	14	0	1	21	2	2	0	26	27	0	0	78	8	1	3	90	94	297
16:45	0	0	14	1	3	0	18	21	0	0	26	2	1	0	29	30	0	0	88	5	0	1	94	95	317
H/TOT	0	1	43	4	9	0	57	65	0	1	112	7	5	0	125	129	0	0	345	30	3	7	385	395	1275
17:00	0	0	17	3	2	0	22	24	0	0	32	1	1	0	34	35	0	0	99	12	0	1	112	113	319
17:15	0	0	13	3	2	0	18	20	0	0	23	5	3	0	31	34	1	0	90	6	1	0	98	98	309
17:30	0	0	26	2	0	0	28	28	0	0	28	2	0	0	30	30	0	0	103	8	2	0	113	115	316
17:45	0	0	18	1	0	0	19	19	0	0	28	3	0	0	31	31	0	0	88	4	1	0	93	94	328
H/TOT	0	0	74	9	4	0	87	91	0	0	111	11	4	0	126	130	1	0	380	30	4	1	416	420	1272
18:00	0	0	12	2	1	0	15	16	0	0	32	0	0	1	33	34	0	0	95	9	1	0	105	106	320
18:15	0	0	13	0	1	0	14	15	0	0	18	1	0	0	19	19	0	0	65	5	0	0	70	70	215
H/TOT	0	0	25	2	2	0	29	31	0	0	50	1	0	1	52	53	0	0	160	14	1	0	175	176	535
P/TOT	0	1	142	15	15	0	173	187	0	1	273	19	9	1	303	312	1	0	885	74	8	8	976	991	3082

APPENDIX C

TRICS Output Data Sheets
(Residential Housing / Apartments and Creche)

TRIP RATE CALCULATION SELECTION PARAMETERS:

Land Use: 03 - RESIDENTIAL

Category: A - HOUSES PRIVATELY OWNED

Selected Vehicle Type: Total Vehicles

Selected regions and areas:

12	**CONNAUGHT**		
	CS	SLIGO	2 days
	LT	LEITRIM	1 day
	MA	MAYO	1 day
13	**MUNSTER**		
	TI	TIPPERARY	1 day
14	**LEINSTER**		
	CC	CARLOW	1 day
	LU	LOUTH	1 day
	WC	WICKLOW	2 days
15	**GREATER DUBLIN**		
	DL	DUBLIN	1 day
16	**ULSTER (REPUBLIC OF IRELAND)**		
	CV	CAVAN	2 days
	DN	DONEGAL	3 days
	MG	MONAGHAN	2 days

This section displays the number of survey days per TRICS® sub-region in the selected set.

Database right of TRICS Consortium Ltd, 2025. All rights reserved

1	**CC-03-A-01**	**DETACHED HOUSES**	**CARLOW**

R417 ANTHY ROAD
CARLOW
Edge of Town
Residential Zone
Site area: 1.45 hect
Survey date: Wednesday 25/05/2016 Survey Type: Unknown

2	**CS-03-A-03**	**MIXED HOUSES**	**SLIGO**

TOP ROAD
STRANDHILL
STRANDHILL
Neighbourhood Centre
Village
Site area: 1.2 hect
Survey date: Thursday 27/10/2016 Survey Type: Unknown

3	**CS-03-A-04**	**DETACHED & SEMI-DETACHED**	**SLIGO**

R292
STRANDHILL
Neighbourhood Centre
Village
Site area: 1.68 hect
Survey date: Thursday 27/10/2016 Survey Type: Unknown

4	**CV-03-A-02**	**DETACHED & SEMI DETACHED**	**CAVAN**

R212 DUBLIN ROAD
CAVAN
KILLYNEBBER
Edge of Town
No Sub Category
Site area: 47 hect
Survey date: Monday 22/05/2017 Survey Type: Unknown

5	**CV-03-A-03**	**DETACHED HOUSES**	**CAVAN**

R212 DUBLIN ROAD
CAVAN
PULLAMORE NEAR
Edge of Town
No Sub Category
Site area: 2.6 hect
Survey date: Monday 22/05/2017 Survey Type: Unknown

6	**DL-03-A-10**	**SEMI DETACHED & DETACHED**	**DUBLIN**

R124
MALAHIDE
SAINT HELENS
Edge of Town
Residential Zone
Site area: 2.9 hect
Survey date: Wednesday 20/06/2018 Survey Type: Unknown

7	**DN-03-A-06**	**DETACHED HOUSING**	**DONEGAL**

GLENFIN ROAD
BALLYBOFEY
Edge of Town
Residential Zone
Site area: 1.02 hect
Survey date: Wednesday 10/10/2018 Survey Type: Unknown

8	**DN-03-A-07**	**DETACHED & SEMI-DETACHED**	**DONEGAL**

ST ORANS ROAD
BUNCRANA

Database right of TRICS Consortium Ltd, 2025. All rights reserved

Edge of Town Centre
Residential Zone
Site area: 0.992 hect
Survey date: Wednesday 29/05/2019 Survey Type: Unknown

9	**DN-03-A-08**	**SEMI DETACHED & DETACHED**	**DONEGAL**

CHURCH ROAD
CARNDONAGH
Suburban Area
Residential Zone
Site area: 1.88 hect
Survey date: Wednesday 30/09/2020 Survey Type: Unknown

10	**LT-03-A-02**	**BUNGALOWS**	**LEITRIM**

ARD ÁLAINN
CARRICK-ON-SHANNON
GALLOW'S HILL
Edge of Town Centre
Residential Zone
Site area: 1.306 hect
Survey date: Monday 22/05/2017 Survey Type: Unknown

11	**LU-03-A-01**	**TERRACED & SEMI-DETACHED**	**LOUTH**

RATHMULLAN ROAD
DROGHEDA
Neighbourhood Centre
Residential Zone
Site area: 3.67 hect
Survey date: Tuesday 21/09/2021 Survey Type: Unknown

12	**MA-03-A-02**	**SEMI-DETACHED HOUSES**	**MAYO**

CONVENT ROAD
CLAREMORRIS
Edge of Town Centre
No Sub Category
Site area: 1.86 hect
Survey date: Wednesday 15/09/2021 Survey Type: Unknown

13	**MG-03-A-01**	**SEMI-DETACHED HOUSES**	**MONAGHAN**

ORIEL WAY
MONAGHAN
Suburban Area
Residential Zone
Site area: 3.3 hect
Survey date: Tuesday 12/10/2021 Survey Type: Unknown

14	**MG-03-A-02**	**MIXED HOUSES**	**MONAGHAN**

GLEN ROAD
MONAGHAN
Edge of Town Centre
Residential Zone
Site area: 5.45 hect
Survey date: Tuesday 12/10/2021 Survey Type: Unknown

15	**TI-03-A-01**	**MIXED HOUSES**	**TIPPERARY**

BRITTAS ROAD
THURLES
Edge of Town
Out of Town
Site area: 3.43 hect
Survey date: Thursday 17/06/2021 Survey Type: Unknown

16	**WC-03-A-01**	**DETACHED HOUSES**	**WICKLOW**

Database right of TRICS Consortium Ltd, 2025. All rights reserved

STATION ROAD
WICKLOW
CORPORATION MURRAGH
Edge of Town
No Sub Category
Site area: 2.443 hect
Survey date: Monday 28/05/2018 Survey Type: Unknown

17 **WC-03-A-02** **DETACHED HOUSES** **WICKLOW**
MARLTON ROAD
WICKLOW
FRIARSHILL
Edge of Town Centre
Residential Zone
Site area: 2.72 hect
Survey date: Monday 28/05/2018 Survey Type: Unknown

DESELECTED SURVEYS

Site Ref	Survey Date	Reason for Deselection
TY-03-A-02	14-03-2019	Not ROI

Database right of TRICS Consortium Ltd, 2025. All rights reserved

TRIP RATE for Land Use 03 - RESIDENTIAL/A - HOUSES PRIVATELY OWNED

Total Vehicles

Calculation factor: 1 DWELLS

**BOLD print indicates peak (busiest) period*

Time Range	No. Days	Ave. DWELLS	Arrivals	Departures	Totals
00:00-01:00					
01:00-02:00					
02:00-03:00					
03:00-04:00					
04:00-05:00					
05:00-06:00					
06:00-07:00					
07:00-08:00	**17**	**47**	**0.080**	**0.212**	**0.292**
08:00-09:00	**17**	**47**	**0.202**	**0.568**	**0.770**
09:00-10:00	**17**	**47**	**0.226**	**0.248**	**0.474**
10:00-11:00	**17**	**47**	**0.193**	**0.207**	**0.400**
11:00-12:00	**17**	**47**	**0.188**	**0.232**	**0.420**
12:00-13:00	**17**	**47**	**0.251**	**0.240**	**0.491**
13:00-14:00	**17**	**47**	**0.272**	**0.262**	**0.534**
14:00-15:00	**17**	**47**	**0.300**	**0.321**	**0.621**
15:00-16:00	**17**	**47**	**0.330**	**0.307**	**0.637**
16:00-17:00	**17**	**47**	**0.376**	**0.263**	**0.639**
17:00-18:00	**17**	**47**	**0.488**	**0.311**	**0.799**
18:00-19:00	**17**	**47**	**0.375**	**0.292**	**0.667**
19:00-20:00					
20:00-21:00					
21:00-22:00					
22:00-23:00					
23:00-00:00					
Total Rates:			**3.281**	**3.463**	**6.744**

This section displays the trip rate results based on the selected set of surveys and the selected count type (shown just above the table). It is split by three main columns, representing arrivals trips, departures trips, and total trips (arrivals plus departures). Within each of these main columns are three sub-columns. These display the number of survey days where count data is included (per time period), the average value of the selected trip rate calculation parameter (per time period), and the trip rate result (per time period). Total trip rates (the sum of the column) are also displayed at the foot of the table.

*To obtain a trip rate, the average (mean) trip rate parameter value (TRP) is first calculated for all selected survey days that have count data available for the stated time period. The average (mean) number of arrivals, departures or totals (whichever applies) is also calculated (COUNT) for all selected survey days that have count data available for the stated time period. Then, the average count is divided by the average trip rate parameter value, and multiplied by the stated calculation factor (shown just above the table and abbreviated here as FACT). So, the method is: COUNT/TRP*FACT. Trip rates are then rounded to 3 decimal places.*

The survey data, graphs and all associated supporting information, contained within the TRICS Database are published by TRICS Consortium Limited ("the Company") and the Company claims copyright and database rights in this published work. The Company authorises those who possess a current TRICS licence to access the TRICS Database and copy the data contained within the TRICS Database for the licence holders' use only. Any resulting copy must retain all copyrights and other proprietary notices, and any disclaimer contained thereon.

The Company accepts no responsibility for loss which may arise from reliance on data contained in the TRICS Database. [No warranty of any kind, express or implied, is made as to the data contained in the TRICS Database.]

Database right of TRICS Consortium Ltd, 2025. All rights reserved

Parameter Summary:

Trip rate parameter range selected:	4 - 4334 (units: DWELLS)
Survey date date range:	25/05/2016 - 12/10/2021
Number of weekdays (Monday-Friday):	17
Number of Saturdays:	0
Number of Sundays:	0
Surveys automatically removed from selection:	136
Surveys manually removed from selection:	0

This section displays a quick summary of some of the data filtering selections made by the TRICS® user. The trip rate calculation parameter range of all selected surveys is displayed first, followed by the range of minimum and maximum survey dates selected by the user. Then, the total number of selected weekdays and weekend days in the selected set of surveys are show. Finally, the number of survey days that have been manually removed from the selected set outside of the standard filtering procedure are displayed.

Database right of TRICS Consortium Ltd, 2025. All rights reserved

1 **LU-03-C-04** **BLOCKS OF FLATS** **LOUTH**
RIVER COURT
DROGHEDA
Neighbourhood Centre
Residential Zone
Site area: 0.93 hect
Survey date: Wednesday 22/09/2021 Survey Type: Manual

2 **MA-03-C-01** **BLOCKS OF FLATS** **MAYO**
KNOCK ROAD
CLAREMORRIS
Edge of Town Centre
No Sub Category
Site area: 0.53 hect
Survey date: Tuesday 14/09/2021 Survey Type: Manual

3 **WX-03-C-01** **BLOCKS OF FLATS** **WEXFORD**
UPPER GEORGE'S STREET
WEXFORD
Edge of Town Centre
Residential Zone
Site area: 0.41 hect
Survey date: Thursday 20/04/2023 Survey Type: Manual

DESELECTED SURVEYS

Site Ref	Survey Date	Reason for Deselection
BH-03-C-01	26-09-2017	Not ROI
BY-03-C-01	08-09-2020	Not ROI
CA-03-C-03	18-09-2017	Not ROI
CO-03-C-01	26-03-2018	Not ROI
CT-03-C-01	15-05-2018	Not ROI
CT-03-C-02	15-05-2018	Not ROI
CT-03-C-03	15-05-2018	Not ROI
DV-03-C-01	10-07-2017	Not ROI
DY-03-C-03	25-09-2019	Not ROI
HF-03-C-01	09-06-2021	Not ROI
HF-03-C-03	14-11-2019	Not ROI
HF-03-C-04	10-06-2021	Not ROI
HF-03-C-05	07-06-2021	Not ROI
HF-03-C-06	08-06-2023	Not ROI
HF-03-C-07	07-06-2023	Not ROI
HF-03-C-08	06-06-2023	Not ROI
HI-03-C-02	19-04-2023	Not ROI
HO-03-C-04	03-07-2018	Not ROI
HV-03-C-02	22-11-2016	Not ROI
LE-03-C-01	16-10-2020	Not ROI
MR-03-C-03	07-09-2023	Not ROI
MS-03-C-04	12-04-2021	Not ROI
NF-03-C-02	18-11-2019	Not ROI
NG-03-C-01	08-11-2016	Not ROI
NG-03-C-02	09-11-2016	Not ROI
NG-03-C-03	02-10-2023	Not ROI

Database right of TRICS Consortium Ltd, 2025. All rights reserved

Site Ref	Survey Date	Reason for Deselection
PO-03-C-01	05-06-2018	Not ROI
SF-03-C-04	16-09-2020	Not ROI
SF-03-C-05	23-06-2021	Not ROI
SH-03-C-01	19-06-2023	Not ROI
SH-03-C-02	16-06-2023	Not ROI
SR-03-C-03	01-09-2020	Not ROI
TH-03-C-04	21-06-2019	Not ROI
TW-03-C-01	15-10-2021	Not ROI
WM-03-C-04	11-11-2016	Not ROI
WS-03-C-01	11-05-2022	Not ROI

Database right of TRICS Consortium Ltd, 2025. All rights reserved

TRIP RATE for Land Use 03 - RESIDENTIAL/C - FLATS PRIVATELY OWNED

Total Vehicles

Calculation factor: 1 DWELLS

**BOLD print indicates peak (busiest) period*

Time Range	No. Days	Ave. DWELLS	Arrivals	Departures	Totals
00:00-01:00					
01:00-02:00					
02:00-03:00					
03:00-04:00					
04:00-05:00					
05:00-06:00					
06:00-07:00					
07:00-08:00	3	31	0.033	0.196	0.229
08:00-09:00	3	31	0.087	0.141	0.228
09:00-10:00	3	31	0.174	0.163	0.337
10:00-11:00	3	31	0.120	0.109	0.229
11:00-12:00	3	31	0.054	0.130	0.184
12:00-13:00	3	31	0.087	0.087	0.174
13:00-14:00	3	31	0.130	0.087	0.217
14:00-15:00	3	31	0.120	0.196	0.316
15:00-16:00	3	31	0.130	0.141	0.271
16:00-17:00	3	31	0.130	0.141	0.271
17:00-18:00	3	31	0.196	0.185	0.381
18:00-19:00	3	31	0.239	0.109	0.348
19:00-20:00					
20:00-21:00					
21:00-22:00					
22:00-23:00					
23:00-00:00					
Total Rates:			1.500	1.685	3.185

Parameter Summary:

Trip rate parameter range selected:	6 - 724 (units: DWELLS)
Survey date date range:	14/09/2021 - 20/04/2023
Number of weekdays (Monday-Friday):	3
Number of Saturdays:	0
Number of Sundays:	0
Surveys automatically removed from selection:	36
Surveys manually removed from selection:	0

This section displays a quick summary of some of the data filtering selections made by the TRICS® user. The trip rate calculation parameter range of all selected surveys is displayed first, followed by the range of minimum and maximum survey dates selected by the user. Then, the total number of selected weekdays and weekend days in the selected set of surveys are show. Finally, the number of survey days that have been manually removed from the selected set outside of the standard filtering procedure are displayed.

Database right of TRICS Consortium Ltd, 2025. All rights reserved

1 **MG-04-D-01** **NURSERY** **MONAGHAN**
THE GRANGE
MONAGHAN
Edge of Town Centre
Residential Zone
Gross floor area: 810 sqm
Survey date: Tuesday 12/10/2021 Survey Type: Unknown

2 **RO-04-D-03** **NURSERY** **ROSCOMMON**
CIRCULAR ROAD
ROSCOMMON
Edge of Town Centre
Residential Zone
Gross floor area: 509 sqm
Survey date: Tuesday 14/09/2021 Survey Type: Unknown

DESELECTED SURVEYS

Site Ref	Survey Date	Reason for Deselection
BA-04-D-02	15-09-2022	Not ROI
BH-04-D-01	22-09-2017	Not ROI
BR-04-D-01	02-05-2023	Not ROI
CA-04-D-01	26-06-2023	Not ROI
DR-04-D-01	13-05-2022	Not ROI
DU-04-D-01	24-04-2017	Not ROI
DY-04-D-02	12-07-2018	Not ROI
LN-04-D-01	31-10-2017	Not ROI
MM-04-D-01	27-09-2019	Not ROI
NN-04-D-01	07-06-2022	Not ROI
NW-04-D-01	12-10-2022	Not ROI
NY-04-D-02	10-05-2022	Not ROI
NY-04-D-03	12-06-2023	Not ROI
RB-04-D-02	22-11-2017	Not ROI
RC-04-D-01	06-05-2021	Not ROI
RO-04-D-02	27-04-2018	Not ROI
SD-04-D-01	22-09-2016	Not ROI
TV-04-D-01	19-05-2017	Not ROI
TW-04-D-03	21-05-2019	Not ROI
WK-04-D-01	29-06-2018	Not ROI
WS-04-D-01	13-05-2022	Not ROI

Database right of TRICS Consortium Ltd, 2025. All rights reserved

TRIP RATE for Land Use 04 - EDUCATION/D - NURSERY

Total Vehicles

Calculation factor: 100 sqm

**BOLD print indicates peak (busiest) period*

Time Range	No. Days	Ave. GFA	Arrivals	Departures	Totals
00:00-01:00					
01:00-02:00					
02:00-03:00					
03:00-04:00					
04:00-05:00					
05:00-06:00					
06:00-07:00	**1**	**509**	**0.000**	**0.000**	**0.000**
07:00-08:00	**2**	**660**	**0.227**	**0.152**	**0.379**
08:00-09:00	**2**	**660**	**3.942**	**2.426**	**6.368**
09:00-10:00	**2**	**660**	**3.184**	**3.412**	**6.596**
10:00-11:00	**2**	**660**	**0.152**	**0.152**	**0.304**
11:00-12:00	**2**	**660**	**0.910**	**0.152**	**1.062**
12:00-13:00	**2**	**660**	**1.440**	**2.274**	**3.714**
13:00-14:00	**2**	**660**	**0.910**	**0.986**	**1.896**
14:00-15:00	**2**	**660**	**1.440**	**0.758**	**2.198**
15:00-16:00	**2**	**660**	**1.289**	**0.682**	**1.971**
16:00-17:00	**2**	**660**	**1.289**	**1.820**	**3.109**
17:00-18:00	**2**	**660**	**2.805**	**4.246**	**7.051**
18:00-19:00	**2**	**660**	**0.000**	**0.455**	**0.455**
19:00-20:00					
20:00-21:00					
21:00-22:00					
22:00-23:00					
23:00-00:00					
Total Rates:			**17.588**	**17.515**	**35.103**

This section displays the trip rate results based on the selected set of surveys and the selected count type (shown just above the table). It is split by three main columns, representing arrivals trips, departures trips, and total trips (arrivals plus departures). Within each of these main columns are three sub-columns. These display the number of survey days where count data is included (per time period), the average value of the selected trip rate calculation parameter (per time period), and the trip rate result (per time period). Total trip rates (the sum of the column) are also displayed at the foot of the table.

*To obtain a trip rate, the average (mean) trip rate parameter value (TRP) is first calculated for all selected survey days that have count data available for the stated time period. The average (mean) number of arrivals, departures or totals (whichever applies) is also calculated (COUNT) for all selected survey days that have count data available for the stated time period. Then, the average count is divided by the average trip rate parameter value, and multiplied by the stated calculation factor (shown just above the table and abbreviated here as FACT). So, the method is: COUNT/TRP*FACT. Trip rates are then rounded to 3 decimal places.*

The survey data, graphs and all associated supporting information, contained within the TRICS Database are published by TRICS Consortium Limited ("the Company") and the Company claims copyright and database rights in this published work. The Company authorises those who possess a current TRICS licence to access the TRICS Database and copy the data contained within the TRICS Database for the licence holders' use only. Any resulting copy must retain all copyrights and other proprietary notices, and any disclaimer contained thereon.

The Company accepts no responsibility for loss which may arise from reliance on data contained in the TRICS Database. [No warranty of any kind, express or implied, is made as to the data contained in the TRICS Database.]

Database right of TRICS Consortium Ltd, 2025. All rights reserved

Parameter Summary:

Trip rate parameter range selected:	109 - 2350 (units: sqm)
Survey date date range:	14/09/2021 - 12/10/2021
Number of weekdays (Monday-Friday):	2
Number of Saturdays:	0
Number of Sundays:	0
Surveys automatically removed from selection:	21
Surveys manually removed from selection:	0

This section displays a quick summary of some of the data filtering selections made by the TRICS® user. The trip rate calculation parameter range of all selected surveys is displayed first, followed by the range of minimum and maximum survey dates selected by the user. Then, the total number of selected weekdays and weekend days in the selected set of surveys are show. Finally, the number of survey days that have been manually removed from the selected set outside of the standard filtering procedure are displayed.

Database right of TRICS Consortium Ltd, 2025. All rights reserved

APPENDIX D

Traffic Calculations, Trip Distribution, Network Traffic Flow Diagrams & Projections.

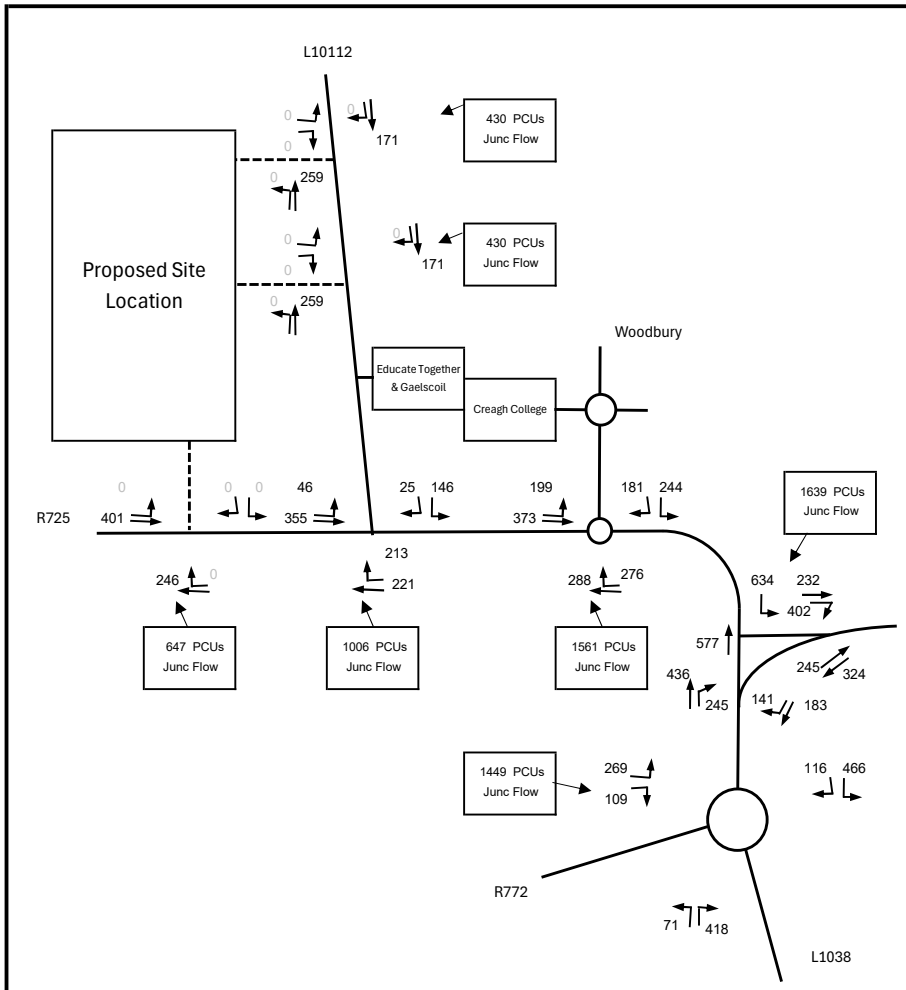

Weekday AM Peak Hour 8-9AM

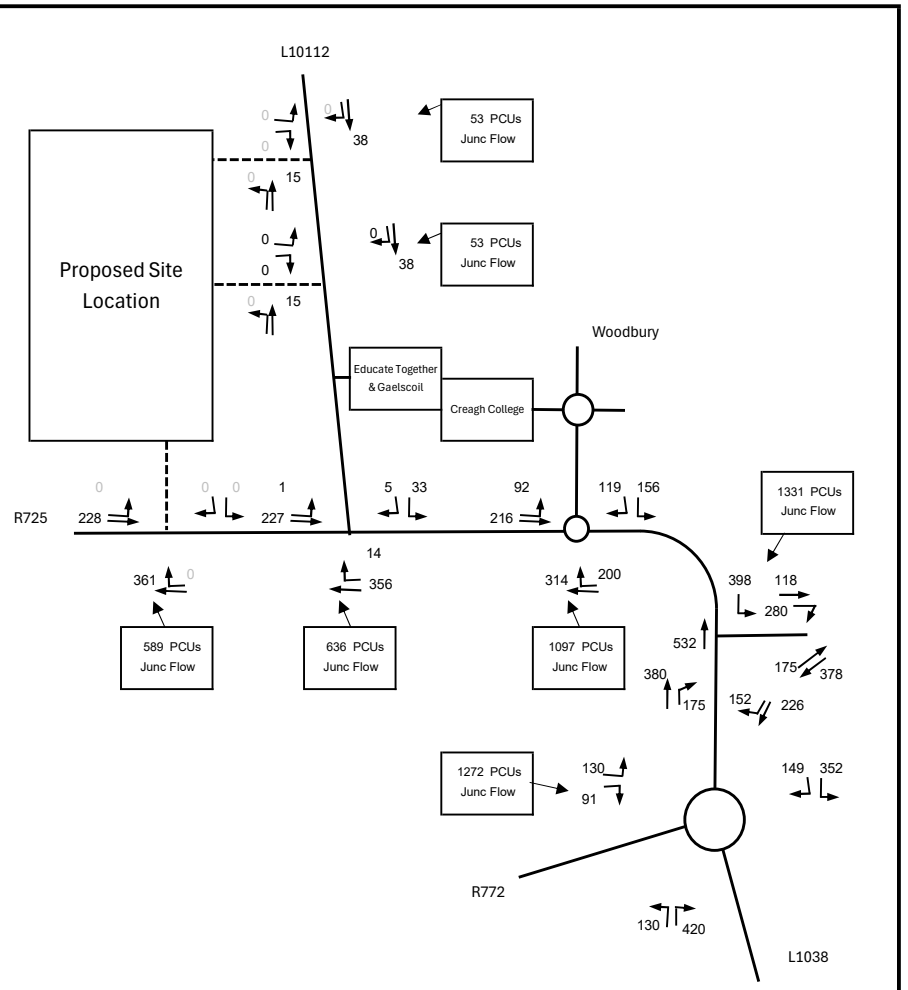

Weekday PM Peak Hour 5-6PM

AS SURVEYED JUNCTION TURNING MOVEMENT SURVEYS *2025* (PCUs)

TII PE-PAG-02017 Project Appraisal Guidelines for National Roads Unit 5.3 (Travel Demand Projections 2021, Table 6.1: Central Growth Rates: Link-Based Growth Factors (Wexford Area)	2025 to 2028 = 1.021 2028 to 2043 = 1.038

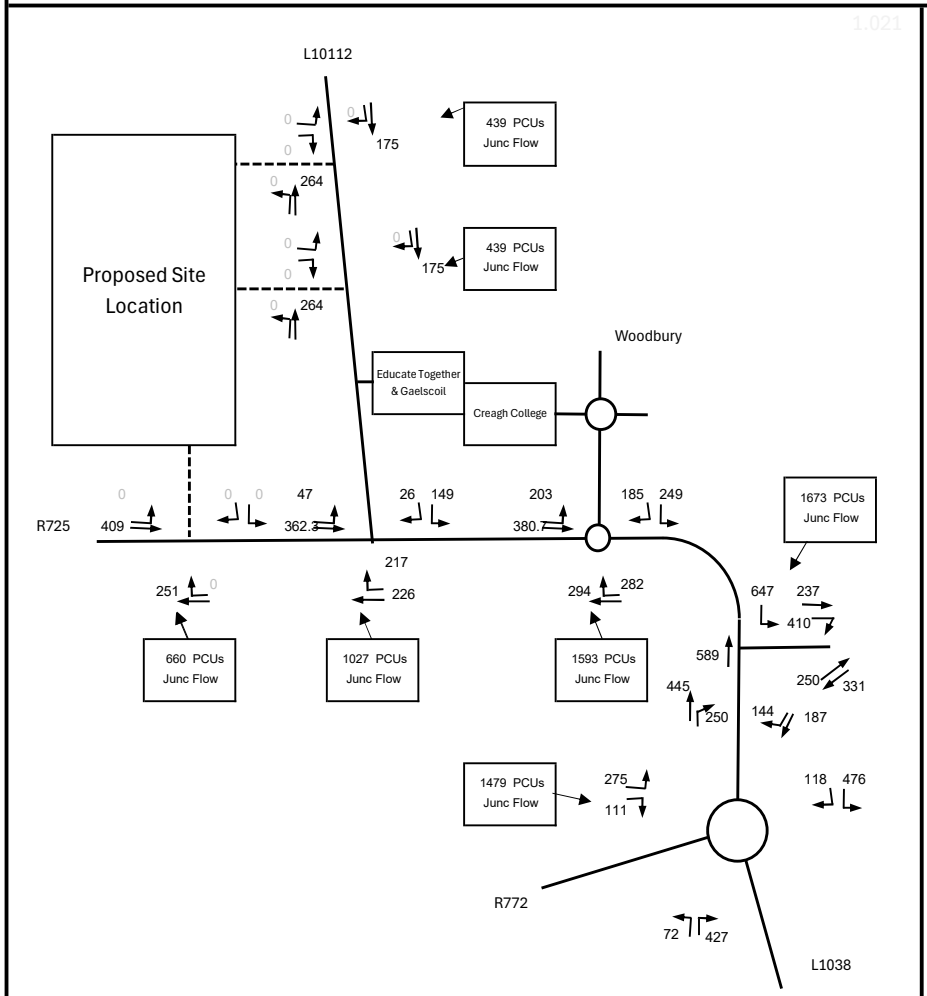

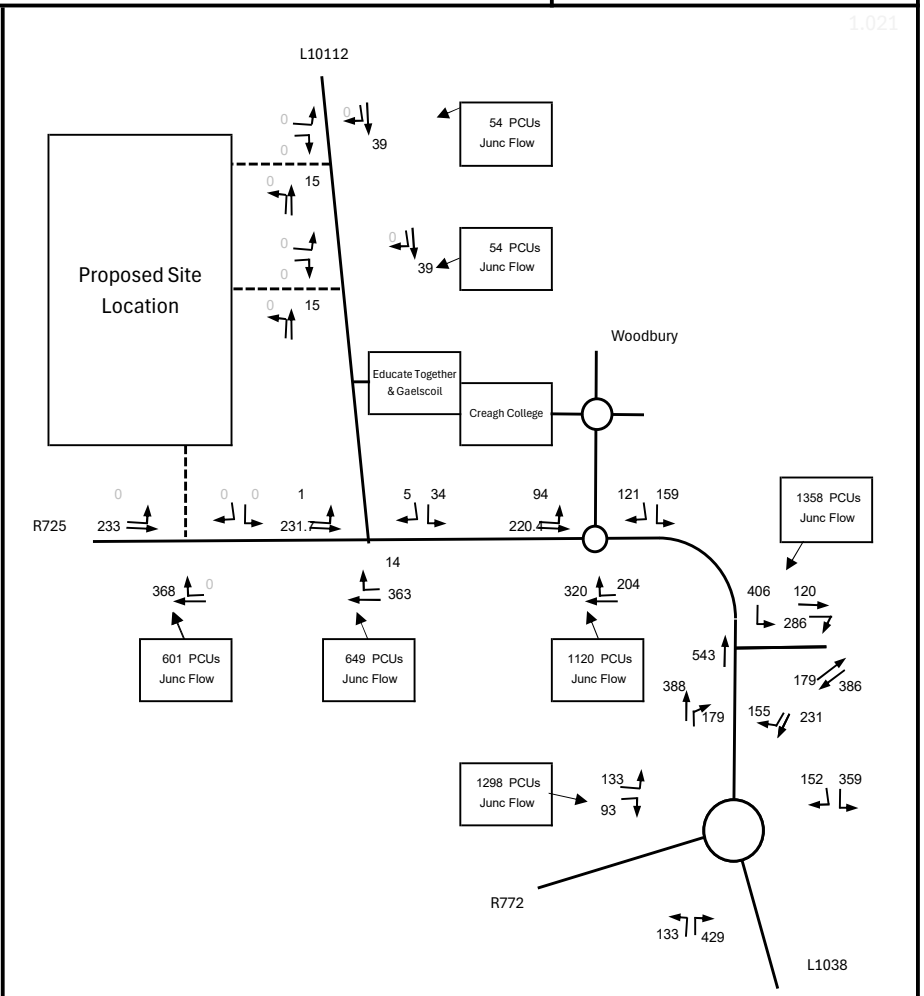

Weekday AM Peak Hour 8-9AM	Weekday PM Peak Hour 5-6PM

SELECTED OPENING YEAR 2028 FLOWS WITH TII GROWTH APPLIED (WITHOUT PROPOSED DEVELOPMENT) (PCUs)

TII PE-PAG-02017 Project Appraisal Guidelines for National Roads Unit 5.3 (Travel Demand Projections 2021, Table 6.1: Central Growth Rates: Link-Based Growth Factors (Wexford Area)	2025 to 2028 = 1.021 2028 to 2043 = 1.038

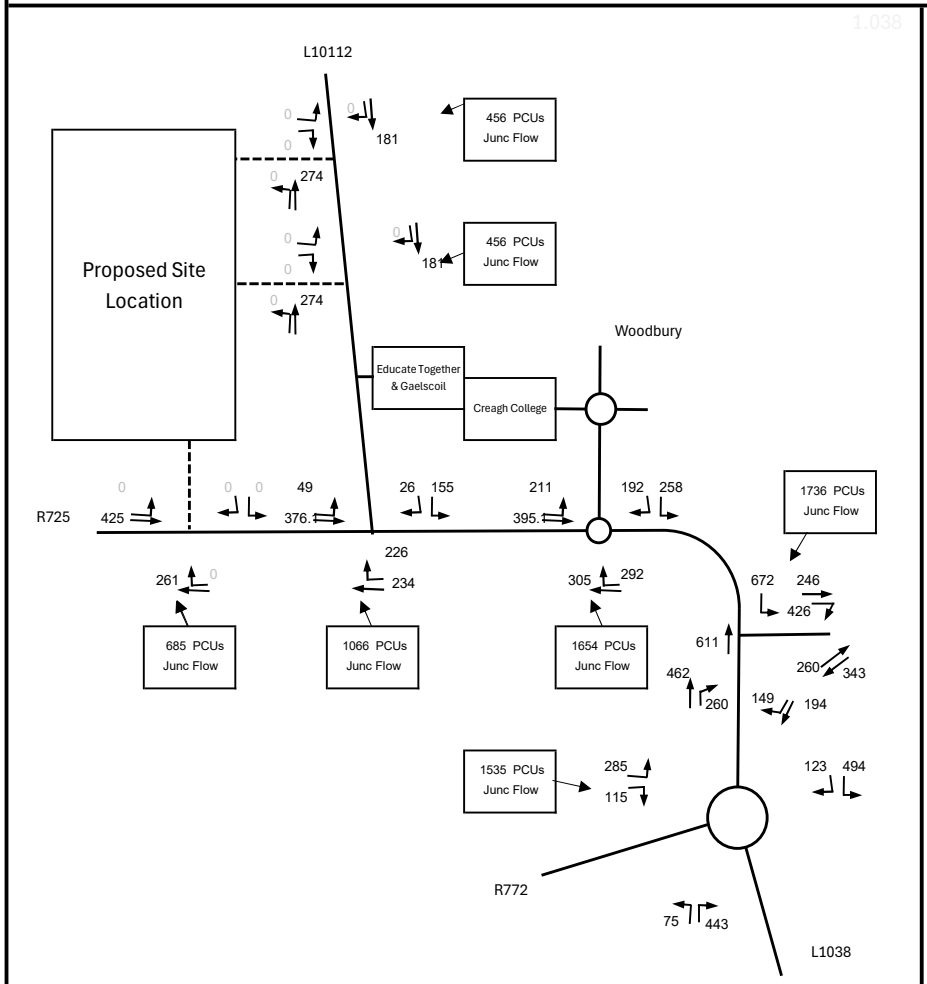

Weekday AM Peak Hour 8-9AM

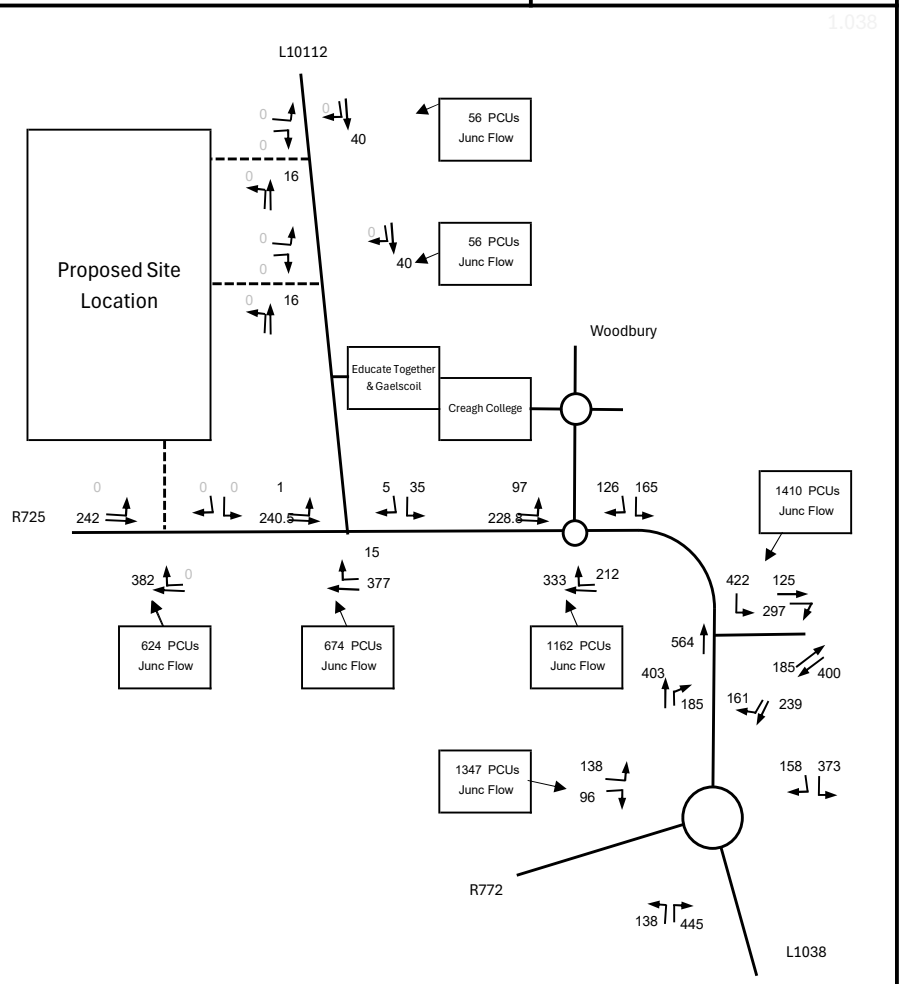

Weekday PM Peak Hour 5-6PM

SELECTED DESIGN YEAR 2043 FLOWS WITH TII GROWTH APPLIED (WITHOUT PROPOSED DEVELOPMENT) (PCUs)

TRICS ASSESSMENT OF TRAFFIC GENERATED BY PROPOSED DEVELOPMENT ELEMENTS (*USING TRICS OUTPUT IN APPENDIX C*)

TRICS ASSESSMENT OF WORST-CASE TRAFFIC GENERATED BY PROPOSED DEVELOPMENT (REFER APPENDIX C)

349 No Houses	Arrivals (PCUs)		Departures (PCUs)		Total 2-Way Traffic	
Network Hour	Per Unit	Site	Per Unit	Site		
Weekday AM Peak Hr 8-9	0.202	70	0.568	198	269	349 Houses
Weekday PM Peak Hr 5-6	0.488	170	0.311	109	279	
24 Hours	3.281	1145	3.463	1209	2354	
64 Apts/Duplex	**Arrivals (PCUs)**		**Departures (PCUs)**		**Total 2-Way Traffic**	
Network Hour	Per Unit	Site	Per Unit	Site		
Weekday AM Peak Hr 8-9	0.087	6	0.141	9	15	64 Apartments
Weekday PM Peak Hr 5-6	0.196	13	0.185	12	24	
24 Hours	1.500	96	1.685	108	204	
570 sqm Creche*	**Arrivals (PCUs)**		**Departures (PCUs)**		**Total 2-Way Traffic**	
Network Hour	Per Unit	Site	Per Unit	Site		
Weekday AM Peak Hr 8-9	3.184	18	3.412	19	38	570sqm Creche
Weekday PM Peak Hr 5-6	2.805	16	4.246	24	40	
24 Hours	17.588	100	17.515	100	200	

TOTAL DEVELOPMENT TRIPS				
Network Hour	Arrivals	Departures	Total 2-Way	
Weekday AM Peak Hr 8-9	80	211	291	Full Site
Weekday PM Peak Hr 5-6	186	125	311	
24 Hours	1241	1316	2558	

*80% of Creche Trips will be internal trips

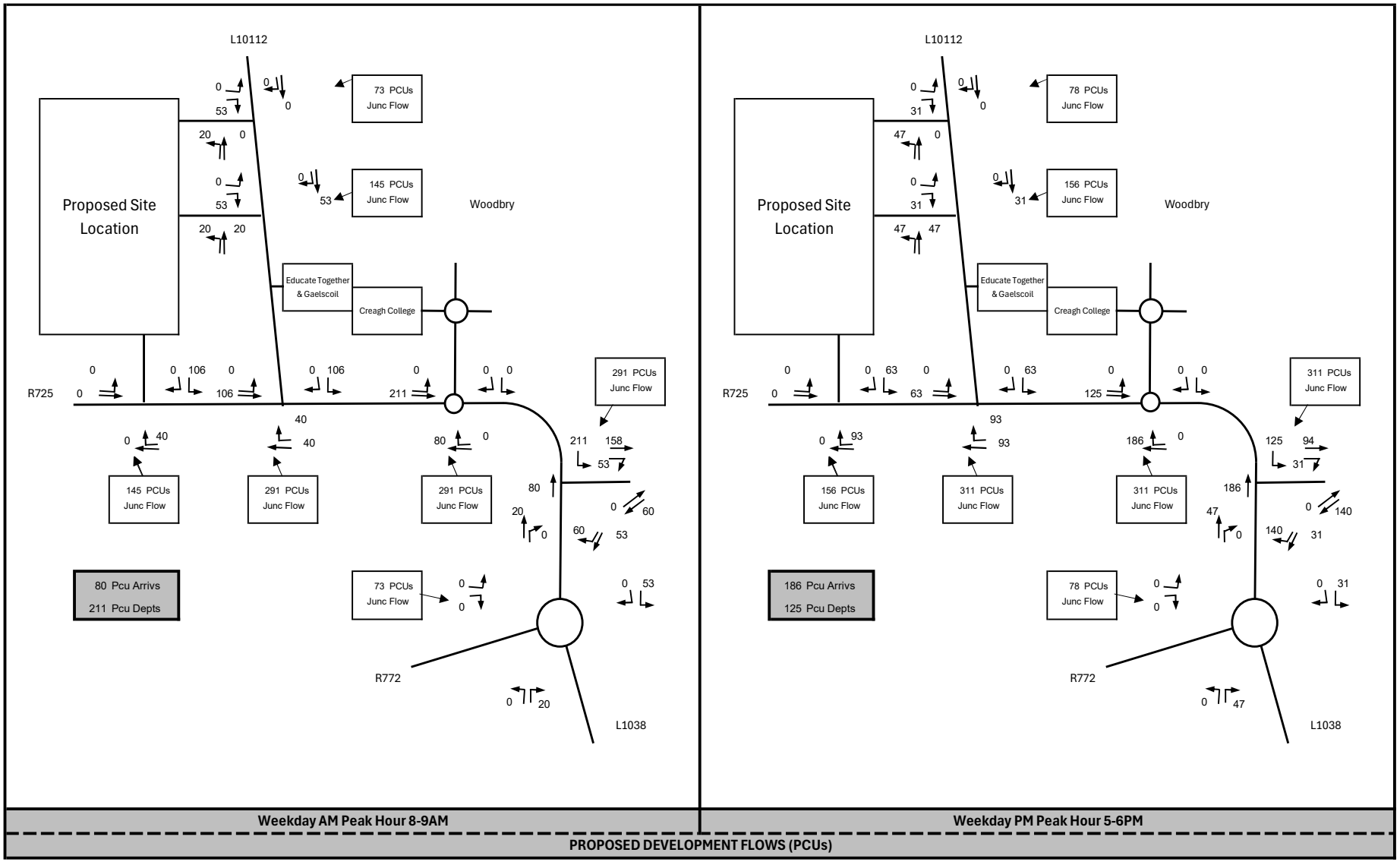

Weekday AM Peak Hour 8-9AM

Weekday PM Peak Hour 5-6PM

PROPOSED DEVELOPMENT FLOWS (PCUs)

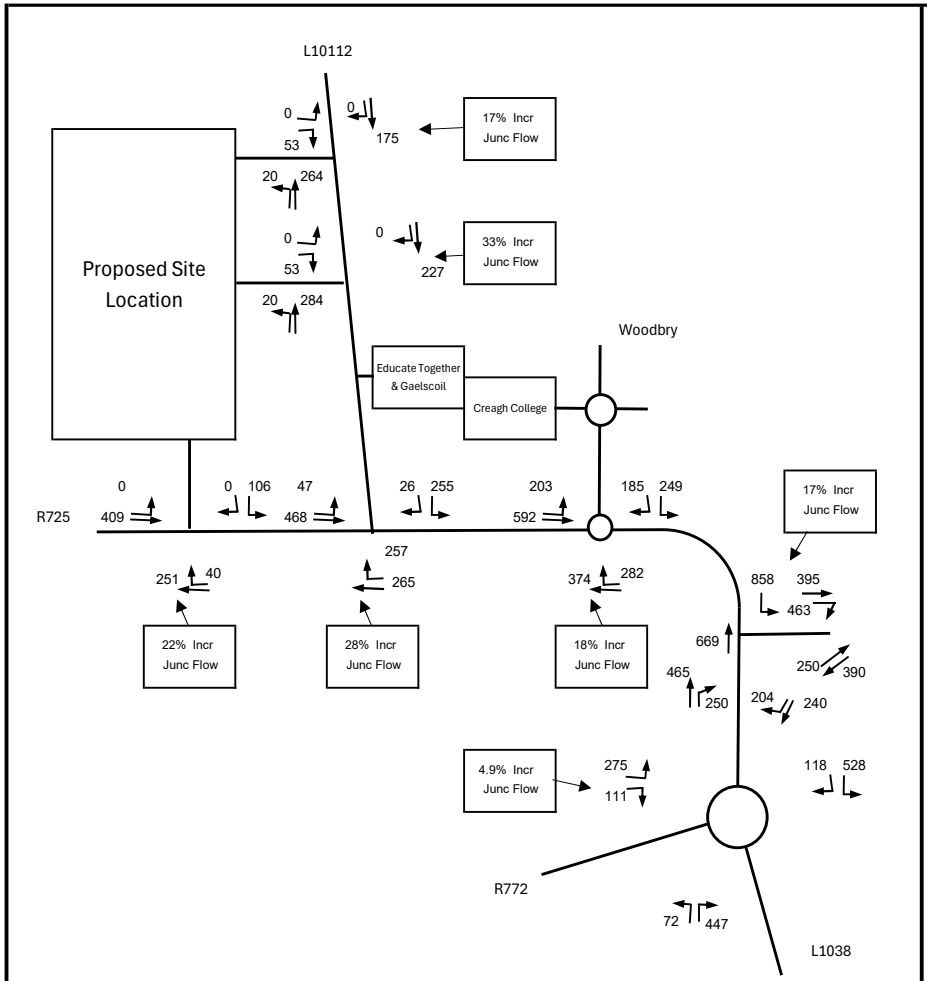

Weekday AM Peak Hour 8-9AM

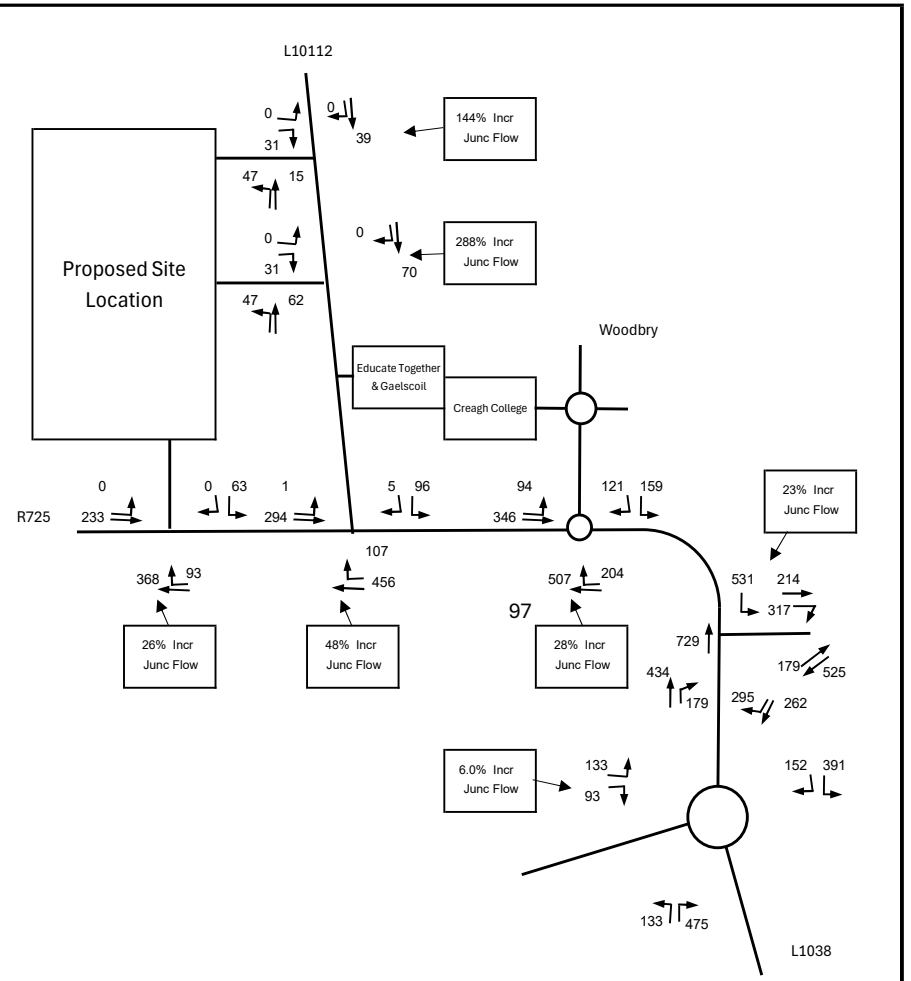

Weekday PM Peak Hour 5-6PM

SELECTED OPENING YEAR 2028 FLOWS WITH TII GROWTH APPLIED WITH PROPOSED DEVELOPMENT (PCUs)

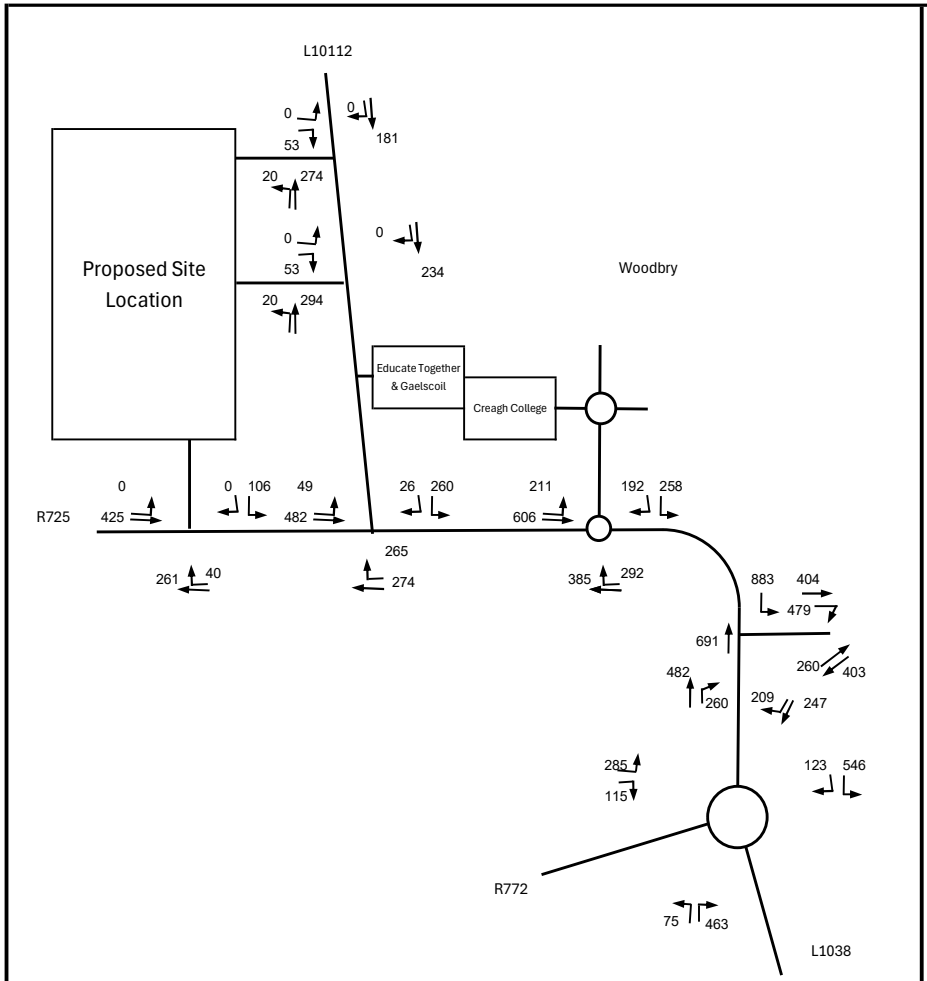

Weekday AM Peak Hour 8-9AM

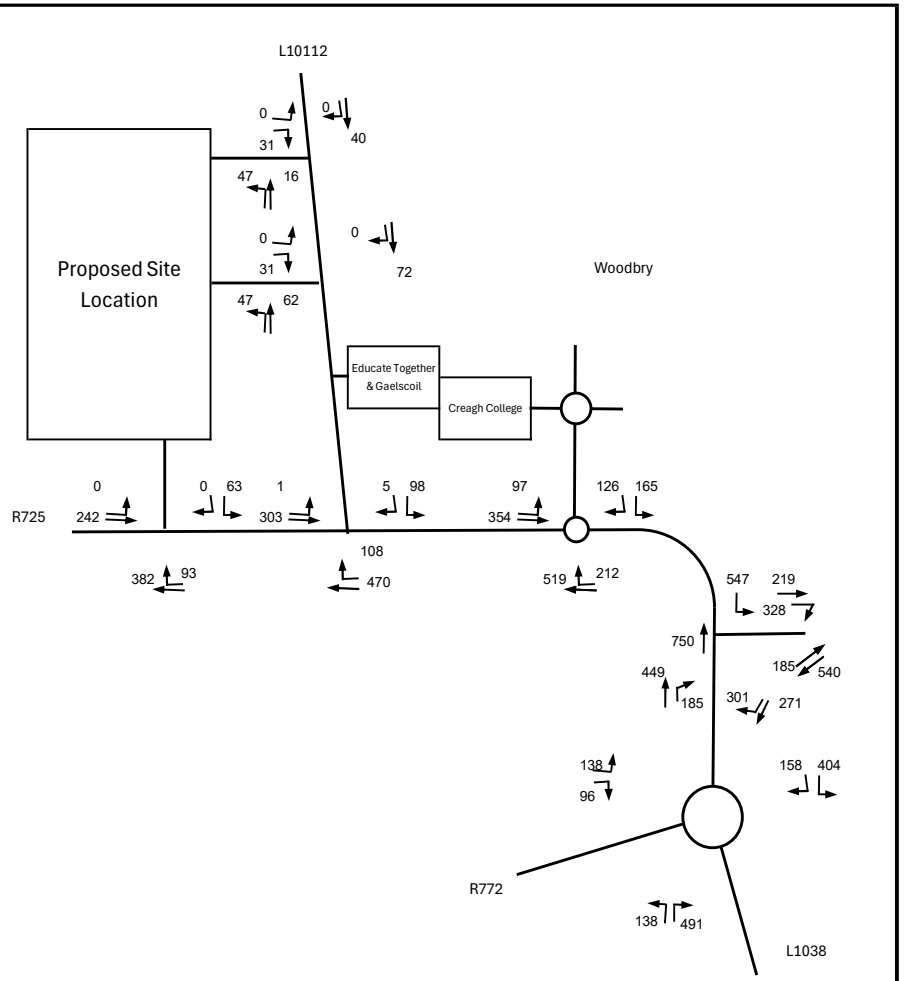

Weekday PM Peak Hour 5-6PM

SELECTED DESIGN YEAR 2043 FLOWS WITH TII GROWTH APPLIED WITH PROPOSED DEVELOPMENT (PCUs)

APPENDIX E

PiCADY Capacity Modelling
Proposed R725 Site Access Ghost Island Junction

Proposed R725 Site Access Ghost Island Junction
Capacity Assessment With Subject Development Open & Fully Occupied

WITH COMPLETED DEVELOPMENT TRAFFIC INCLUDED		
Modelled Scenario	Period Mean Max Q (PCUs)	Period Max RFC
2028 Opening Year AM Peak Hr 8-9	0.3	0.21
2028 Opening Year PM Peak Hr 5-6	0.2	0.17
2043 Design Year AM Peak Hr 8-9	0.3	0.21
2043 Design Year PM Peak Hr 5-6	0.2	0.17

All Results Above are WAY below the recommended RFC of 0.85 (100% Being Capacity) and therefore no problems whatsoever are anticipated at the Junction in terms of capacity or excessive vehicle Queues

NB - Any Small Changes to Selected Opening Year 2028 or Design Year 2043, or indeed significantly higher traffic volumes experienced, clearly from the positive results presented, will have no significant implications in terms of the conclusions of the Study

Junctions 10

PICADY 10 - Priority Intersection Module

Version: 10.0.4.1693
© Copyright TRL Software Limited, 2021

For sales and distribution information, program advice and maintenance, contact TRL Software:
+44 (0)1344 379777 software@trl.co.uk trlsoftware.com

The users of this computer program for the solution of an engineering problem are in no way relieved of their responsibility for the correctness of the solution

Filename: R725 Site Access Junction.j10
Path: C:\Users\BrianMc\OneDrive\OneDrive - NRB Consulting Engineers Ltd\Documents\2025\25-030 Gorey LRD\Calculations\Junction Analysis\E - R725 Site Access
Report generation date: 01/11/2025 17:52:29

»2028, AM
»2028, PM
»2043, AM
»2043, PM

Summary of junction performance

	AM						PM					
	Set ID	Queue (PCU)	Delay (s)	RFC	LOS	Network Residual Capacity	Set ID	Queue (PCU)	Delay (s)	RFC	LOS	Network Residual Capacity
	2028											
Stream B-AC	D1	0.3	8.05	0.21	A	160 %	D2	0.1	6.69	0.11	A	255 %
Stream C-B		0.1	6.92	0.08	A	[Stream B-AC]		0.2	7.13	0.17	A	[Stream C-B]
	2043											
Stream B-AC	D3	0.3	8.12	0.21	A	156 %	D4	0.1	6.72	0.11	A	250 %
Stream C-B		0.1	6.98	0.08	A	[Stream B-AC]		0.2	7.16	0.17	A	[Stream C-B]

Values shown are the highest values encountered over all time segments. Delay is the maximum value of average delay per arriving vehicle. Network Residual Capacity indicates the amount by which network flow could be increased before a user-definable threshold (see Analysis Options) is met.

File summary

File Description

Title	
Location	
Site number	
Date	01/11/2025
Version	
Status	(new file)
Identifier	
Client	
Jobnumber	
Enumerator	Office-LT\BrianMc
Description	

Units

Distance units	Speed units	Traffic units input	Traffic units results	Flow units	Average delay units	Total delay units	Rate of delay units
m	kph	PCU	PCU	perHour	s	-Min	perMin

Analysis Options

Calculate Queue Percentiles	Calculate residual capacity	Residual capacity criteria type	RFC Threshold	Average Delay threshold (s)	Queue threshold (PCU)
	✓	Delay	0.85	36.00	20.00

Demand Set Summary

ID	Scenario name	Time Period name	Traffic profile type	Start time (HH:mm)	Finish time (HH:mm)	Time segment length (min)
D1	2028	AM	ONE HOUR	07:45	09:15	15
D2	2028	PM	ONE HOUR	16:45	18:15	15
D3	2043	AM	ONE HOUR	07:45	09:15	15
D4	2043	PM	ONE HOUR	16:45	18:15	15

Analysis Set Details

ID	Network flow scaling factor (%)
A1	100.000

2028, AM

Data Errors and Warnings

No errors or warnings

Junction Network

Junctions

Junction	Name	Junction type	Arm A Direction	Arm B Direction	Arm C Direction	Use circulating lanes	Junction Delay (s)	Junction LOS
1	untitled	T-Junction	Two-way	Two-way	Two-way		1.40	A

Junction Network

Driving side	Lighting	Network residual capacity (%)	First arm reaching threshold	Network delay (s)	Network LOS
Left	Normal/unknown	160	Stream B-AC	1.40	A

Arms

Arms

Arm	Name	Description	Arm type
A	R725 (West)		Major
B	Site Access		Minor
C	R725 (East)		Major

Major Arm Geometry

Arm	Width of carriageway (m)	Has kerbed central reserve	Has right-turn storage	Width for right-turn storage (m)	Visibility for right turn (m)	Blocks?	Blocking queue (PCU)
C	9.00		✓	3.00	65.0		-

Geometries for Arm C are measured opposite Arm B. Geometries for Arm A (if relevant) are measured opposite Arm D.

Minor Arm Geometry

Arm	Minor arm type	Lane width (m)	Visibility to left (m)	Visibility to right (m)
B	One lane	3.00	65	65

Slope / Intercept / Capacity

Priority Intersection Slopes and Intercepts

Stream	Intercept (PCU/hr)	Slope for A-B	Slope for A-C	Slope for C-A	Slope for C-B
B-A	531	0.084	0.213	0.134	0.304
B-C	665	0.089	0.224	-	-
C-B	665	0.224	0.224	-	-

The slopes and intercepts shown above include custom intercept adjustments only.

Streams may be combined, in which case capacity will be adjusted.

Values are shown for the first time segment only; they may differ for subsequent time segments.

Traffic Demand

Demand Set Details

ID	Scenario name	Time Period name	Traffic profile type	Start time (HH:mm)	Finish time (HH:mm)	Time segment length (min)
D1	2028	AM	ONE HOUR	07:45	09:15	15

Vehicle mix source	PCU Factor for a HV (PCU)
HV Percentages	2.00

Demand overview (Traffic)

Arm	Linked arm	Use O-D data	Average Demand (PCU/hr)	Scaling Factor (%)
A		✓	409	100.000
B		✓	106	100.000
C		✓	291	100.000

Origin-Destination Data

Demand (PCU/hr)

		To		
		A	B	C
From	A	0	0	409
	B	0	0	106
	C	251	40	0

Vehicle Mix

Heavy Vehicle Percentages

		To		
		A	B	C
From	A	0	0	2
	B	0	0	0
	C	2	0	0

Results

Results Summary for whole modelled period

Stream	Max RFC	Max Delay (s)	Max Queue (PCU)	Max LOS
B-AC	0.21	8.05	0.3	A
C-A				
C-B	0.08	6.92	0.1	A
A-B				
A-C				

Main Results for each time segment

07:45 - 08:00

Stream	Total Demand (PCU/hr)	Capacity (PCU/hr)	RFC	Throughput (PCU/hr)	End queue (PCU)	Delay (s)	Unsignalised level of service
B-AC	80	596	0.134	79	0.2	6.956	A
C-A	189			189			
C-B	30	596	0.051	30	0.1	6.359	A
A-B	0			0			
A-C	308			308			

08:00 - 08:15

Stream	Total Demand (PCU/hr)	Capacity (PCU/hr)	RFC	Throughput (PCU/hr)	End queue (PCU)	Delay (s)	Unsignalised level of service
B-AC	95	583	0.164	95	0.2	7.385	A
C-A	226			226			
C-B	36	583	0.062	36	0.1	6.586	A
A-B	0			0			
A-C	368			368			

08:15 - 08:30

Stream	Total Demand (PCU/hr)	Capacity (PCU/hr)	RFC	Throughput (PCU/hr)	End queue (PCU)	Delay (s)	Unsignalised level of service
B-AC	117	564	0.207	116	0.3	8.038	A
C-A	276			276			
C-B	44	564	0.078	44	0.1	6.922	A
A-B	0			0			
A-C	450			450			

08:30 - 08:45

Stream	Total Demand (PCU/hr)	Capacity (PCU/hr)	RFC	Throughput (PCU/hr)	End queue (PCU)	Delay (s)	Unsignalised level of service
B-AC	117	564	0.207	117	0.3	8.048	A
C-A	276			276			
C-B	44	564	0.078	44	0.1	6.922	A
A-B	0			0			
A-C	450			450			

08:45 - 09:00

Stream	Total Demand (PCU/hr)	Capacity (PCU/hr)	RFC	Throughput (PCU/hr)	End queue (PCU)	Delay (s)	Unsignalised level of service
B-AC	95	583	0.164	96	0.2	7.398	A
C-A	226			226			
C-B	36	583	0.062	36	0.1	6.590	A
A-B	0			0			
A-C	368			368			

09:00 - 09:15

Stream	Total Demand (PCU/hr)	Capacity (PCU/hr)	RFC	Throughput (PCU/hr)	End queue (PCU)	Delay (s)	Unsignalised level of service
B-AC	80	596	0.134	80	0.2	6.979	A
C-A	189			189			
C-B	30	596	0.051	30	0.1	6.365	A
A-B	0			0			
A-C	308			308			

2028, PM

Data Errors and Warnings

No errors or warnings

Junction Network

Junctions

Junction	Name	Junction type	Arm A Direction	Arm B Direction	Arm C Direction	Use circulating lanes	Junction Delay (s)	Junction LOS
1	untitled	T-Junction	Two-way	Two-way	Two-way		1.43	A

Junction Network

Driving side	Lighting	Network residual capacity (%)	First arm reaching threshold	Network delay (s)	Network LOS
Left	Normal/unknown	255	Stream C-B	1.43	A

Traffic Demand

Demand Set Details

ID	Scenario name	Time Period name	Traffic profile type	Start time (HH:mm)	Finish time (HH:mm)	Time segment length (min)
D2	2028	PM	ONE HOUR	16:45	18:15	15

Vehicle mix source	PCU Factor for a HV (PCU)
HV Percentages	2.00

Demand overview (Traffic)

Arm	Linked arm	Use O-D data	Average Demand (PCU/hr)	Scaling Factor (%)
A		✓	233	100.000
B		✓	63	100.000
C		✓	461	100.000

Origin-Destination Data

Demand (PCU/hr)

		To		
		A	B	C
From	A	0	0	233
	B	0	0	63
	C	368	93	0

Vehicle Mix

Heavy Vehicle Percentages

		To		
		A	B	C
From	A	0	0	2
	B	0	0	0
	C	2	0	0

Results

Results Summary for whole modelled period

Stream	Max RFC	Max Delay (s)	Max Queue (PCU)	Max LOS
B-AC	0.11	6.69	0.1	A
C-A				
C-B	0.17	7.13	0.2	A
A-B				
A-C				

Main Results for each time segment

16:45 - 17:00

Stream	Total Demand (PCU/hr)	Capacity (PCU/hr)	RFC	Throughput (PCU/hr)	End queue (PCU)	Delay (s)	Unsignalised level of service
B-AC	47	626	0.076	47	0.1	6.221	A
C-A	277			277			
C-B	70	626	0.112	70	0.1	6.469	A
A-B	0			0			
A-C	175			175			

17:00 - 17:15

Stream	Total Demand (PCU/hr)	Capacity (PCU/hr)	RFC	Throughput (PCU/hr)	End queue (PCU)	Delay (s)	Unsignalised level of service
B-AC	57	618	0.092	57	0.1	6.412	A
C-A	331			331			
C-B	84	618	0.135	83	0.2	6.733	A
A-B	0			0			
A-C	209			209			

17:15 - 17:30

Stream	Total Demand (PCU/hr)	Capacity (PCU/hr)	RFC	Throughput (PCU/hr)	End queue (PCU)	Delay (s)	Unsignalised level of service
B-AC	69	607	0.114	69	0.1	6.687	A
C-A	405			405			
C-B	102	607	0.169	102	0.2	7.125	A
A-B	0			0			
A-C	257			257			

17:30 - 17:45

Stream	Total Demand (PCU/hr)	Capacity (PCU/hr)	RFC	Throughput (PCU/hr)	End queue (PCU)	Delay (s)	Unsignalised level of service
B-AC	69	607	0.114	69	0.1	6.690	A
C-A	405			405			
C-B	102	607	0.169	102	0.2	7.127	A
A-B	0			0			
A-C	257			257			

17:45 - 18:00

Stream	Total Demand (PCU/hr)	Capacity (PCU/hr)	RFC	Throughput (PCU/hr)	End queue (PCU)	Delay (s)	Unsignalised level of service
B-AC	57	618	0.092	57	0.1	6.417	A
C-A	331			331			
C-B	84	618	0.135	84	0.2	6.743	A
A-B	0			0			
A-C	209			209			

18:00 - 18:15

Stream	Total Demand (PCU/hr)	Capacity (PCU/hr)	RFC	Throughput (PCU/hr)	End queue (PCU)	Delay (s)	Unsignalised level of service
B-AC	47	626	0.076	48	0.1	6.227	A
C-A	277			277			
C-B	70	626	0.112	70	0.1	6.484	A
A-B	0			0			
A-C	175			175			

2043, AM

Data Errors and Warnings

No errors or warnings

Junction Network

Junctions

Junction	Name	Junction type	Arm A Direction	Arm B Direction	Arm C Direction	Use circulating lanes	Junction Delay (s)	Junction LOS
1	untitled	T-Junction	Two-way	Two-way	Two-way		1.37	A

Junction Network

Driving side	Lighting	Network residual capacity (%)	First arm reaching threshold	Network delay (s)	Network LOS
Left	Normal/unknown	156	Stream B-AC	1.37	A

Traffic Demand

Demand Set Details

ID	Scenario name	Time Period name	Traffic profile type	Start time (HH:mm)	Finish time (HH:mm)	Time segment length (min)
D3	2043	AM	ONE HOUR	07:45	09:15	15

Vehicle mix source	PCU Factor for a HV (PCU)
HV Percentages	2.00

Demand overview (Traffic)

Arm	Linked arm	Use O-D data	Average Demand (PCU/hr)	Scaling Factor (%)
A		✓	425	100.000
B		✓	106	100.000
C		✓	301	100.000

Origin-Destination Data

Demand (PCU/hr)

		To		
		A	B	C
From	A	0	0	425
	B	0	0	106
	C	261	40	0

Vehicle Mix

Heavy Vehicle Percentages

		To		
		A	B	C
From	A	0	0	2
	B	0	0	0
	C	2	0	0

Results

Results Summary for whole modelled period

Stream	Max RFC	Max Delay (s)	Max Queue (PCU)	Max LOS
B-AC	0.21	8.12	0.3	A
C-A				
C-B	0.08	6.98	0.1	A
A-B				
A-C				

Main Results for each time segment

07:45 - 08:00

Stream	Total Demand (PCU/hr)	Capacity (PCU/hr)	RFC	Throughput (PCU/hr)	End queue (PCU)	Delay (s)	Unsignalised level of service
B-AC	80	593	0.135	79	0.2	6.994	A
C-A	196			196			
C-B	30	593	0.051	30	0.1	6.390	A
A-B	0			0			
A-C	320			320			

08:00 - 08:15

Stream	Total Demand (PCU/hr)	Capacity (PCU/hr)	RFC	Throughput (PCU/hr)	End queue (PCU)	Delay (s)	Unsignalised level of service
B-AC	95	579	0.165	95	0.2	7.434	A
C-A	235			235			
C-B	36	579	0.062	36	0.1	6.625	A
A-B	0			0			
A-C	382			382			

08:15 - 08:30

Stream	Total Demand (PCU/hr)	Capacity (PCU/hr)	RFC	Throughput (PCU/hr)	End queue (PCU)	Delay (s)	Unsignalised level of service
B-AC	117	560	0.208	116	0.3	8.110	A
C-A	287			287			
C-B	44	560	0.079	44	0.1	6.975	A
A-B	0			0			
A-C	468			468			

08:30 - 08:45

Stream	Total Demand (PCU/hr)	Capacity (PCU/hr)	RFC	Throughput (PCU/hr)	End queue (PCU)	Delay (s)	Unsignalised level of service
B-AC	117	560	0.208	117	0.3	8.119	A
C-A	287			287			
C-B	44	560	0.079	44	0.1	6.975	A
A-B	0			0			
A-C	468			468			

08:45 - 09:00

Stream	Total Demand (PCU/hr)	Capacity (PCU/hr)	RFC	Throughput (PCU/hr)	End queue (PCU)	Delay (s)	Unsignalised level of service
B-AC	95	579	0.165	96	0.2	7.445	A
C-A	235			235			
C-B	36	579	0.062	36	0.1	6.629	A
A-B	0			0			
A-C	382			382			

09:00 - 09:15

Stream	Total Demand (PCU/hr)	Capacity (PCU/hr)	RFC	Throughput (PCU/hr)	End queue (PCU)	Delay (s)	Unsignalised level of service
B-AC	80	593	0.135	80	0.2	7.016	A
C-A	196			196			
C-B	30	593	0.051	30	0.1	6.396	A
A-B	0			0			
A-C	320			320			

2043, PM

Data Errors and Warnings

No errors or warnings

Junction Network

Junctions

Junction	Name	Junction type	Arm A Direction	Arm B Direction	Arm C Direction	Use circulating lanes	Junction Delay (s)	Junction LOS
1	untitled	T-Junction	Two-way	Two-way	Two-way		1.40	A

Junction Network

Driving side	Lighting	Network residual capacity (%)	First arm reaching threshold	Network delay (s)	Network LOS
Left	Normal/unknown	250	Stream C-B	1.40	A

Traffic Demand

Demand Set Details

ID	Scenario name	Time Period name	Traffic profile type	Start time (HH:mm)	Finish time (HH:mm)	Time segment length (min)
D4	2043	PM	ONE HOUR	16:45	18:15	15

Vehicle mix source	PCU Factor for a HV (PCU)
HV Percentages	2.00

Demand overview (Traffic)

Arm	Linked arm	Use O-D data	Average Demand (PCU/hr)	Scaling Factor (%)
A		✓	242	100.000
B		✓	63	100.000
C		✓	475	100.000

Origin-Destination Data

Demand (PCU/hr)

		To		
		A	B	C
From	A	0	0	242
	B	0	0	63
	C	382	93	0

Vehicle Mix

Heavy Vehicle Percentages

		To		
		A	B	C
From	A	0	0	2
	B	0	0	0
	C	2	0	0

Results

Results Summary for whole modelled period

Stream	Max RFC	Max Delay (s)	Max Queue (PCU)	Max LOS
B-AC	0.11	6.72	0.1	A
C-A				
C-B	0.17	7.16	0.2	A
A-B				
A-C				

Main Results for each time segment

16:45 - 17:00

Stream	Total Demand (PCU/hr)	Capacity (PCU/hr)	RFC	Throughput (PCU/hr)	End queue (PCU)	Delay (s)	Unsignalised level of service
B-AC	47	624	0.076	47	0.1	6.237	A
C-A	288			288			
C-B	70	624	0.112	70	0.1	6.486	A
A-B	0			0			
A-C	182			182			

17:00 - 17:15

Stream	Total Demand (PCU/hr)	Capacity (PCU/hr)	RFC	Throughput (PCU/hr)	End queue (PCU)	Delay (s)	Unsignalised level of service
B-AC	57	616	0.092	57	0.1	6.433	A
C-A	343			343			
C-B	84	616	0.136	83	0.2	6.756	A
A-B	0			0			
A-C	218			218			

17:15 - 17:30

Stream	Total Demand (PCU/hr)	Capacity (PCU/hr)	RFC	Throughput (PCU/hr)	End queue (PCU)	Delay (s)	Unsignalised level of service
B-AC	69	605	0.115	69	0.1	6.715	A
C-A	421			421			
C-B	102	605	0.169	102	0.2	7.156	A
A-B	0			0			
A-C	266			266			

17:30 - 17:45

Stream	Total Demand (PCU/hr)	Capacity (PCU/hr)	RFC	Throughput (PCU/hr)	End queue (PCU)	Delay (s)	Unsignalised level of service
B-AC	69	605	0.115	69	0.1	6.717	A
C-A	421			421			
C-B	102	605	0.169	102	0.2	7.159	A
A-B	0			0			
A-C	266			266			

17:45 - 18:00

Stream	Total Demand (PCU/hr)	Capacity (PCU/hr)	RFC	Throughput (PCU/hr)	End queue (PCU)	Delay (s)	Unsignalised level of service
B-AC	57	616	0.092	57	0.1	6.436	A
C-A	343			343			
C-B	84	616	0.136	84	0.2	6.766	A
A-B	0			0			
A-C	218			218			

18:00 - 18:15

Stream	Total Demand (PCU/hr)	Capacity (PCU/hr)	RFC	Throughput (PCU/hr)	End queue (PCU)	Delay (s)	Unsignalised level of service
B-AC	47	624	0.076	48	0.1	6.244	A
C-A	288			288			
C-B	70	624	0.112	70	0.1	6.499	A
A-B	0			0			
A-C	182			182			

APPENDIX F

PiCADY Capacity Modelling
Proposed L10112 Northern Site Access T-Junction

Proposed L10112 Northern Site Access T-Junction
Capacity Assessment With Subject Development Open & Fully Occupied

WITH COMPLETED DEVELOPMENT TRAFFIC INCLUDED		
Modelled Scenario	Period Mean Max Q (PCUs)	Period Max RFC
2028 Opening Year AM Peak Hr 8-9	0.2	0.14
2028 Opening Year PM Peak Hr 5-6	0.1	0.07
2043 Design Year AM Peak Hr 8-9	0.2	0.14
2043 Design Year PM Peak Hr 5-6	0.1	0.07

All Results Above are WAY below the recommended RFC of 0.85 (100% Being Capacity) and therefore no problems whatsoever are anticipated at the Junction in terms of capacity or excessive vehicle Queues

NB - Any Small Changes to Selected Opening Year 2028 or Design Year 2043, or indeed significantly higher traffic volumes experienced, clearly from the positive results presented, will have no significant implications in terms of the conclusions of the Study

Junctions 10

PICADY 10 - Priority Intersection Module

Version: 10.0.4.1693
© Copyright TRL Software Limited, 2021

For sales and distribution information, program advice and maintenance, contact TRL Software:
+44 (0)1344 379777 software@trl.co.uk trlsoftware.com

The users of this computer program for the solution of an engineering problem are in no way relieved of their responsibility for the correctness of the solution

Filename: L10112 Northern Site Access.j10
Path: C:\Users\BrianMc\OneDrive\OneDrive - NRB Consulting Engineers Ltd\Documents\2025\25-030 Gorey LRD\Calculations\Junction Analysis\F - L10112 Northern Site Access
Report generation date: 01/11/2025 18:14:53

»2028, AM
»2028, PM
»2043, AM
»2043, PM

Summary of junction performance

	AM						PM					
	Set ID	Queue (PCU)	Delay (s)	RFC	LOS	Network Residual Capacity	Set ID	Queue (PCU)	Delay (s)	RFC	LOS	Network Residual Capacity
	2028											
Stream B-AC	D1	0.2	9.73	0.14	A	167 % [Stream B-AC]	D2	0.1	7.48	0.07	A	770 % [Stream B-AC]
Stream C-AB		0.0	0.00	0.00	A			0.0	0.00	0.00	A	
	2043											
Stream B-AC	D3	0.2	9.83	0.14	A	161 % [Stream B-AC]	D4	0.1	7.49	0.07	A	762 % [Stream B-AC]
Stream C-AB		0.0	0.00	0.00	A			0.0	0.00	0.00	A	

Values shown are the highest values encountered over all time segments. Delay is the maximum value of average delay per arriving vehicle. Network Residual Capacity indicates the amount by which network flow could be increased before a user-definable threshold (see Analysis Options) is met.

File summary

File Description

Title	
Location	
Site number	
Date	01/11/2025
Version	
Status	(new file)
Identifier	
Client	
Jobnumber	
Enumerator	Office-LT\BrianMc
Description	

Units

Distance units	Speed units	Traffic units input	Traffic units results	Flow units	Average delay units	Total delay units	Rate of delay units
m	kph	PCU	PCU	perHour	s	-Min	perMin

Analysis Options

Calculate Queue Percentiles	Calculate residual capacity	Residual capacity criteria type	RFC Threshold	Average Delay threshold (s)	Queue threshold (PCU)
	✓	Delay	0.85	36.00	20.00

Demand Set Summary

ID	Scenario name	Time Period name	Traffic profile type	Start time (HH:mm)	Finish time (HH:mm)	Time segment length (min)
D1	2028	AM	ONE HOUR	07:45	09:15	15
D2	2028	PM	ONE HOUR	16:45	18:15	15
D3	2043	AM	ONE HOUR	07:45	09:15	15
D4	2043	PM	ONE HOUR	16:45	18:15	15

Analysis Set Details

ID	Network flow scaling factor (%)
A1	100.000

2028, AM

Data Errors and Warnings

No errors or warnings

Junction Network

Junctions

Junction	Name	Junction type	Arm A Direction	Arm B Direction	Arm C Direction	Use circulating lanes	Junction Delay (s)	Junction LOS
1	untitled	T-Junction	Two-way	Two-way	Two-way		1.01	A

Junction Network

Driving side	Lighting	Network residual capacity (%)	First arm reaching threshold	Network delay (s)	Network LOS
Left	Normal/unknown	167	Stream B-AC	1.01	A

Arms

Arms

Arm	Name	Description	Arm type
A	L10112 (South)		Major
B	Site Access		Minor
C	L10112 (South)		Major

Major Arm Geometry

Arm	Width of carriageway (m)	Has kerbed central reserve	Has right-turn storage	Visibility for right turn (m)	Blocks?	Blocking queue (PCU)
C	6.00			65.0	✓	0.00

Geometries for Arm C are measured opposite Arm B. Geometries for Arm A (if relevant) are measured opposite Arm D.

Minor Arm Geometry

Arm	Minor arm type	Lane width (m)	Visibility to left (m)	Visibility to right (m)
B	One lane	3.00	65	65

Slope / Intercept / Capacity

Priority Intersection Slopes and Intercepts

Stream	Intercept (PCU/hr)	Slope for A-B	Slope for A-C	Slope for C-A	Slope for C-B
B-A	531	0.097	0.244	0.154	0.349
B-C	665	0.102	0.258	-	-
C-B	612	0.237	0.237	-	-

The slopes and intercepts shown above include custom intercept adjustments only.

Streams may be combined, in which case capacity will be adjusted.

Values are shown for the first time segment only; they may differ for subsequent time segments.

Traffic Demand

Demand Set Details

ID	Scenario name	Time Period name	Traffic profile type	Start time (HH:mm)	Finish time (HH:mm)	Time segment length (min)
D1	2028	AM	ONE HOUR	07:45	09:15	15

Vehicle mix source	PCU Factor for a HV (PCU)
HV Percentages	2.00

Demand overview (Traffic)

Arm	Linked arm	Use O-D data	Average Demand (PCU/hr)	Scaling Factor (%)
A		✓	284	100.000
B		✓	53	100.000
C		✓	175	100.000

Origin-Destination Data

Demand (PCU/hr)

		To		
		A	B	C
From	A	0	20	264
	B	53	0	0
	C	175	0	0

Vehicle Mix

Heavy Vehicle Percentages

		To		
		A	B	C
From	A	0	0	2
	B	0	0	0
	C	2	0	0

Results

Results Summary for whole modelled period

Stream	Max RFC	Max Delay (s)	Max Queue (PCU)	Max LOS
B-AC	0.14	9.73	0.2	A
C-AB	0.00	0.00	0.0	A
C-A				
A-B				
A-C				

Main Results for each time segment

07:45 - 08:00

Stream	Total Demand (PCU/hr)	Capacity (PCU/hr)	RFC	Throughput (PCU/hr)	End queue (PCU)	Delay (s)	Unsignalised level of service
B-AC	40	461	0.087	40	0.1	8.539	A
C-AB	0	561	0.000	0	0.0	0.000	A
C-A	132			132			
A-B	15			15			
A-C	199			199			

08:00 - 08:15

Stream	Total Demand (PCU/hr)	Capacity (PCU/hr)	RFC	Throughput (PCU/hr)	End queue (PCU)	Delay (s)	Unsignalised level of service
B-AC	48	447	0.107	48	0.1	9.009	A
C-AB	0	551	0.000	0	0.0	0.000	A
C-A	157			157			
A-B	18			18			
A-C	237			237			

08:15 - 08:30

Stream	Total Demand (PCU/hr)	Capacity (PCU/hr)	RFC	Throughput (PCU/hr)	End queue (PCU)	Delay (s)	Unsignalised level of service
B-AC	58	428	0.136	58	0.2	9.725	A
C-AB	0	538	0.000	0	0.0	0.000	A
C-A	193			193			
A-B	22			22			
A-C	291			291			

08:30 - 08:45

Stream	Total Demand (PCU/hr)	Capacity (PCU/hr)	RFC	Throughput (PCU/hr)	End queue (PCU)	Delay (s)	Unsignalised level of service
B-AC	58	428	0.136	58	0.2	9.733	A
C-AB	0	538	0.000	0	0.0	0.000	A
C-A	193			193			
A-B	22			22			
A-C	291			291			

08:45 - 09:00

Stream	Total Demand (PCU/hr)	Capacity (PCU/hr)	RFC	Throughput (PCU/hr)	End queue (PCU)	Delay (s)	Unsignalised level of service
B-AC	48	447	0.107	48	0.1	9.019	A
C-AB	0	551	0.000	0	0.0	0.000	A
C-A	157			157			
A-B	18			18			
A-C	237			237			

09:00 - 09:15

Stream	Total Demand (PCU/hr)	Capacity (PCU/hr)	RFC	Throughput (PCU/hr)	End queue (PCU)	Delay (s)	Unsignalised level of service
B-AC	40	461	0.087	40	0.1	8.560	A
C-AB	0	561	0.000	0	0.0	0.000	A
C-A	132			132			
A-B	15			15			
A-C	199			199			

2028, PM

Data Errors and Warnings

No errors or warnings

Junction Network

Junctions

Junction	Name	Junction type	Arm A Direction	Arm B Direction	Arm C Direction	Use circulating lanes	Junction Delay (s)	Junction LOS
1	untitled	T-Junction	Two-way	Two-way	Two-way		1.76	A

Junction Network

Driving side	Lighting	Network residual capacity (%)	First arm reaching threshold	Network delay (s)	Network LOS
Left	Normal/unknown	770	Stream B-AC	1.76	A

Traffic Demand

Demand Set Details

ID	Scenario name	Time Period name	Traffic profile type	Start time (HH:mm)	Finish time (HH:mm)	Time segment length (min)
D2	2028	PM	ONE HOUR	16:45	18:15	15

Vehicle mix source	PCU Factor for a HV (PCU)
HV Percentages	2.00

Demand overview (Traffic)

Arm	Linked arm	Use O-D data	Average Demand (PCU/hr)	Scaling Factor (%)
A		✓	62	100.000
B		✓	31	100.000
C		✓	39	100.000

Origin-Destination Data

Demand (PCU/hr)

		To		
		A	B	C
From	A	0	47	15
	B	31	0	0
	C	39	0	0

Vehicle Mix

Heavy Vehicle Percentages

		To		
		A	B	C
From	A	0	0	2
	B	0	0	0
	C	2	0	0

Results

Results Summary for whole modelled period

Stream	Max RFC	Max Delay (s)	Max Queue (PCU)	Max LOS
B-AC	0.07	7.48	0.1	A
C-AB	0.00	0.00	0.0	A
C-A				
A-B				
A-C				

Main Results for each time segment

16:45 - 17:00

Stream	Total Demand (PCU/hr)	Capacity (PCU/hr)	RFC	Throughput (PCU/hr)	End queue (PCU)	Delay (s)	Unsignalised level of service
B-AC	23	520	0.045	23	0.0	7.240	A
C-AB	0	601	0.000	0	0.0	0.000	A
C-A	29			29			
A-B	35			35			
A-C	11			11			

17:00 - 17:15

Stream	Total Demand (PCU/hr)	Capacity (PCU/hr)	RFC	Throughput (PCU/hr)	End queue (PCU)	Delay (s)	Unsignalised level of service
B-AC	28	518	0.054	28	0.1	7.340	A
C-AB	0	598	0.000	0	0.0	0.000	A
C-A	35			35			
A-B	42			42			
A-C	13			13			

17:15 - 17:30

Stream	Total Demand (PCU/hr)	Capacity (PCU/hr)	RFC	Throughput (PCU/hr)	End queue (PCU)	Delay (s)	Unsignalised level of service
B-AC	34	515	0.066	34	0.1	7.479	A
C-AB	0	595	0.000	0	0.0	0.000	A
C-A	43			43			
A-B	52			52			
A-C	17			17			

17:30 - 17:45

Stream	Total Demand (PCU/hr)	Capacity (PCU/hr)	RFC	Throughput (PCU/hr)	End queue (PCU)	Delay (s)	Unsignalised level of service
B-AC	34	515	0.066	34	0.1	7.479	A
C-AB	0	595	0.000	0	0.0	0.000	A
C-A	43			43			
A-B	52			52			
A-C	17			17			

17:45 - 18:00

Stream	Total Demand (PCU/hr)	Capacity (PCU/hr)	RFC	Throughput (PCU/hr)	End queue (PCU)	Delay (s)	Unsignalised level of service
B-AC	28	518	0.054	28	0.1	7.344	A
C-AB	0	598	0.000	0	0.0	0.000	A
C-A	35			35			
A-B	42			42			
A-C	13			13			

18:00 - 18:15

Stream	Total Demand (PCU/hr)	Capacity (PCU/hr)	RFC	Throughput (PCU/hr)	End queue (PCU)	Delay (s)	Unsignalised level of service
B-AC	23	520	0.045	23	0.0	7.244	A
C-AB	0	601	0.000	0	0.0	0.000	A
C-A	29			29			
A-B	35			35			
A-C	11			11			

2043, AM

Data Errors and Warnings

No errors or warnings

Junction Network

Junctions

Junction	Name	Junction type	Arm A Direction	Arm B Direction	Arm C Direction	Use circulating lanes	Junction Delay (s)	Junction LOS
1	untitled	T-Junction	Two-way	Two-way	Two-way		0.99	A

Junction Network

Driving side	Lighting	Network residual capacity (%)	First arm reaching threshold	Network delay (s)	Network LOS
Left	Normal/unknown	161	Stream B-AC	0.99	A

Traffic Demand

Demand Set Details

ID	Scenario name	Time Period name	Traffic profile type	Start time (HH:mm)	Finish time (HH:mm)	Time segment length (min)
D3	2043	AM	ONE HOUR	07:45	09:15	15

Vehicle mix source	PCU Factor for a HV (PCU)
HV Percentages	2.00

Demand overview (Traffic)

Arm	Linked arm	Use O-D data	Average Demand (PCU/hr)	Scaling Factor (%)
A		✓	294	100.000
B		✓	53	100.000
C		✓	181	100.000

Origin-Destination Data

Demand (PCU/hr)

		To		
		A	B	C
From	A	0	20	274
	B	53	0	0
	C	181	0	0

Vehicle Mix

Heavy Vehicle Percentages

		To		
		A	B	C
From	A	0	0	2
	B	0	0	0
	C	2	0	0

Results

Results Summary for whole modelled period

Stream	Max RFC	Max Delay (s)	Max Queue (PCU)	Max LOS
B-AC	0.14	9.83	0.2	A
C-AB	0.00	0.00	0.0	A
C-A				
A-B				
A-C				

Main Results for each time segment

07:45 - 08:00

Stream	Total Demand (PCU/hr)	Capacity (PCU/hr)	RFC	Throughput (PCU/hr)	End queue (PCU)	Delay (s)	Unsignalised level of service
B-AC	40	458	0.087	40	0.1	8.591	A
C-AB	0	559	0.000	0	0.0	0.000	A
C-A	136			136			
A-B	15			15			
A-C	206			206			

08:00 - 08:15

Stream	Total Demand (PCU/hr)	Capacity (PCU/hr)	RFC	Throughput (PCU/hr)	End queue (PCU)	Delay (s)	Unsignalised level of service
B-AC	48	444	0.107	48	0.1	9.078	A
C-AB	0	549	0.000	0	0.0	0.000	A
C-A	163			163			
A-B	18			18			
A-C	246			246			

08:15 - 08:30

Stream	Total Demand (PCU/hr)	Capacity (PCU/hr)	RFC	Throughput (PCU/hr)	End queue (PCU)	Delay (s)	Unsignalised level of service
B-AC	58	424	0.137	58	0.2	9.824	A
C-AB	0	535	0.000	0	0.0	0.000	A
C-A	199			199			
A-B	22			22			
A-C	302			302			

08:30 - 08:45

Stream	Total Demand (PCU/hr)	Capacity (PCU/hr)	RFC	Throughput (PCU/hr)	End queue (PCU)	Delay (s)	Unsignalised level of service
B-AC	58	424	0.137	58	0.2	9.832	A
C-AB	0	535	0.000	0	0.0	0.000	A
C-A	199			199			
A-B	22			22			
A-C	302			302			

08:45 - 09:00

Stream	Total Demand (PCU/hr)	Capacity (PCU/hr)	RFC	Throughput (PCU/hr)	End queue (PCU)	Delay (s)	Unsignalised level of service
B-AC	48	444	0.107	48	0.1	9.090	A
C-AB	0	549	0.000	0	0.0	0.000	A
C-A	163			163			
A-B	18			18			
A-C	246			246			

09:00 - 09:15

Stream	Total Demand (PCU/hr)	Capacity (PCU/hr)	RFC	Throughput (PCU/hr)	End queue (PCU)	Delay (s)	Unsignalised level of service
B-AC	40	458	0.087	40	0.1	8.612	A
C-AB	0	559	0.000	0	0.0	0.000	A
C-A	136			136			
A-B	15			15			
A-C	206			206			

2043, PM

Data Errors and Warnings

No errors or warnings

Junction Network

Junctions

Junction	Name	Junction type	Arm A Direction	Arm B Direction	Arm C Direction	Use circulating lanes	Junction Delay (s)	Junction LOS
1	untitled	T-Junction	Two-way	Two-way	Two-way		1.73	A

Junction Network

Driving side	Lighting	Network residual capacity (%)	First arm reaching threshold	Network delay (s)	Network LOS
Left	Normal/unknown	762	Stream B-AC	1.73	A

Traffic Demand

Demand Set Details

ID	Scenario name	Time Period name	Traffic profile type	Start time (HH:mm)	Finish time (HH:mm)	Time segment length (min)
D4	2043	PM	ONE HOUR	16:45	18:15	15

Vehicle mix source	PCU Factor for a HV (PCU)
HV Percentages	2.00

Demand overview (Traffic)

Arm	Linked arm	Use O-D data	Average Demand (PCU/hr)	Scaling Factor (%)
A		✓	63	100.000
B		✓	31	100.000
C		✓	40	100.000

Origin-Destination Data

Demand (PCU/hr)

		To		
		A	B	C
From	A	0	47	16
	B	31	0	0
	C	40	0	0

Vehicle Mix

Heavy Vehicle Percentages

		To		
		A	B	C
From	A	0	0	2
	B	0	0	0
	C	2	0	0

Results

Results Summary for whole modelled period

Stream	Max RFC	Max Delay (s)	Max Queue (PCU)	Max LOS
B-AC	0.07	7.49	0.1	A
C-AB	0.00	0.00	0.0	A
C-A				
A-B				
A-C				

Main Results for each time segment

16:45 - 17:00

Stream	Total Demand (PCU/hr)	Capacity (PCU/hr)	RFC	Throughput (PCU/hr)	End queue (PCU)	Delay (s)	Unsignalised level of service
B-AC	23	520	0.045	23	0.0	7.244	A
C-AB	0	600	0.000	0	0.0	0.000	A
C-A	30			30			
A-B	35			35			
A-C	12			12			

17:00 - 17:15

Stream	Total Demand (PCU/hr)	Capacity (PCU/hr)	RFC	Throughput (PCU/hr)	End queue (PCU)	Delay (s)	Unsignalised level of service
B-AC	28	518	0.054	28	0.1	7.345	A
C-AB	0	598	0.000	0	0.0	0.000	A
C-A	36			36			
A-B	42			42			
A-C	14			14			

17:15 - 17:30

Stream	Total Demand (PCU/hr)	Capacity (PCU/hr)	RFC	Throughput (PCU/hr)	End queue (PCU)	Delay (s)	Unsignalised level of service
B-AC	34	515	0.066	34	0.1	7.486	A
C-AB	0	595	0.000	0	0.0	0.000	A
C-A	44			44			
A-B	52			52			
A-C	18			18			

17:30 - 17:45

Stream	Total Demand (PCU/hr)	Capacity (PCU/hr)	RFC	Throughput (PCU/hr)	End queue (PCU)	Delay (s)	Unsignalised level of service
B-AC	34	515	0.066	34	0.1	7.486	A
C-AB	0	595	0.000	0	0.0	0.000	A
C-A	44			44			
A-B	52			52			
A-C	18			18			

17:45 - 18:00

Stream	Total Demand (PCU/hr)	Capacity (PCU/hr)	RFC	Throughput (PCU/hr)	End queue (PCU)	Delay (s)	Unsignalised level of service
B-AC	28	518	0.054	28	0.1	7.347	A
C-AB	0	598	0.000	0	0.0	0.000	A
C-A	36			36			
A-B	42			42			
A-C	14			14			

18:00 - 18:15

Stream	Total Demand (PCU/hr)	Capacity (PCU/hr)	RFC	Throughput (PCU/hr)	End queue (PCU)	Delay (s)	Unsignalised level of service
B-AC	23	520	0.045	23	0.0	7.251	A
C-AB	0	600	0.000	0	0.0	0.000	A
C-A	30			30			
A-B	35			35			
A-C	12			12			

APPENDIX G

PiCADY Capacity Modelling
Proposed L10112 Southern Site Access T- Junction

Proposed L10112 Southern Site Access T- Junction
Capacity Assessment With Subject Development Open & Fully Occupied

WITH COMPLETED DEVELOPMENT TRAFFIC INCLUDED		
Modelled Scenario	Period Mean Max Q (PCUs)	Period Max RFC
2028 Opening Year AM Peak Hr 8-9	0.1	0.12
2028 Opening Year PM Peak Hr 5-6	0.1	0.07
2043 Design Year AM Peak Hr 8-9	0.1	0.12
2043 Design Year PM Peak Hr 5-6	0.1	0.07

All Results Above are WAY below the recommended RFC of 0.85 (100% Being Capacity) and therefore no problems whatsoever are anticipated at the Junction in terms of capacity or excessive vehicle Queues

NB - Any Small Changes to Selected Opening Year 2028 or Design Year 2043, or indeed significantly higher traffic volumes experienced, clearly from the positive results presented, will have no significant implications in terms of the conclusions of the Study

Junctions 10

PICADY 10 - Priority Intersection Module

Version: 10.0.4.1693
© Copyright TRL Software Limited, 2021

For sales and distribution information, program advice and maintenance, contact TRL Software:
+44 (0)1344 379777 software@trl.co.uk trlsoftware.com

The users of this computer program for the solution of an engineering problem are in no way relieved of their responsibility for the correctness of the solution

Filename: L10112 Southern Site Access.j10
Path: C:\Users\BrianMc\OneDrive\OneDrive - NRB Consulting Engineers Ltd\Documents\2025\25-030 Gorey LRD\Calculations\Junction Analysis\G - L10112 Southern Site Access
Report generation date: 01/11/2025 18:19:04

»2028, AM
»2028, PM
»2043, AM
»2043, PM

Summary of junction performance

	AM						PM					
	Set ID	Queue (PCU)	Delay (s)	RFC	LOS	Network Residual Capacity	Set ID	Queue (PCU)	Delay (s)	RFC	LOS	Network Residual Capacity
	2028											
Stream B-AC	D1	0.2	10.12	0.14	B	146 % [Stream B-AC]	D2	0.1	7.77	0.07	A	538 % [Stream B-AC]
Stream C-AB		0.0	0.00	0.00	A			0.0	0.00	0.00	A	
	2043											
Stream B-AC	D3	0.2	10.23	0.14	B	140 % [Stream B-AC]	D4	0.1	7.77	0.07	A	535 % [Stream B-AC]
Stream C-AB		0.0	0.00	0.00	A			0.0	0.00	0.00	A	

Values shown are the highest values encountered over all time segments. Delay is the maximum value of average delay per arriving vehicle. Network Residual Capacity indicates the amount by which network flow could be increased before a user-definable threshold (see Analysis Options) is met.

File summary

File Description

Title	
Location	
Site number	
Date	01/11/2025
Version	
Status	(new file)
Identifier	
Client	
Jobnumber	
Enumerator	Office-LT\BrianMc
Description	

Units

Distance units	Speed units	Traffic units input	Traffic units results	Flow units	Average delay units	Total delay units	Rate of delay units
m	kph	PCU	PCU	perHour	s	-Min	perMin

Analysis Options

Calculate Queue Percentiles	Calculate residual capacity	Residual capacity criteria type	RFC Threshold	Average Delay threshold (s)	Queue threshold (PCU)
	✓	Delay	0.85	36.00	20.00

Demand Set Summary

ID	Scenario name	Time Period name	Traffic profile type	Start time (HH:mm)	Finish time (HH:mm)	Time segment length (min)
D1	2028	AM	ONE HOUR	07:45	09:15	15
D2	2028	PM	ONE HOUR	16:45	18:15	15
D3	2043	AM	ONE HOUR	07:45	09:15	15
D4	2043	PM	ONE HOUR	16:45	18:15	15

Analysis Set Details

ID	Network flow scaling factor (%)
A1	100.000

2028, AM

Data Errors and Warnings

No errors or warnings

Junction Network

Junctions

Junction	Name	Junction type	Arm A Direction	Arm B Direction	Arm C Direction	Use circulating lanes	Junction Delay (s)	Junction LOS
1	untitled	T-Junction	Two-way	Two-way	Two-way		0.92	A

Junction Network

Driving side	Lighting	Network residual capacity (%)	First arm reaching threshold	Network delay (s)	Network LOS
Left	Normal/unknown	146	Stream B-AC	0.92	A

Arms

Arms

Arm	Name	Description	Arm type
A	L10112 (South)		Major
B	Site Access		Minor
C	L10112 (South)		Major

Major Arm Geometry

Arm	Width of carriageway (m)	Has kerbed central reserve	Has right-turn storage	Visibility for right turn (m)	Blocks?	Blocking queue (PCU)
C	6.00			65.0	✓	0.00

Geometries for Arm C are measured opposite Arm B. Geometries for Arm A (if relevant) are measured opposite Arm D.

Minor Arm Geometry

Arm	Minor arm type	Lane width (m)	Visibility to left (m)	Visibility to right (m)
B	One lane	3.00	65	65

Slope / Intercept / Capacity

Priority Intersection Slopes and Intercepts

Stream	Intercept (PCU/hr)	Slope for A-B	Slope for A-C	Slope for C-A	Slope for C-B
B-A	531	0.097	0.244	0.154	0.349
B-C	665	0.102	0.258	-	-
C-B	612	0.237	0.237	-	-

The slopes and intercepts shown above include custom intercept adjustments only.

Streams may be combined, in which case capacity will be adjusted.

Values are shown for the first time segment only; they may differ for subsequent time segments.

Traffic Demand

Demand Set Details

ID	Scenario name	Time Period name	Traffic profile type	Start time (HH:mm)	Finish time (HH:mm)	Time segment length (min)
D1	2028	AM	ONE HOUR	07:45	09:15	15

Vehicle mix source	PCU Factor for a HV (PCU)
HV Percentages	2.00

Demand overview (Traffic)

Arm	Linked arm	Use O-D data	Average Demand (PCU/hr)	Scaling Factor (%)
A		✓	304	100.000
B		✓	53	100.000
C		✓	227	100.000

Origin-Destination Data

Demand (PCU/hr)

		To		
		A	B	C
From	A	0	20	284
	B	53	0	0
	C	227	0	0

Vehicle Mix

Heavy Vehicle Percentages

		To		
		A	B	C
From	A	0	0	2
	B	0	0	0
	C	2	0	0

Results

Results Summary for whole modelled period

Stream	Max RFC	Max Delay (s)	Max Queue (PCU)	Max LOS
B-AC	0.14	10.12	0.2	B
C-AB	0.00	0.00	0.0	A
C-A				
A-B				
A-C				

Main Results for each time segment

07:45 - 08:00

Stream	Total Demand (PCU/hr)	Capacity (PCU/hr)	RFC	Throughput (PCU/hr)	End queue (PCU)	Delay (s)	Unsignalised level of service
B-AC	40	451	0.088	40	0.1	8.741	A
C-AB	0	557	0.000	0	0.0	0.000	A
C-A	171			171			
A-B	15			15			
A-C	214			214			

08:00 - 08:15

Stream	Total Demand (PCU/hr)	Capacity (PCU/hr)	RFC	Throughput (PCU/hr)	End queue (PCU)	Delay (s)	Unsignalised level of service
B-AC	48	435	0.109	48	0.1	9.278	A
C-AB	0	547	0.000	0	0.0	0.000	A
C-A	204			204			
A-B	18			18			
A-C	255			255			

08:15 - 08:30

Stream	Total Demand (PCU/hr)	Capacity (PCU/hr)	RFC	Throughput (PCU/hr)	End queue (PCU)	Delay (s)	Unsignalised level of service
B-AC	58	414	0.141	58	0.2	10.113	B
C-AB	0	532	0.000	0	0.0	0.000	A
C-A	250			250			
A-B	22			22			
A-C	313			313			

08:30 - 08:45

Stream	Total Demand (PCU/hr)	Capacity (PCU/hr)	RFC	Throughput (PCU/hr)	End queue (PCU)	Delay (s)	Unsignalised level of service
B-AC	58	414	0.141	58	0.2	10.121	B
C-AB	0	532	0.000	0	0.0	0.000	A
C-A	250			250			
A-B	22			22			
A-C	313			313			

08:45 - 09:00

Stream	Total Demand (PCU/hr)	Capacity (PCU/hr)	RFC	Throughput (PCU/hr)	End queue (PCU)	Delay (s)	Unsignalised level of service
B-AC	48	435	0.109	48	0.1	9.291	A
C-AB	0	547	0.000	0	0.0	0.000	A
C-A	204			204			
A-B	18			18			
A-C	255			255			

09:00 - 09:15

Stream	Total Demand (PCU/hr)	Capacity (PCU/hr)	RFC	Throughput (PCU/hr)	End queue (PCU)	Delay (s)	Unsignalised level of service
B-AC	40	451	0.088	40	0.1	8.761	A
C-AB	0	557	0.000	0	0.0	0.000	A
C-A	171			171			
A-B	15			15			
A-C	214			214			

2028, PM

Data Errors and Warnings

No errors or warnings

Junction Network

Junctions

Junction	Name	Junction type	Arm A Direction	Arm B Direction	Arm C Direction	Use circulating lanes	Junction Delay (s)	Junction LOS
1	untitled	T-Junction	Two-way	Two-way	Two-way		1.15	A

Junction Network

Driving side	Lighting	Network residual capacity (%)	First arm reaching threshold	Network delay (s)	Network LOS
Left	Normal/unknown	538	Stream B-AC	1.15	A

Traffic Demand

Demand Set Details

ID	Scenario name	Time Period name	Traffic profile type	Start time (HH:mm)	Finish time (HH:mm)	Time segment length (min)
D2	2028	PM	ONE HOUR	16:45	18:15	15

Vehicle mix source	PCU Factor for a HV (PCU)
HV Percentages	2.00

Demand overview (Traffic)

Arm	Linked arm	Use O-D data	Average Demand (PCU/hr)	Scaling Factor (%)
A		✓	109	100.000
B		✓	31	100.000
C		✓	70	100.000

Origin-Destination Data

Demand (PCU/hr)

		To		
		A	B	C
From	A	0	47	62
	B	31	0	0
	C	70	0	0

Vehicle Mix

Heavy Vehicle Percentages

		To		
		A	B	C
From	A	0	0	2
	B	0	0	0
	C	2	0	0

Results

Results Summary for whole modelled period

Stream	Max RFC	Max Delay (s)	Max Queue (PCU)	Max LOS
B-AC	0.07	7.77	0.1	A
C-AB	0.00	0.00	0.0	A
C-A				
A-B				
A-C				

Main Results for each time segment

16:45 - 17:00

Stream	Total Demand (PCU/hr)	Capacity (PCU/hr)	RFC	Throughput (PCU/hr)	End queue (PCU)	Delay (s)	Unsignalised level of service
B-AC	23	508	0.046	23	0.0	7.424	A
C-AB	0	592	0.000	0	0.0	0.000	A
C-A	53			53			
A-B	35			35			
A-C	47			47			

17:00 - 17:15

Stream	Total Demand (PCU/hr)	Capacity (PCU/hr)	RFC	Throughput (PCU/hr)	End queue (PCU)	Delay (s)	Unsignalised level of service
B-AC	28	504	0.055	28	0.1	7.565	A
C-AB	0	588	0.000	0	0.0	0.000	A
C-A	63			63			
A-B	42			42			
A-C	56			56			

17:15 - 17:30

Stream	Total Demand (PCU/hr)	Capacity (PCU/hr)	RFC	Throughput (PCU/hr)	End queue (PCU)	Delay (s)	Unsignalised level of service
B-AC	34	497	0.069	34	0.1	7.767	A
C-AB	0	583	0.000	0	0.0	0.000	A
C-A	77			77			
A-B	52			52			
A-C	68			68			

17:30 - 17:45

Stream	Total Demand (PCU/hr)	Capacity (PCU/hr)	RFC	Throughput (PCU/hr)	End queue (PCU)	Delay (s)	Unsignalised level of service
B-AC	34	497	0.069	34	0.1	7.769	A
C-AB	0	583	0.000	0	0.0	0.000	A
C-A	77			77			
A-B	52			52			
A-C	68			68			

17:45 - 18:00

Stream	Total Demand (PCU/hr)	Capacity (PCU/hr)	RFC	Throughput (PCU/hr)	End queue (PCU)	Delay (s)	Unsignalised level of service
B-AC	28	504	0.055	28	0.1	7.567	A
C-AB	0	588	0.000	0	0.0	0.000	A
C-A	63			63			
A-B	42			42			
A-C	56			56			

18:00 - 18:15

Stream	Total Demand (PCU/hr)	Capacity (PCU/hr)	RFC	Throughput (PCU/hr)	End queue (PCU)	Delay (s)	Unsignalised level of service
B-AC	23	508	0.046	23	0.0	7.429	A
C-AB	0	592	0.000	0	0.0	0.000	A
C-A	53			53			
A-B	35			35			
A-C	47			47			

2043, AM

Data Errors and Warnings

No errors or warnings

Junction Network

Junctions

Junction	Name	Junction type	Arm A Direction	Arm B Direction	Arm C Direction	Use circulating lanes	Junction Delay (s)	Junction LOS
1	untitled	T-Junction	Two-way	Two-way	Two-way		0.90	A

Junction Network

Driving side	Lighting	Network residual capacity (%)	First arm reaching threshold	Network delay (s)	Network LOS
Left	Normal/unknown	140	Stream B-AC	0.90	A

Traffic Demand

Demand Set Details

ID	Scenario name	Time Period name	Traffic profile type	Start time (HH:mm)	Finish time (HH:mm)	Time segment length (min)
D3	2043	AM	ONE HOUR	07:45	09:15	15

Vehicle mix source	PCU Factor for a HV (PCU)
HV Percentages	2.00

Demand overview (Traffic)

Arm	Linked arm	Use O-D data	Average Demand (PCU/hr)	Scaling Factor (%)
A		✓	314	100.000
B		✓	53	100.000
C		✓	234	100.000

Origin-Destination Data

Demand (PCU/hr)

		To		
		A	B	C
From	A	0	20	294
	B	53	0	0
	C	234	0	0

Vehicle Mix

Heavy Vehicle Percentages

		To		
		A	B	C
From	A	0	0	2
	B	0	0	0
	C	2	0	0

Results

Results Summary for whole modelled period

Stream	Max RFC	Max Delay (s)	Max Queue (PCU)	Max LOS
B-AC	0.14	10.23	0.2	B
C-AB	0.00	0.00	0.0	A
C-A				
A-B				
A-C				

Main Results for each time segment

07:45 - 08:00

Stream	Total Demand (PCU/hr)	Capacity (PCU/hr)	RFC	Throughput (PCU/hr)	End queue (PCU)	Delay (s)	Unsignalised level of service
B-AC	40	448	0.089	40	0.1	8.797	A
C-AB	0	556	0.000	0	0.0	0.000	A
C-A	176			176			
A-B	15			15			
A-C	221			221			

08:00 - 08:15

Stream	Total Demand (PCU/hr)	Capacity (PCU/hr)	RFC	Throughput (PCU/hr)	End queue (PCU)	Delay (s)	Unsignalised level of service
B-AC	48	432	0.110	48	0.1	9.354	A
C-AB	0	545	0.000	0	0.0	0.000	A
C-A	210			210			
A-B	18			18			
A-C	264			264			

08:15 - 08:30

Stream	Total Demand (PCU/hr)	Capacity (PCU/hr)	RFC	Throughput (PCU/hr)	End queue (PCU)	Delay (s)	Unsignalised level of service
B-AC	58	410	0.142	58	0.2	10.225	B
C-AB	0	530	0.000	0	0.0	0.000	A
C-A	258			258			
A-B	22			22			
A-C	324			324			

08:30 - 08:45

Stream	Total Demand (PCU/hr)	Capacity (PCU/hr)	RFC	Throughput (PCU/hr)	End queue (PCU)	Delay (s)	Unsignalised level of service
B-AC	58	410	0.142	58	0.2	10.233	B
C-AB	0	530	0.000	0	0.0	0.000	A
C-A	258			258			
A-B	22			22			
A-C	324			324			

08:45 - 09:00

Stream	Total Demand (PCU/hr)	Capacity (PCU/hr)	RFC	Throughput (PCU/hr)	End queue (PCU)	Delay (s)	Unsignalised level of service
B-AC	48	432	0.110	48	0.1	9.366	A
C-AB	0	545	0.000	0	0.0	0.000	A
C-A	210			210			
A-B	18			18			
A-C	264			264			

09:00 - 09:15

Stream	Total Demand (PCU/hr)	Capacity (PCU/hr)	RFC	Throughput (PCU/hr)	End queue (PCU)	Delay (s)	Unsignalised level of service
B-AC	40	448	0.089	40	0.1	8.818	A
C-AB	0	556	0.000	0	0.0	0.000	A
C-A	176			176			
A-B	15			15			
A-C	221			221			

2043, PM

Data Errors and Warnings

No errors or warnings

Junction Network

Junctions

Junction	Name	Junction type	Arm A Direction	Arm B Direction	Arm C Direction	Use circulating lanes	Junction Delay (s)	Junction LOS
1	untitled	T-Junction	Two-way	Two-way	Two-way		1.14	A

Junction Network

Driving side	Lighting	Network residual capacity (%)	First arm reaching threshold	Network delay (s)	Network LOS
Left	Normal/unknown	535	Stream B-AC	1.14	A

Traffic Demand

Demand Set Details

ID	Scenario name	Time Period name	Traffic profile type	Start time (HH:mm)	Finish time (HH:mm)	Time segment length (min)
D4	2043	PM	ONE HOUR	16:45	18:15	15

Vehicle mix source	PCU Factor for a HV (PCU)
HV Percentages	2.00

Demand overview (Traffic)

Arm	Linked arm	Use O-D data	Average Demand (PCU/hr)	Scaling Factor (%)
A		✓	109	100.000
B		✓	31	100.000
C		✓	72	100.000

Origin-Destination Data

Demand (PCU/hr)

		To		
		A	B	C
From	A	0	47	62
	B	31	0	0
	C	72	0	0

Vehicle Mix

Heavy Vehicle Percentages

		To		
		A	B	C
From	A	0	0	2
	B	0	0	0
	C	2	0	0

Results

Results Summary for whole modelled period

Stream	Max RFC	Max Delay (s)	Max Queue (PCU)	Max LOS
B-AC	0.07	7.77	0.1	A
C-AB	0.00	0.00	0.0	A
C-A				
A-B				
A-C				

Main Results for each time segment

16:45 - 17:00

Stream	Total Demand (PCU/hr)	Capacity (PCU/hr)	RFC	Throughput (PCU/hr)	End queue (PCU)	Delay (s)	Unsignalised level of service
B-AC	23	508	0.046	23	0.0	7.427	A
C-AB	0	592	0.000	0	0.0	0.000	A
C-A	54			54			
A-B	35			35			
A-C	47			47			

17:00 - 17:15

Stream	Total Demand (PCU/hr)	Capacity (PCU/hr)	RFC	Throughput (PCU/hr)	End queue (PCU)	Delay (s)	Unsignalised level of service
B-AC	28	503	0.055	28	0.1	7.570	A
C-AB	0	588	0.000	0	0.0	0.000	A
C-A	65			65			
A-B	42			42			
A-C	56			56			

17:15 - 17:30

Stream	Total Demand (PCU/hr)	Capacity (PCU/hr)	RFC	Throughput (PCU/hr)	End queue (PCU)	Delay (s)	Unsignalised level of service
B-AC	34	497	0.069	34	0.1	7.773	A
C-AB	0	583	0.000	0	0.0	0.000	A
C-A	79			79			
A-B	52			52			
A-C	68			68			

17:30 - 17:45

Stream	Total Demand (PCU/hr)	Capacity (PCU/hr)	RFC	Throughput (PCU/hr)	End queue (PCU)	Delay (s)	Unsignalised level of service
B-AC	34	497	0.069	34	0.1	7.775	A
C-AB	0	583	0.000	0	0.0	0.000	A
C-A	79			79			
A-B	52			52			
A-C	68			68			

17:45 - 18:00

Stream	Total Demand (PCU/hr)	Capacity (PCU/hr)	RFC	Throughput (PCU/hr)	End queue (PCU)	Delay (s)	Unsignalised level of service
B-AC	28	503	0.055	28	0.1	7.575	A
C-AB	0	588	0.000	0	0.0	0.000	A
C-A	65			65			
A-B	42			42			
A-C	56			56			

18:00 - 18:15

Stream	Total Demand (PCU/hr)	Capacity (PCU/hr)	RFC	Throughput (PCU/hr)	End queue (PCU)	Delay (s)	Unsignalised level of service
B-AC	23	508	0.046	23	0.0	7.430	A
C-AB	0	592	0.000	0	0.0	0.000	A
C-A	54			54			
A-B	35			35			
A-C	47			47			

APPENDIX H

PiCADY Capacity Modelling
Existing R725 / L10112 T- Junction

Existing R725 / L10112 T- Junction
Capacity Assessment With Subject Development Open & Fully Occupied

WITH COMPLETED DEVELOPMENT TRAFFIC INCLUDED		
Modelled Scenario	Period Mean Max Q (PCUs)	Period Max RFC
2028 Opening Year AM Peak Hr 8-9	3.2	0.71
2028 Opening Year PM Peak Hr 5-6	0.8	0.31
2043 Design Year AM Peak Hr 8-9	3.8	0.75
2043 Design Year PM Peak Hr 5-6	0.8	0.32

All Results Above are below the recommended RFC of 0.85 (100% Being Capacity) and therefore no problems whatsoever are anticipated at the Junction in terms of capacity or excessive vehicle Queues

NB - Any Small Changes to Selected Opening Year 2028 or Design Year 2043, or indeed significantly higher traffic volumes experienced, clearly from the positive results presented, will have no significant implications in terms of the conclusions of the Study

Junctions 10

PICADY 10 - Priority Intersection Module

Version: 10.0.4.1693
© Copyright TRL Software Limited, 2021

For sales and distribution information, program advice and maintenance, contact TRL Software:
+44 (0)1344 379777 software@trl.co.uk trlsoftware.com

The users of this computer program for the solution of an engineering problem are in no way relieved of their responsibility for the correctness of the solution

Filename: R725 - L10112 Junction.j10
Path: C:\Users\BrianMc\OneDrive\OneDrive - NRB Consulting Engineers Ltd\Documents\2025\25-030 Gorey LRD\Calculations\Junction Analysis\H - Existing R725 - L10112
Report generation date: 01/11/2025 19:35:52

»2028, AM
»2028, PM
»2043, AM
»2043, PM

Summary of junction performance

	AM						PM					
	Set ID	Queue (PCU)	Delay (s)	RFC	LOS	Network Residual Capacity	Set ID	Queue (PCU)	Delay (s)	RFC	LOS	Network Residual Capacity
	2028											
Stream B-AC	D1	1.8	21.14	0.65	C	12 % [Stream C-AB]	D2	0.2	8.01	0.20	A	77 % [Stream C-AB]
Stream C-AB		3.2	18.52	0.71	C			0.8	5.94	0.31	A	
	2043											
Stream B-AC	D3	1.9	22.57	0.67	C	9 % [Stream C-AB]	D4	0.3	8.10	0.20	A	73 % [Stream C-AB]
Stream C-AB		3.8	20.95	0.75	C			0.8	5.95	0.32	A	

Values shown are the highest values encountered over all time segments. Delay is the maximum value of average delay per arriving vehicle. Network Residual Capacity indicates the amount by which network flow could be increased before a user-definable threshold (see Analysis Options) is met.

File summary

File Description

Title	
Location	
Site number	
Date	01/11/2025
Version	
Status	(new file)
Identifier	
Client	
Jobnumber	
Enumerator	Office-LT\BrianMc
Description	

Units

Distance units	Speed units	Traffic units input	Traffic units results	Flow units	Average delay units	Total delay units	Rate of delay units
m	kph	PCU	PCU	perHour	s	-Min	perMin

Analysis Options

Calculate Queue Percentiles	Calculate residual capacity	Residual capacity criteria type	RFC Threshold	Average Delay threshold (s)	Queue threshold (PCU)
	✓	Delay	0.85	36.00	20.00

Demand Set Summary

ID	Scenario name	Time Period name	Traffic profile type	Start time (HH:mm)	Finish time (HH:mm)	Time segment length (min)
D1	2028	AM	ONE HOUR	07:45	09:15	15
D2	2028	PM	ONE HOUR	16:45	18:15	15
D3	2043	AM	ONE HOUR	07:45	09:15	15
D4	2043	PM	ONE HOUR	16:45	18:15	15

Analysis Set Details

ID	Network flow scaling factor (%)
A1	100.000

2028, AM

Data Errors and Warnings

No errors or warnings

Junction Network

Junctions

Junction	Name	Junction type	Arm A Direction	Arm B Direction	Arm C Direction	Use circulating lanes	Junction Delay (s)	Junction LOS
1	untitled	T-Junction	Two-way	Two-way	Two-way		10.29	B

Junction Network

Driving side	Lighting	Network residual capacity (%)	First arm reaching threshold	Network delay (s)	Network LOS
Left	Normal/unknown	12	Stream C-AB	10.29	B

Arms

Arms

Arm	Name	Description	Arm type
A	R725 (West)		Major
B	L10112		Minor
C	R725 (East)		Major

Major Arm Geometry

Arm	Width of carriageway (m)	Has kerbed central reserve	Has right-turn storage	Visibility for right turn (m)	Blocks?	Blocking queue (PCU)
C	6.00			65.0	✓	0.00

Geometries for Arm C are measured opposite Arm B. Geometries for Arm A (if relevant) are measured opposite Arm D.

Minor Arm Geometry

Arm	Minor arm type	Lane width (m)	Visibility to left (m)	Visibility to right (m)
B	One lane	3.00	65	65

Slope / Intercept / Capacity

Priority Intersection Slopes and Intercepts

Stream	Intercept (PCU/hr)	Slope for A-B	Slope for A-C	Slope for C-A	Slope for C-B
B-A	531	0.097	0.244	0.154	0.349
B-C	665	0.102	0.258	-	-
C-B	612	0.237	0.237	-	-

The slopes and intercepts shown above include custom intercept adjustments only.

Streams may be combined, in which case capacity will be adjusted.

Values are shown for the first time segment only; they may differ for subsequent time segments.

Traffic Demand

Demand Set Details

ID	Scenario name	Time Period name	Traffic profile type	Start time (HH:mm)	Finish time (HH:mm)	Time segment length (min)
D1	2028	AM	ONE HOUR	07:45	09:15	15

Vehicle mix source	PCU Factor for a HV (PCU)
HV Percentages	2.00

Demand overview (Traffic)

Arm	Linked arm	Use O-D data	Average Demand (PCU/hr)	Scaling Factor (%)
A		✓	515	100.000
B		✓	281	100.000
C		✓	522	100.000

Origin-Destination Data

Demand (PCU/hr)

		To		
		A	B	C
From	A	0	47	468
	B	26	0	255
	C	265	257	0

Vehicle Mix

Heavy Vehicle Percentages

		To		
		A	B	C
From	A	0	0	2
	B	0	0	0
	C	2	0	0

Results

Results Summary for whole modelled period

Stream	Max RFC	Max Delay (s)	Max Queue (PCU)	Max LOS
B-AC	0.65	21.14	1.8	C
C-AB	0.71	18.52	3.2	C
C-A				
A-B				
A-C				

Main Results for each time segment

07:45 - 08:00

Stream	Total Demand (PCU/hr)	Capacity (PCU/hr)	RFC	Throughput (PCU/hr)	End queue (PCU)	Delay (s)	Unsignalised level of service
B-AC	212	538	0.394	209	0.6	10.876	B
C-AB	277	662	0.419	273	0.9	9.280	A
C-A	116			116			
A-B	35			35			
A-C	352			352			

08:00 - 08:15

Stream	Total Demand (PCU/hr)	Capacity (PCU/hr)	RFC	Throughput (PCU/hr)	End queue (PCU)	Delay (s)	Unsignalised level of service
B-AC	253	514	0.492	251	0.9	13.651	B
C-AB	359	674	0.532	357	1.4	11.410	B
C-A	110			110			
A-B	42			42			
A-C	421			421			

08:15 - 08:30

Stream	Total Demand (PCU/hr)	Capacity (PCU/hr)	RFC	Throughput (PCU/hr)	End queue (PCU)	Delay (s)	Unsignalised level of service
B-AC	309	479	0.645	306	1.7	20.417	C
C-AB	492	693	0.710	486	3.1	17.426	C
C-A	82			82			
A-B	52			52			
A-C	515			515			

08:30 - 08:45

Stream	Total Demand (PCU/hr)	Capacity (PCU/hr)	RFC	Throughput (PCU/hr)	End queue (PCU)	Delay (s)	Unsignalised level of service
B-AC	309	479	0.646	309	1.8	21.140	C
C-AB	495	696	0.712	495	3.2	18.520	C
C-A	79			79			
A-B	52			52			
A-C	515			515			

08:45 - 09:00

Stream	Total Demand (PCU/hr)	Capacity (PCU/hr)	RFC	Throughput (PCU/hr)	End queue (PCU)	Delay (s)	Unsignalised level of service
B-AC	253	513	0.492	256	1.0	14.139	B
C-AB	362	678	0.534	369	1.6	12.106	B
C-A	107			107			
A-B	42			42			
A-C	421			421			

09:00 - 09:15

Stream	Total Demand (PCU/hr)	Capacity (PCU/hr)	RFC	Throughput (PCU/hr)	End queue (PCU)	Delay (s)	Unsignalised level of service
B-AC	212	537	0.394	213	0.7	11.149	B
C-AB	279	663	0.420	281	1.0	9.593	A
C-A	114			114			
A-B	35			35			
A-C	352			352			

2028, PM

Data Errors and Warnings

No errors or warnings

Junction Network

Junctions

Junction	Name	Junction type	Arm A Direction	Arm B Direction	Arm C Direction	Use circulating lanes	Junction Delay (s)	Junction LOS
1	untitled	T-Junction	Two-way	Two-way	Two-way		2.21	A

Junction Network

Driving side	Lighting	Network residual capacity (%)	First arm reaching threshold	Network delay (s)	Network LOS
Left	Normal/unknown	77	Stream C-AB	2.21	A

Traffic Demand

Demand Set Details

ID	Scenario name	Time Period name	Traffic profile type	Start time (HH:mm)	Finish time (HH:mm)	Time segment length (min)
D2	2028	PM	ONE HOUR	16:45	18:15	15

Vehicle mix source	PCU Factor for a HV (PCU)
HV Percentages	2.00

Demand overview (Traffic)

Arm	Linked arm	Use O-D data	Average Demand (PCU/hr)	Scaling Factor (%)
A		✓	295	100.000
B		✓	101	100.000
C		✓	563	100.000

Origin-Destination Data

Demand (PCU/hr)

		To		
		A	B	C
From	A	0	1	294
	B	5	0	96
	C	456	107	0

Vehicle Mix

Heavy Vehicle Percentages

		To		
		A	B	C
From	A	0	0	2
	B	0	0	0
	C	2	0	0

Results

Results Summary for whole modelled period

Stream	Max RFC	Max Delay (s)	Max Queue (PCU)	Max LOS
B-AC	0.20	8.01	0.2	A
C-AB	0.31	5.94	0.8	A
C-A				
A-B				
A-C				

Main Results for each time segment

16:45 - 17:00

Stream	Total Demand (PCU/hr)	Capacity (PCU/hr)	RFC	Throughput (PCU/hr)	End queue (PCU)	Delay (s)	Unsignalised level of service
B-AC	76	592	0.128	75	0.1	6.961	A
C-AB	142	796	0.178	140	0.4	5.538	A
C-A	282			282			
A-B	0.75			0.75			
A-C	221			221			

17:00 - 17:15

Stream	Total Demand (PCU/hr)	Capacity (PCU/hr)	RFC	Throughput (PCU/hr)	End queue (PCU)	Delay (s)	Unsignalised level of service
B-AC	91	579	0.157	91	0.2	7.369	A
C-AB	190	834	0.228	189	0.5	5.645	A
C-A	316			316			
A-B	0.90			0.90			
A-C	264			264			

17:15 - 17:30

Stream	Total Demand (PCU/hr)	Capacity (PCU/hr)	RFC	Throughput (PCU/hr)	End queue (PCU)	Delay (s)	Unsignalised level of service
B-AC	111	561	0.198	111	0.2	8.001	A
C-AB	273	888	0.307	272	0.8	5.914	A
C-A	347			347			
A-B	1			1			
A-C	324			324			

17:30 - 17:45

Stream	Total Demand (PCU/hr)	Capacity (PCU/hr)	RFC	Throughput (PCU/hr)	End queue (PCU)	Delay (s)	Unsignalised level of service
B-AC	111	561	0.198	111	0.2	8.010	A
C-AB	273	889	0.307	273	0.8	5.941	A
C-A	347			347			
A-B	1			1			
A-C	324			324			

17:45 - 18:00

Stream	Total Demand (PCU/hr)	Capacity (PCU/hr)	RFC	Throughput (PCU/hr)	End queue (PCU)	Delay (s)	Unsignalised level of service
B-AC	91	579	0.157	91	0.2	7.380	A
C-AB	191	835	0.228	192	0.5	5.682	A
C-A	315			315			
A-B	0.90			0.90			
A-C	264			264			

18:00 - 18:15

Stream	Total Demand (PCU/hr)	Capacity (PCU/hr)	RFC	Throughput (PCU/hr)	End queue (PCU)	Delay (s)	Unsignalised level of service
B-AC	76	592	0.128	76	0.1	6.983	A
C-AB	143	796	0.179	143	0.4	5.579	A
C-A	281			281			
A-B	0.75			0.75			
A-C	221			221			

2043, AM

Data Errors and Warnings

No errors or warnings

Junction Network

Junctions

Junction	Name	Junction type	Arm A Direction	Arm B Direction	Arm C Direction	Use circulating lanes	Junction Delay (s)	Junction LOS
1	untitled	T-Junction	Two-way	Two-way	Two-way		11.44	B

Junction Network

Driving side	Lighting	Network residual capacity (%)	First arm reaching threshold	Network delay (s)	Network LOS
Left	Normal/unknown	9	Stream C-AB	11.44	B

Traffic Demand

Demand Set Details

ID	Scenario name	Time Period name	Traffic profile type	Start time (HH:mm)	Finish time (HH:mm)	Time segment length (min)
D3	2043	AM	ONE HOUR	07:45	09:15	15

Vehicle mix source	PCU Factor for a HV (PCU)
HV Percentages	2.00

Demand overview (Traffic)

Arm	Linked arm	Use O-D data	Average Demand (PCU/hr)	Scaling Factor (%)
A		✓	531	100.000
B		✓	286	100.000
C		✓	539	100.000

Origin-Destination Data

Demand (PCU/hr)

		To		
		A	B	C
From	A	0	49	482
	B	26	0	260
	C	274	265	0

Vehicle Mix

Heavy Vehicle Percentages

		To		
		A	B	C
From	A	0	0	2
	B	0	0	0
	C	2	0	0

Results

Results Summary for whole modelled period

Stream	Max RFC	Max Delay (s)	Max Queue (PCU)	Max LOS
B-AC	0.67	22.57	1.9	C
C-AB	0.75	20.95	3.8	C
C-A				
A-B				
A-C				

Main Results for each time segment

07:45 - 08:00

Stream	Total Demand (PCU/hr)	Capacity (PCU/hr)	RFC	Throughput (PCU/hr)	End queue (PCU)	Delay (s)	Unsignalised level of service
B-AC	215	534	0.403	213	0.7	11.101	B
C-AB	289	664	0.436	286	1.0	9.520	A
C-A	116			116			
A-B	37			37			
A-C	363			363			

08:00 - 08:15

Stream	Total Demand (PCU/hr)	Capacity (PCU/hr)	RFC	Throughput (PCU/hr)	End queue (PCU)	Delay (s)	Unsignalised level of service
B-AC	257	510	0.504	256	1.0	14.091	B
C-AB	376	677	0.555	374	1.6	11.939	B
C-A	108			108			
A-B	44			44			
A-C	433			433			

08:15 - 08:30

Stream	Total Demand (PCU/hr)	Capacity (PCU/hr)	RFC	Throughput (PCU/hr)	End queue (PCU)	Delay (s)	Unsignalised level of service
B-AC	315	474	0.664	311	1.9	21.660	C
C-AB	519	697	0.744	511	3.6	19.321	C
C-A	75			75			
A-B	54			54			
A-C	531			531			

08:30 - 08:45

Stream	Total Demand (PCU/hr)	Capacity (PCU/hr)	RFC	Throughput (PCU/hr)	End queue (PCU)	Delay (s)	Unsignalised level of service
B-AC	315	473	0.665	315	1.9	22.566	C
C-AB	522	700	0.746	522	3.8	20.954	C
C-A	71			71			
A-B	54			54			
A-C	531			531			

08:45 - 09:00

Stream	Total Demand (PCU/hr)	Capacity (PCU/hr)	RFC	Throughput (PCU/hr)	End queue (PCU)	Delay (s)	Unsignalised level of service
B-AC	257	509	0.505	261	1.1	14.676	B
C-AB	380	681	0.558	388	1.7	12.876	B
C-A	104			104			
A-B	44			44			
A-C	433			433			

09:00 - 09:15

Stream	Total Demand (PCU/hr)	Capacity (PCU/hr)	RFC	Throughput (PCU/hr)	End queue (PCU)	Delay (s)	Unsignalised level of service
B-AC	215	534	0.403	217	0.7	11.400	B
C-AB	292	666	0.438	294	1.0	9.888	A
C-A	114			114			
A-B	37			37			
A-C	363			363			

2043, PM

Data Errors and Warnings

No errors or warnings

Junction Network

Junctions

Junction	Name	Junction type	Arm A Direction	Arm B Direction	Arm C Direction	Use circulating lanes	Junction Delay (s)	Junction LOS
1	untitled	T-Junction	Two-way	Two-way	Two-way		2.22	A

Junction Network

Driving side	Lighting	Network residual capacity (%)	First arm reaching threshold	Network delay (s)	Network LOS
Left	Normal/unknown	73	Stream C-AB	2.22	A

Traffic Demand

Demand Set Details

ID	Scenario name	Time Period name	Traffic profile type	Start time (HH:mm)	Finish time (HH:mm)	Time segment length (min)
D4	2043	PM	ONE HOUR	16:45	18:15	15

Vehicle mix source	PCU Factor for a HV (PCU)
HV Percentages	2.00

Demand overview (Traffic)

Arm	Linked arm	Use O-D data	Average Demand (PCU/hr)	Scaling Factor (%)
A		✓	304	100.000
B		✓	103	100.000
C		✓	578	100.000

Origin-Destination Data

Demand (PCU/hr)

		To		
		A	B	C
From	A	0	1	303
	B	5	0	98
	C	470	108	0

Vehicle Mix

Heavy Vehicle Percentages

		To		
		A	B	C
From	A	0	0	2
	B	0	0	0
	C	2	0	0

Results

Results Summary for whole modelled period

Stream	Max RFC	Max Delay (s)	Max Queue (PCU)	Max LOS
B-AC	0.20	8.10	0.3	A
C-AB	0.32	5.95	0.8	A
C-A				
A-B				
A-C				

Main Results for each time segment

16:45 - 17:00

Stream	Total Demand (PCU/hr)	Capacity (PCU/hr)	RFC	Throughput (PCU/hr)	End queue (PCU)	Delay (s)	Unsignalised level of service
B-AC	78	590	0.131	77	0.1	7.004	A
C-AB	146	802	0.182	144	0.4	5.521	A
C-A	290			290			
A-B	0.75			0.75			
A-C	228			228			

17:00 - 17:15

Stream	Total Demand (PCU/hr)	Capacity (PCU/hr)	RFC	Throughput (PCU/hr)	End queue (PCU)	Delay (s)	Unsignalised level of service
B-AC	93	577	0.160	92	0.2	7.428	A
C-AB	196	841	0.233	195	0.5	5.634	A
C-A	324			324			
A-B	0.90			0.90			
A-C	272			272			

17:15 - 17:30

Stream	Total Demand (PCU/hr)	Capacity (PCU/hr)	RFC	Throughput (PCU/hr)	End queue (PCU)	Delay (s)	Unsignalised level of service
B-AC	113	558	0.203	113	0.3	8.088	A
C-AB	283	897	0.315	281	0.8	5.921	A
C-A	354			354			
A-B	1			1			
A-C	334			334			

17:30 - 17:45

Stream	Total Demand (PCU/hr)	Capacity (PCU/hr)	RFC	Throughput (PCU/hr)	End queue (PCU)	Delay (s)	Unsignalised level of service
B-AC	113	558	0.203	113	0.3	8.096	A
C-AB	283	898	0.315	283	0.8	5.952	A
C-A	353			353			
A-B	1			1			
A-C	334			334			

17:45 - 18:00

Stream	Total Demand (PCU/hr)	Capacity (PCU/hr)	RFC	Throughput (PCU/hr)	End queue (PCU)	Delay (s)	Unsignalised level of service
B-AC	93	577	0.160	93	0.2	7.439	A
C-AB	197	842	0.233	198	0.5	5.674	A
C-A	323			323			
A-B	0.90			0.90			
A-C	272			272			

18:00 - 18:15

Stream	Total Demand (PCU/hr)	Capacity (PCU/hr)	RFC	Throughput (PCU/hr)	End queue (PCU)	Delay (s)	Unsignalised level of service
B-AC	78	590	0.131	78	0.2	7.026	A
C-AB	146	802	0.183	147	0.4	5.563	A
C-A	289			289			
A-B	0.75			0.75			
A-C	228			228			

APPENDIX I

ARCADY Capacity Modelling
Existing R725 / Woodbury Mini-Roundabout Junction

Existing R725 / Woodbury Mini-Roundabout Junction
Capacity Assessment With Subject Development Open & Fully Occupied

WITH COMPLETED DEVELOPMENT TRAFFIC INCLUDED		
Modelled Scenario	Period Mean Max Q (PCUs)	Period Max RFC
2028 Opening Year AM Peak Hr 8-9	5.0	0.84
2028 Opening Year PM Peak Hr 5-6	2.6	0.73
2043 Design Year AM Peak Hr 8-9	6.1	0.87
2043 Design Year PM Peak Hr 5-6	2.9	0.75

The Existing R725 / Woodbury, Mini-Roundabout Junction is approaching capacity but within acceptable operational limits, and therefore no problems whatsoever are anticipated at the Junction in terms of capacity or excessive vehicle Queues

NB - Any Small Changes to Selected Opening Year 2028 or Design Year 2043, or indeed significantly higher traffic volumes experienced, clearly from the positive results presented, will have no significant implications in terms of the conclusions of the Study

Junctions 10

ARCADY 10 - Roundabout Module

Version: 10.0.4.1693
© Copyright TRL Software Limited, 2021

For sales and distribution information, program advice and maintenance, contact TRL Software:
+44 (0)1344 379777 software@trl.co.uk trlsoftware.com

The users of this computer program for the solution of an engineering problem are in no way relieved of their responsibility for the correctness of the solution

Filename: Existing R725 - Woodbury Roundabout.j10
Path: C:\Users\BrianMc\OneDrive\OneDrive - NRB Consulting Engineers Ltd\Documents\2025\25-030 Gorey LRD\Calculations\Junction Analysis\I - Existing R725 - Woodbury Rdb
Report generation date: 02/11/2025 16:40:04

»2028, AM
»2028, PM
»2043, AM
»2043, PM

Summary of junction performance

	AM						PM					
	Set ID	Queue (PCU)	Delay (s)	RFC	LOS	Network Residual Capacity	Set ID	Queue (PCU)	Delay (s)	RFC	LOS	Network Residual Capacity
	2028											
Arm 1	D1	5.0	21.46	0.84	C	7 %	D2	0.8	5.96	0.44	A	24 %
Arm 2		2.4	18.36	0.71	C			0.6	6.61	0.36	A	
Arm 3		2.3	11.68	0.70	B	[Arm 1]		2.6	12.12	0.73	B	[Arm 3]
	2043											
Arm 1	D3	6.1	25.89	0.87	D	4 %	D4	0.8	6.14	0.45	A	20 %
Arm 2		2.8	21.27	0.75	C			0.6	6.83	0.38	A	
Arm 3		2.6	12.82	0.72	B	[Arm 1]		2.9	13.43	0.75	B	[Arm 3]

Values shown are the highest values encountered over all time segments. Delay is the maximum value of average delay per arriving vehicle. Network Residual Capacity indicates the amount by which network flow could be increased before a user-definable threshold (see Analysis Options) is met.

File summary

File Description

Title	
Location	
Site number	
Date	02/11/2025
Version	
Status	(new file)
Identifier	
Client	
Jobnumber	
Enumerator	Office-LT\BrianMc
Description	

Units

Distance units	Speed units	Traffic units input	Traffic units results	Flow units	Average delay units	Total delay units	Rate of delay units
m	kph	PCU	PCU	perHour	s	-Min	perMin

Analysis Options

Mini-roundabout model	Calculate Queue Percentiles	Calculate residual capacity	Residual capacity criteria type	RFC Threshold	Average Delay threshold (s)	Queue threshold (PCU)
JUNCTIONS 9		✓	Delay	0.85	36.00	20.00

Demand Set Summary

ID	Scenario name	Time Period name	Traffic profile type	Start time (HH:mm)	Finish time (HH:mm)	Time segment length (min)
D1	2028	AM	ONE HOUR	07:45	09:15	15
D2	2028	PM	ONE HOUR	16:45	18:15	15
D3	2043	AM	ONE HOUR	07:45	09:15	15
D4	2043	PM	ONE HOUR	16:45	18:15	15

Analysis Set Details

ID	Network flow scaling factor (%)
A1	100.000

2028, AM

Data Errors and Warnings

No errors or warnings

Junction Network

Junctions

Junction	Name	Junction type	Use circulating lanes	Arm order	Junction Delay (s)	Junction LOS
1	untitled	Mini-roundabout		1, 2, 3	17.34	C

Junction Network

Driving side	Lighting	Road surface	In London	Network residual capacity (%)	First arm reaching threshold	Network delay (s)	Network LOS
Left	Normal/unknown	Normal/unknown		7	Arm 1	17.34	C

Arms

Arms

Arm	Name	Description
1	R725 (West)	
2	Woodbury	
3	R725 (East)	

Mini Roundabout Geometry

Arm	Approach road half-width (m)	Minimum approach road half-width (m)	Entry width (m)	Effective flare length (m)	Distance to next arm (m)	Entry corner kerb line distance (m)	Gradient over 50m (%)	Kerbed central island
1	3.75	3.75	5.00	8.0	5.00	5.00	0.0	
2	3.75	3.75	6.00	10.0	5.00	5.00	0.0	
3	3.75	3.75	4.00	4.0	15.00	15.00	0.0	

Slope / Intercept / Capacity

Roundabout Slope and Intercept used in model

Arm	Final slope	Final intercept (PCU/hr)
1	0.650	1243
2	0.668	1108
3	0.651	1166

The slope and intercept shown above include any corrections and adjustments.

Traffic Demand

Demand Set Details

ID	Scenario name	Time Period name	Traffic profile type	Start time (HH:mm)	Finish time (HH:mm)	Time segment length (min)
D1	2028	AM	ONE HOUR	07:45	09:15	15

Vehicle mix source	PCU Factor for a HV (PCU)
HV Percentages	2.00

Demand overview (Traffic)

Arm	Linked arm	Use O-D data	Average Demand (PCU/hr)	Scaling Factor (%)
1		✓	795	100.000
2		✓	434	100.000
3		✓	656	100.000

Origin-Destination Data

Demand (PCU/hr)

		To		
		1	2	3
From	1	0	203	592
	2	185	0	249
	3	374	282	0

Vehicle Mix

Heavy Vehicle Percentages

		To		
		1	2	3
From	1	0	0	2
	2	0	0	0
	3	2	0	0

Results

Results Summary for whole modelled period

Arm	Max RFC	Max Delay (s)	Max Queue (PCU)	Max LOS
1	0.84	21.46	5.0	C
2	0.71	18.36	2.4	C
3	0.70	11.68	2.3	B

Main Results for each time segment

07:45 - 08:00

Arm	Total Demand (PCU/hr)	Circulating flow (PCU/hr)	Capacity (PCU/hr)	RFC	Throughput (PCU/hr)	End queue (PCU)	Delay (s)	Unsignalised level of service
1	599	211	1106	0.541	594	1.2	7.067	A
2	327	442	812	0.402	324	0.7	7.339	A
3	494	138	1076	0.459	490	0.8	6.184	A

08:00 - 08:15

Arm	Total Demand (PCU/hr)	Circulating flow (PCU/hr)	Capacity (PCU/hr)	RFC	Throughput (PCU/hr)	End queue (PCU)	Delay (s)	Unsignalised level of service
1	715	253	1079	0.662	712	1.9	9.863	A
2	390	530	753	0.518	389	1.1	9.827	A
3	590	166	1058	0.557	588	1.3	7.722	A

08:15 - 08:30

Arm	Total Demand (PCU/hr)	Circulating flow (PCU/hr)	Capacity (PCU/hr)	RFC	Throughput (PCU/hr)	End queue (PCU)	Delay (s)	Unsignalised level of service
1	875	309	1043	0.840	864	4.7	19.369	C
2	478	644	677	0.705	473	2.3	17.218	C
3	722	202	1034	0.698	718	2.2	11.369	B

08:30 - 08:45

Arm	Total Demand (PCU/hr)	Circulating flow (PCU/hr)	Capacity (PCU/hr)	RFC	Throughput (PCU/hr)	End queue (PCU)	Delay (s)	Unsignalised level of service
1	875	310	1042	0.840	874	5.0	21.461	C
2	478	651	672	0.711	477	2.4	18.360	C
3	722	204	1033	0.699	722	2.3	11.678	B

08:45 - 09:00

Arm	Total Demand (PCU/hr)	Circulating flow (PCU/hr)	Capacity (PCU/hr)	RFC	Throughput (PCU/hr)	End queue (PCU)	Delay (s)	Unsignalised level of service
1	715	255	1077	0.663	726	2.1	10.730	B
2	390	541	746	0.523	395	1.1	10.396	B
3	590	168	1056	0.558	594	1.3	7.939	A

09:00 - 09:15

Arm	Total Demand (PCU/hr)	Circulating flow (PCU/hr)	Capacity (PCU/hr)	RFC	Throughput (PCU/hr)	End queue (PCU)	Delay (s)	Unsignalised level of service
1	599	213	1105	0.542	602	1.2	7.310	A
2	327	448	808	0.404	328	0.7	7.536	A
3	494	140	1075	0.460	496	0.9	6.308	A

2028, PM

Data Errors and Warnings

No errors or warnings

Junction Network

Junctions

Junction	Name	Junction type	Use circulating lanes	Arm order	Junction Delay (s)	Junction LOS
1	untitled	Mini-roundabout		1, 2, 3	9.15	A

Junction Network

Driving side	Lighting	Road surface	In London	Network residual capacity (%)	First arm reaching threshold	Network delay (s)	Network LOS
Left	Normal/unknown	Normal/unknown		24	Arm 3	9.15	A

Traffic Demand

Demand Set Details

ID	Scenario name	Time Period name	Traffic profile type	Start time (HH:mm)	Finish time (HH:mm)	Time segment length (min)
D2	2028	PM	ONE HOUR	16:45	18:15	15

Vehicle mix source	PCU Factor for a HV (PCU)
HV Percentages	2.00

Demand overview (Traffic)

Arm	Linked arm	Use O-D data	Average Demand (PCU/hr)	Scaling Factor (%)
1		✓	440	100.000
2		✓	280	100.000
3		✓	711	100.000

Origin-Destination Data

Demand (PCU/hr)

		To		
		1	2	3
From	1	0	94	346
	2	121	0	159
	3	507	204	0

Vehicle Mix

Heavy Vehicle Percentages

		To		
		1	2	3
From	1	0	0	2
	2	0	0	0
	3	0	0	0

Results

Results Summary for whole modelled period

Arm	Max RFC	Max Delay (s)	Max Queue (PCU)	Max LOS
1	0.44	5.96	0.8	A
2	0.36	6.61	0.6	A
3	0.73	12.12	2.6	B

Main Results for each time segment

16:45 - 17:00

Arm	Total Demand (PCU/hr)	Circulating flow (PCU/hr)	Capacity (PCU/hr)	RFC	Throughput (PCU/hr)	End queue (PCU)	Delay (s)	Unsignalised level of service
1	331	153	1144	0.290	330	0.4	4.479	A
2	211	259	934	0.226	210	0.3	4.959	A
3	535	91	1107	0.484	532	0.9	6.219	A

17:00 - 17:15

Arm	Total Demand (PCU/hr)	Circulating flow (PCU/hr)	Capacity (PCU/hr)	RFC	Throughput (PCU/hr)	End queue (PCU)	Delay (s)	Unsignalised level of service
1	396	183	1124	0.352	395	0.5	5.009	A
2	252	311	900	0.280	251	0.4	5.546	A
3	639	109	1095	0.584	637	1.4	7.834	A

17:15 - 17:30

Arm	Total Demand (PCU/hr)	Circulating flow (PCU/hr)	Capacity (PCU/hr)	RFC	Throughput (PCU/hr)	End queue (PCU)	Delay (s)	Unsignalised level of service
1	484	223	1098	0.441	483	0.8	5.938	A
2	308	380	853	0.361	308	0.6	6.586	A
3	783	133	1079	0.725	778	2.5	11.779	B

17:30 - 17:45

Arm	Total Demand (PCU/hr)	Circulating flow (PCU/hr)	Capacity (PCU/hr)	RFC	Throughput (PCU/hr)	End queue (PCU)	Delay (s)	Unsignalised level of service
1	484	225	1097	0.441	484	0.8	5.964	A
2	308	381	853	0.361	308	0.6	6.608	A
3	783	133	1079	0.725	783	2.6	12.119	B

17:45 - 18:00

Arm	Total Demand (PCU/hr)	Circulating flow (PCU/hr)	Capacity (PCU/hr)	RFC	Throughput (PCU/hr)	End queue (PCU)	Delay (s)	Unsignalised level of service
1	396	185	1123	0.352	397	0.6	5.037	A
2	252	312	899	0.280	252	0.4	5.573	A
3	639	109	1095	0.584	644	1.4	8.063	A

18:00 - 18:15

Arm	Total Demand (PCU/hr)	Circulating flow (PCU/hr)	Capacity (PCU/hr)	RFC	Throughput (PCU/hr)	End queue (PCU)	Delay (s)	Unsignalised level of service
1	331	154	1143	0.290	332	0.4	4.509	A
2	211	261	933	0.226	211	0.3	4.988	A
3	535	91	1106	0.484	537	0.9	6.348	A

2043, AM

Data Errors and Warnings

No errors or warnings

Junction Network

Junctions

Junction	Name	Junction type	Use circulating lanes	Arm order	Junction Delay (s)	Junction LOS
1	untitled	Mini-roundabout		1, 2, 3	20.27	C

Junction Network

Driving side	Lighting	Road surface	In London	Network residual capacity (%)	First arm reaching threshold	Network delay (s)	Network LOS
Left	Normal/unknown	Normal/unknown		4	Arm 1	20.27	C

Traffic Demand

Demand Set Details

ID	Scenario name	Time Period name	Traffic profile type	Start time (HH:mm)	Finish time (HH:mm)	Time segment length (min)
D3	2043	AM	ONE HOUR	07:45	09:15	15

Vehicle mix source	PCU Factor for a HV (PCU)
HV Percentages	2.00

Demand overview (Traffic)

Arm	Linked arm	Use O-D data	Average Demand (PCU/hr)	Scaling Factor (%)
1		✓	817	100.000
2		✓	450	100.000
3		✓	677	100.000

Origin-Destination Data

Demand (PCU/hr)

		To		
		1	2	3
From	1	0	211	606
	2	192	0	258
	3	385	292	0

Vehicle Mix

Heavy Vehicle Percentages

		To		
		1	2	3
From	1	0	0	2
	2	0	0	0
	3	2	0	0

Results

Results Summary for whole modelled period

Arm	Max RFC	Max Delay (s)	Max Queue (PCU)	Max LOS
1	0.87	25.89	6.1	D
2	0.75	21.27	2.8	C
3	0.72	12.82	2.6	B

Main Results for each time segment

07:45 - 08:00

Arm	Total Demand (PCU/hr)	Circulating flow (PCU/hr)	Capacity (PCU/hr)	RFC	Throughput (PCU/hr)	End queue (PCU)	Delay (s)	Unsignalised level of service
1	615	218	1101	0.558	610	1.3	7.360	A
2	339	452	805	0.421	336	0.7	7.627	A
3	510	143	1072	0.475	506	0.9	6.387	A

08:00 - 08:15

Arm	Total Demand (PCU/hr)	Circulating flow (PCU/hr)	Capacity (PCU/hr)	RFC	Throughput (PCU/hr)	End queue (PCU)	Delay (s)	Unsignalised level of service
1	734	262	1073	0.684	731	2.1	10.566	B
2	405	542	745	0.543	403	1.2	10.458	B
3	609	172	1054	0.578	607	1.4	8.110	A

08:15 - 08:30

Arm	Total Demand (PCU/hr)	Circulating flow (PCU/hr)	Capacity (PCU/hr)	RFC	Throughput (PCU/hr)	End queue (PCU)	Delay (s)	Unsignalised level of service
1	900	319	1036	0.869	885	5.6	22.455	C
2	495	657	669	0.741	490	2.6	19.479	C
3	745	209	1030	0.724	741	2.5	12.391	B

08:30 - 08:45

Arm	Total Demand (PCU/hr)	Circulating flow (PCU/hr)	Capacity (PCU/hr)	RFC	Throughput (PCU/hr)	End queue (PCU)	Delay (s)	Unsignalised level of service
1	900	321	1034	0.870	898	6.1	25.891	D
2	495	666	663	0.748	495	2.8	21.270	C
3	745	211	1028	0.725	745	2.6	12.824	B

08:45 - 09:00

Arm	Total Demand (PCU/hr)	Circulating flow (PCU/hr)	Capacity (PCU/hr)	RFC	Throughput (PCU/hr)	End queue (PCU)	Delay (s)	Unsignalised level of service
1	734	265	1071	0.686	750	2.3	11.857	B
2	405	556	736	0.550	411	1.3	11.276	B
3	609	175	1052	0.579	613	1.4	8.393	A

09:00 - 09:15

Arm	Total Demand (PCU/hr)	Circulating flow (PCU/hr)	Capacity (PCU/hr)	RFC	Throughput (PCU/hr)	End queue (PCU)	Delay (s)	Unsignalised level of service
1	615	221	1100	0.559	619	1.3	7.659	A
2	339	459	801	0.423	341	0.7	7.862	A
3	510	145	1071	0.476	512	0.9	6.531	A

2043, PM

Data Errors and Warnings

No errors or warnings

Junction Network

Junctions

Junction	Name	Junction type	Use circulating lanes	Arm order	Junction Delay (s)	Junction LOS
1	untitled	Mini-roundabout		1, 2, 3	9.90	A

Junction Network

Driving side	Lighting	Road surface	In London	Network residual capacity (%)	First arm reaching threshold	Network delay (s)	Network LOS
Left	Normal/unknown	Normal/unknown		20	Arm 3	9.90	A

Traffic Demand

Demand Set Details

ID	Scenario name	Time Period name	Traffic profile type	Start time (HH:mm)	Finish time (HH:mm)	Time segment length (min)
D4	2043	PM	ONE HOUR	16:45	18:15	15

Vehicle mix source	PCU Factor for a HV (PCU)
HV Percentages	2.00

Demand overview (Traffic)

Arm	Linked arm	Use O-D data	Average Demand (PCU/hr)	Scaling Factor (%)
1		✓	451	100.000
2		✓	291	100.000
3		✓	731	100.000

Origin-Destination Data

Demand (PCU/hr)

		To		
		1	2	3
From	1	0	97	354
	2	126	0	165
	3	519	212	0

Vehicle Mix

Heavy Vehicle Percentages

		To		
		1	2	3
From	1	0	0	2
	2	0	0	0
	3	2	0	0

Results

Results Summary for whole modelled period

Arm	Max RFC	Max Delay (s)	Max Queue (PCU)	Max LOS
1	0.45	6.14	0.8	A
2	0.38	6.83	0.6	A
3	0.75	13.43	2.9	B

Main Results for each time segment

16:45 - 17:00

Arm	Total Demand (PCU/hr)	Circulating flow (PCU/hr)	Capacity (PCU/hr)	RFC	Throughput (PCU/hr)	End queue (PCU)	Delay (s)	Unsignalised level of service
1	340	158	1140	0.298	338	0.4	4.547	A
2	219	265	930	0.235	218	0.3	5.045	A
3	550	94	1104	0.498	546	1.0	6.498	A

17:00 - 17:15

Arm	Total Demand (PCU/hr)	Circulating flow (PCU/hr)	Capacity (PCU/hr)	RFC	Throughput (PCU/hr)	End queue (PCU)	Delay (s)	Unsignalised level of service
1	405	190	1120	0.362	405	0.6	5.109	A
2	262	318	895	0.292	261	0.4	5.674	A
3	657	113	1092	0.602	655	1.5	8.313	A

17:15 - 17:30

Arm	Total Demand (PCU/hr)	Circulating flow (PCU/hr)	Capacity (PCU/hr)	RFC	Throughput (PCU/hr)	End queue (PCU)	Delay (s)	Unsignalised level of service
1	497	232	1093	0.454	496	0.8	6.111	A
2	320	389	848	0.378	320	0.6	6.808	A
3	805	138	1076	0.748	799	2.9	12.961	B

17:30 - 17:45

Arm	Total Demand (PCU/hr)	Circulating flow (PCU/hr)	Capacity (PCU/hr)	RFC	Throughput (PCU/hr)	End queue (PCU)	Delay (s)	Unsignalised level of service
1	497	233	1092	0.455	497	0.8	6.143	A
2	320	390	847	0.378	320	0.6	6.834	A
3	805	139	1075	0.748	805	2.9	13.435	B

17:45 - 18:00

Arm	Total Demand (PCU/hr)	Circulating flow (PCU/hr)	Capacity (PCU/hr)	RFC	Throughput (PCU/hr)	End queue (PCU)	Delay (s)	Unsignalised level of service
1	405	192	1118	0.363	406	0.6	5.144	A
2	262	319	894	0.293	262	0.4	5.702	A
3	657	114	1092	0.602	663	1.6	8.610	A

18:00 - 18:15

Arm	Total Demand (PCU/hr)	Circulating flow (PCU/hr)	Capacity (PCU/hr)	RFC	Throughput (PCU/hr)	End queue (PCU)	Delay (s)	Unsignalised level of service
1	340	160	1139	0.298	340	0.4	4.578	A
2	219	267	929	0.236	220	0.3	5.075	A
3	550	95	1104	0.499	553	1.0	6.646	A

APPENDIX J

PiCADY Capacity Modelling
Existing R725 / R772 Exit Only T- Junction

Existing R725 / R772 Exit Only T- Junction
Capacity Assessment With Subject Development Open & Fully Occupied

WITH COMPLETED DEVELOPMENT TRAFFIC INCLUDED		
Modelled Scenario	Period Mean Max Q (PCUs)	Period Max RFC
2028 Opening Year AM Peak Hr 8-9	8.6	0.93
2028 Opening Year PM Peak Hr 5-6	1.7	0.64
2043 Design Year AM Peak Hr 8-9	12.1	0.97
2043 Design Year PM Peak Hr 5-6	1.9	0.66

The Existing R772 McCurtain Street / R772 Enniscorthy Road Exit Only Junction is approaching capacity but within acceptable operational limits, and therefore no problems whatsoever are anticipated at the Junction in terms of capacity or excessive vehicle Queues

NB - Any Small Changes to Selected Opening Year 2028 or Design Year 2043, or indeed significantly higher traffic volumes experienced, clearly from the positive results presented, will have no significant implications in terms of the conclusions of the Study

Junctions 10

PICADY 10 - Priority Intersection Module

Version: 10.0.4.1693
© Copyright TRL Software Limited, 2021

For sales and distribution information, program advice and maintenance, contact TRL Software:
+44 (0)1344 379777 software@trl.co.uk trlsoftware.com

The users of this computer program for the solution of an engineering problem are in no way relieved of their responsibility for the correctness of the solution

Filename: R725 - R772 Exit Only Junction.j10
Path: C:\Users\BrianMc\OneDrive\OneDrive - NRB Consulting Engineers Ltd\Documents\2025\25-030 Gorey LRD\Calculations\Junction Analysis\J - Existing R725 - R772 Exit Only
Report generation date: 01/11/2025 19:32:28

»2028, AM
»2028, PM
»2043, AM
»2043, PM

Summary of junction performance

	AM						PM					
	Set ID	Queue (PCU)	Delay (s)	RFC	LOS	Network Residual Capacity	Set ID	Queue (PCU)	Delay (s)	RFC	LOS	Network Residual Capacity
	2028											
Stream B-C	D1	5.6	49.72	0.87	E	-9 % [Stream B-A]	D2	0.7	10.88	0.42	B	21 % [Stream B-A]
Stream B-A		8.6	65.37	0.93	F			1.7	18.09	0.64	C	
Stream C-AB		0.0	0.00	0.00	A			0.0	0.00	0.00	A	
	2043											
Stream B-C	D3	6.9	60.28	0.90	F	-12 % [Stream B-A]	D4	0.7	11.27	0.43	B	17 % [Stream B-A]
Stream B-A		12.1	86.74	0.97	F			1.9	19.68	0.66	C	
Stream C-AB		0.0	0.00	0.00	A			0.0	0.00	0.00	A	

Values shown are the highest values encountered over all time segments. Delay is the maximum value of average delay per arriving vehicle. Network Residual Capacity indicates the amount by which network flow could be increased before a user-definable threshold (see Analysis Options) is met.

File summary

File Description

Title	
Location	
Site number	
Date	01/11/2025
Version	
Status	(new file)
Identifier	
Client	
Jobnumber	
Enumerator	Office-LT\BrianMc
Description	

Units

Distance units	Speed units	Traffic units input	Traffic units results	Flow units	Average delay units	Total delay units	Rate of delay units
m	kph	PCU	PCU	perHour	s	-Min	perMin

Analysis Options

Calculate Queue Percentiles	Calculate residual capacity	Residual capacity criteria type	RFC Threshold	Average Delay threshold (s)	Queue threshold (PCU)
	✓	Delay	0.85	36.00	20.00

Demand Set Summary

ID	Scenario name	Time Period name	Traffic profile type	Start time (HH:mm)	Finish time (HH:mm)	Time segment length (min)
D1	2028	AM	ONE HOUR	07:45	09:15	15
D2	2028	PM	ONE HOUR	16:45	18:15	15
D3	2043	AM	ONE HOUR	07:45	09:15	15
D4	2043	PM	ONE HOUR	16:45	18:15	15

Analysis Set Details

ID	Network flow scaling factor (%)
A1	100.000

2028, AM

Data Errors and Warnings

No errors or warnings

Junction Network

Junctions

Junction	Name	Junction type	Arm A Direction	Arm B Direction	Arm C Direction	Use circulating lanes	Junction Delay (s)	Junction LOS
1	untitled	T-Junction	Two-way	Entry Only	Two-way		33.31	D

Junction Network

Driving side	Lighting	Network residual capacity (%)	First arm reaching threshold	Network delay (s)	Network LOS
Left	Normal/unknown	-9	Stream B-A	33.31	D

Arms

Arms

Arm	Name	Description	Arm type
A	R772 (West)		Major
B	R725		Minor
C	R772 (East)		Major

Major Arm Geometry

Arm	Width of carriageway (m)	Has kerbed central reserve	Width of kerbed central reserve (m)	Has right-turn storage	Visibility for right turn (m)	Blocks?	Blocking queue (PCU)
C	11.50	✓	3.00		65.0	✓	0.00

Geometries for Arm C are measured opposite Arm B. Geometries for Arm A (if relevant) are measured opposite Arm D.

Minor Arm Geometry

Arm	Minor arm type	Lane Width (Left) (m)	Lane Width (Right) (m)	Visibility to left (m)	Visibility to right (m)
B	Two lanes	3.60	4.36	100	85

Slope / Intercept / Capacity

Priority Intersection Slopes and Intercepts

Stream	Intercept (PCU/hr)	Slope for A-B	Slope for A-C	Slope for C-A	Slope for C-B
B-A	670	0.087	0.220	0.138	0.314
B-C	718	0.084	0.212	-	-
C-B	612	0.180	0.180	-	-

The slopes and intercepts shown above include custom intercept adjustments only.

Streams may be combined, in which case capacity will be adjusted.

Values are shown for the first time segment only; they may differ for subsequent time segments.

Traffic Demand

Demand Set Details

ID	Scenario name	Time Period name	Traffic profile type	Start time (HH:mm)	Finish time (HH:mm)	Time segment length (min)
D1	2028	AM	ONE HOUR	07:45	09:15	15

Vehicle mix source	PCU Factor for a HV (PCU)
HV Percentages	2.00

Demand overview (Traffic)

Arm	Linked arm	Use O-D data	Average Demand (PCU/hr)	Scaling Factor (%)
A		✓	250	100.000
B		✓	858	100.000
C		✓	390	100.000

Origin-Destination Data

Demand (PCU/hr)

		To		
		A	B	C
From	A	0	0	250
	B	463	0	395
	C	390	0	0

Vehicle Mix

Heavy Vehicle Percentages

		To		
		A	B	C
From	A	0	0	2
	B	0	0	0
	C	2	0	0

Results

Results Summary for whole modelled period

Stream	Max RFC	Max Delay (s)	Max Queue (PCU)	Max LOS
B-C	0.87	49.72	5.6	E
B-A	0.93	65.37	8.6	F
C-AB	0.00	0.00	0.0	A
C-A				
A-B				
A-C				

Main Results for each time segment

07:45 - 08:00

Stream	Total Demand (PCU/hr)	Capacity (PCU/hr)	RFC	Throughput (PCU/hr)	End queue (PCU)	Delay (s)	Unsignalised level of service
B-C	297	578	0.515	293	1.0	12.479	B
B-A	349	588	0.592	343	1.4	14.366	B
C-AB	0	578	0.000	0	0.0	0.000	A
C-A	294			294			
A-B	0			0			
A-C	188			188			

08:00 - 08:15

Stream	Total Demand (PCU/hr)	Capacity (PCU/hr)	RFC	Throughput (PCU/hr)	End queue (PCU)	Delay (s)	Unsignalised level of service
B-C	355	547	0.649	352	1.8	18.198	C
B-A	416	572	0.727	412	2.5	21.843	C
C-AB	0	571	0.000	0	0.0	0.000	A
C-A	351			351			
A-B	0			0			
A-C	225			225			

08:15 - 08:30

Stream	Total Demand (PCU/hr)	Capacity (PCU/hr)	RFC	Throughput (PCU/hr)	End queue (PCU)	Delay (s)	Unsignalised level of service
B-C	435	504	0.863	423	4.8	39.408	E
B-A	510	550	0.926	491	7.2	49.211	E
C-AB	0	562	0.000	0	0.0	0.000	A
C-A	429			429			
A-B	0			0			
A-C	275			275			

08:30 - 08:45

Stream	Total Demand (PCU/hr)	Capacity (PCU/hr)	RFC	Throughput (PCU/hr)	End queue (PCU)	Delay (s)	Unsignalised level of service
B-C	435	498	0.872	432	5.6	49.716	E
B-A	510	550	0.926	504	8.6	65.368	F
C-AB	0	562	0.000	0	0.0	0.000	A
C-A	429			429			
A-B	0			0			
A-C	275			275			

08:45 - 09:00

Stream	Total Demand (PCU/hr)	Capacity (PCU/hr)	RFC	Throughput (PCU/hr)	End queue (PCU)	Delay (s)	Unsignalised level of service
B-C	355	539	0.659	369	2.1	22.778	C
B-A	416	572	0.727	439	2.9	30.499	D
C-AB	0	571	0.000	0	0.0	0.000	A
C-A	351			351			
A-B	0			0			
A-C	225			225			

09:00 - 09:15

Stream	Total Demand (PCU/hr)	Capacity (PCU/hr)	RFC	Throughput (PCU/hr)	End queue (PCU)	Delay (s)	Unsignalised level of service
B-C	297	574	0.518	301	1.1	13.349	B
B-A	349	588	0.592	354	1.5	15.717	C
C-AB	0	578	0.000	0	0.0	0.000	A
C-A	294			294			
A-B	0			0			
A-C	188			188			

2028, PM

Data Errors and Warnings

No errors or warnings

Junction Network

Junctions

Junction	Name	Junction type	Arm A Direction	Arm B Direction	Arm C Direction	Use circulating lanes	Junction Delay (s)	Junction LOS
1	untitled	T-Junction	Two-way	Entry Only	Two-way		6.53	A

Junction Network

Driving side	Lighting	Network residual capacity (%)	First arm reaching threshold	Network delay (s)	Network LOS
Left	Normal/unknown	21	Stream B-A	6.53	A

Traffic Demand

Demand Set Details

ID	Scenario name	Time Period name	Traffic profile type	Start time (HH:mm)	Finish time (HH:mm)	Time segment length (min)
D2	2028	PM	ONE HOUR	16:45	18:15	15

Vehicle mix source	PCU Factor for a HV (PCU)
HV Percentages	2.00

Demand overview (Traffic)

Arm	Linked arm	Use O-D data	Average Demand (PCU/hr)	Scaling Factor (%)
A		✓	179	100.000
B		✓	531	100.000
C		✓	525	100.000

Origin-Destination Data

Demand (PCU/hr)

		To		
		A	B	C
From	A	0	0	179
	B	317	0	214
	C	525	0	0

Vehicle Mix

Heavy Vehicle Percentages

		To		
		A	B	C
From	A	0	0	2
	B	0	0	0
	C	2	0	0

Results

Results Summary for whole modelled period

Stream	Max RFC	Max Delay (s)	Max Queue (PCU)	Max LOS
B-C	0.42	10.88	0.7	B
B-A	0.64	18.09	1.7	C
C-AB	0.00	0.00	0.0	A
C-A				
A-B				
A-C				

Main Results for each time segment

16:45 - 17:00

Stream	Total Demand (PCU/hr)	Capacity (PCU/hr)	RFC	Throughput (PCU/hr)	End queue (PCU)	Delay (s)	Unsignalised level of service
B-C	161	619	0.260	160	0.3	7.808	A
B-A	239	586	0.407	236	0.7	10.208	B
C-AB	0	587	0.000	0	0.0	0.000	A
C-A	395			395			
A-B	0			0			
A-C	135			135			

17:00 - 17:15

Stream	Total Demand (PCU/hr)	Capacity (PCU/hr)	RFC	Throughput (PCU/hr)	End queue (PCU)	Delay (s)	Unsignalised level of service
B-C	192	598	0.322	192	0.5	8.860	A
B-A	285	570	0.500	284	1.0	12.535	B
C-AB	0	583	0.000	0	0.0	0.000	A
C-A	472			472			
A-B	0			0			
A-C	161			161			

17:15 - 17:30

Stream	Total Demand (PCU/hr)	Capacity (PCU/hr)	RFC	Throughput (PCU/hr)	End queue (PCU)	Delay (s)	Unsignalised level of service
B-C	236	567	0.415	235	0.7	10.793	B
B-A	349	547	0.638	346	1.7	17.673	C
C-AB	0	576	0.000	0	0.0	0.000	A
C-A	578			578			
A-B	0			0			
A-C	197			197			

17:30 - 17:45

Stream	Total Demand (PCU/hr)	Capacity (PCU/hr)	RFC	Throughput (PCU/hr)	End queue (PCU)	Delay (s)	Unsignalised level of service
B-C	236	566	0.416	236	0.7	10.878	B
B-A	349	547	0.638	349	1.7	18.095	C
C-AB	0	576	0.000	0	0.0	0.000	A
C-A	578			578			
A-B	0			0			
A-C	197			197			

17:45 - 18:00

Stream	Total Demand (PCU/hr)	Capacity (PCU/hr)	RFC	Throughput (PCU/hr)	End queue (PCU)	Delay (s)	Unsignalised level of service
B-C	192	596	0.323	193	0.5	8.947	A
B-A	285	570	0.500	288	1.0	12.891	B
C-AB	0	583	0.000	0	0.0	0.000	A
C-A	472			472			
A-B	0			0			
A-C	161			161			

18:00 - 18:15

Stream	Total Demand (PCU/hr)	Capacity (PCU/hr)	RFC	Throughput (PCU/hr)	End queue (PCU)	Delay (s)	Unsignalised level of service
B-C	161	618	0.261	162	0.4	7.893	A
B-A	239	586	0.407	240	0.7	10.440	B
C-AB	0	587	0.000	0	0.0	0.000	A
C-A	395			395			
A-B	0			0			
A-C	135			135			

2043, AM

Data Errors and Warnings

No errors or warnings

Junction Network

Junctions

Junction	Name	Junction type	Arm A Direction	Arm B Direction	Arm C Direction	Use circulating lanes	Junction Delay (s)	Junction LOS
1	untitled	T-Junction	Two-way	Entry Only	Two-way		42.63	E

Junction Network

Driving side	Lighting	Network residual capacity (%)	First arm reaching threshold	Network delay (s)	Network LOS
Left	Normal/unknown	-12	Stream B-A	42.63	E

Traffic Demand

Demand Set Details

ID	Scenario name	Time Period name	Traffic profile type	Start time (HH:mm)	Finish time (HH:mm)	Time segment length (min)
D3	2043	AM	ONE HOUR	07:45	09:15	15

Vehicle mix source	PCU Factor for a HV (PCU)
HV Percentages	2.00

Demand overview (Traffic)

Arm	Linked arm	Use O-D data	Average Demand (PCU/hr)	Scaling Factor (%)
A		✓	260	100.000
B		✓	883	100.000
C		✓	403	100.000

Origin-Destination Data

Demand (PCU/hr)

		To		
		A	B	C
From	A	0	0	260
	B	479	0	404
	C	403	0	0

Vehicle Mix

Heavy Vehicle Percentages

		To		
		A	B	C
From	A	0	0	2
	B	0	0	0
	C	2	0	0

Results

Results Summary for whole modelled period

Stream	Max RFC	Max Delay (s)	Max Queue (PCU)	Max LOS
B-C	0.90	60.28	6.9	F
B-A	0.97	86.74	12.1	F
C-AB	0.00	0.00	0.0	A
C-A				
A-B				
A-C				

Main Results for each time segment

07:45 - 08:00

Stream	Total Demand (PCU/hr)	Capacity (PCU/hr)	RFC	Throughput (PCU/hr)	End queue (PCU)	Delay (s)	Unsignalised level of service
B-C	304	572	0.531	300	1.1	13.003	B
B-A	361	585	0.616	354	1.5	15.220	C
C-AB	0	576	0.000	0	0.0	0.000	A
C-A	303			303			
A-B	0			0			
A-C	196			196			

08:00 - 08:15

Stream	Total Demand (PCU/hr)	Capacity (PCU/hr)	RFC	Throughput (PCU/hr)	End queue (PCU)	Delay (s)	Unsignalised level of service
B-C	363	540	0.672	360	1.9	19.581	C
B-A	431	569	0.757	425	2.8	24.228	C
C-AB	0	569	0.000	0	0.0	0.000	A
C-A	362			362			
A-B	0			0			
A-C	234			234			

08:15 - 08:30

Stream	Total Demand (PCU/hr)	Capacity (PCU/hr)	RFC	Throughput (PCU/hr)	End queue (PCU)	Delay (s)	Unsignalised level of service
B-C	445	495	0.898	429	5.8	46.180	E
B-A	527	546	0.966	501	9.3	59.623	F
C-AB	0	560	0.000	0	0.0	0.000	A
C-A	444			444			
A-B	0			0			
A-C	286			286			

08:30 - 08:45

Stream	Total Demand (PCU/hr)	Capacity (PCU/hr)	RFC	Throughput (PCU/hr)	End queue (PCU)	Delay (s)	Unsignalised level of service
B-C	445	493	0.902	440	6.9	60.276	F
B-A	527	546	0.966	516	12.1	86.742	F
C-AB	0	560	0.000	0	0.0	0.000	A
C-A	444			444			
A-B	0			0			
A-C	286			286			

08:45 - 09:00

Stream	Total Demand (PCU/hr)	Capacity (PCU/hr)	RFC	Throughput (PCU/hr)	End queue (PCU)	Delay (s)	Unsignalised level of service
B-C	363	528	0.688	381	2.4	27.041	D
B-A	431	569	0.757	465	3.5	41.712	E
C-AB	0	569	0.000	0	0.0	0.000	A
C-A	362			362			
A-B	0			0			
A-C	234			234			

09:00 - 09:15

Stream	Total Demand (PCU/hr)	Capacity (PCU/hr)	RFC	Throughput (PCU/hr)	End queue (PCU)	Delay (s)	Unsignalised level of service
B-C	304	568	0.535	309	1.2	14.112	B
B-A	361	585	0.616	368	1.7	17.069	C
C-AB	0	576	0.000	0	0.0	0.000	A
C-A	303			303			
A-B	0			0			
A-C	196			196			

2043, PM

Data Errors and Warnings

No errors or warnings

Junction Network

Junctions

Junction	Name	Junction type	Arm A Direction	Arm B Direction	Arm C Direction	Use circulating lanes	Junction Delay (s)	Junction LOS
1	untitled	T-Junction	Two-way	Entry Only	Two-way		7.01	A

Junction Network

Driving side	Lighting	Network residual capacity (%)	First arm reaching threshold	Network delay (s)	Network LOS
Left	Normal/unknown	17	Stream B-A	7.01	A

Traffic Demand

Demand Set Details

ID	Scenario name	Time Period name	Traffic profile type	Start time (HH:mm)	Finish time (HH:mm)	Time segment length (min)
D4	2043	PM	ONE HOUR	16:45	18:15	15

Vehicle mix source	PCU Factor for a HV (PCU)
HV Percentages	2.00

Demand overview (Traffic)

Arm	Linked arm	Use O-D data	Average Demand (PCU/hr)	Scaling Factor (%)
A		✓	185	100.000
B		✓	547	100.000
C		✓	540	100.000

Origin-Destination Data

Demand (PCU/hr)

		To		
		A	B	C
From	A	0	0	185
	B	328	0	219
	C	540	0	0

Vehicle Mix

Heavy Vehicle Percentages

		To		
		A	B	C
From	A	0	0	2
	B	0	0	0
	C	2	0	0

Results

Results Summary for whole modelled period

Stream	Max RFC	Max Delay (s)	Max Queue (PCU)	Max LOS
B-C	0.43	11.27	0.7	B
B-A	0.66	19.68	1.9	C
C-AB	0.00	0.00	0.0	A
C-A				
A-B				
A-C				

Main Results for each time segment

16:45 - 17:00

Stream	Total Demand (PCU/hr)	Capacity (PCU/hr)	RFC	Throughput (PCU/hr)	End queue (PCU)	Delay (s)	Unsignalised level of service
B-C	165	616	0.268	163	0.4	7.933	A
B-A	247	584	0.423	244	0.7	10.520	B
C-AB	0	586	0.000	0	0.0	0.000	A
C-A	407			407			
A-B	0			0			
A-C	139			139			

17:00 - 17:15

Stream	Total Demand (PCU/hr)	Capacity (PCU/hr)	RFC	Throughput (PCU/hr)	End queue (PCU)	Delay (s)	Unsignalised level of service
B-C	197	593	0.332	196	0.5	9.059	A
B-A	295	567	0.520	294	1.1	13.113	B
C-AB	0	582	0.000	0	0.0	0.000	A
C-A	485			485			
A-B	0			0			
A-C	166			166			

17:15 - 17:30

Stream	Total Demand (PCU/hr)	Capacity (PCU/hr)	RFC	Throughput (PCU/hr)	End queue (PCU)	Delay (s)	Unsignalised level of service
B-C	241	562	0.429	240	0.7	11.130	B
B-A	361	543	0.665	358	1.9	19.072	C
C-AB	0	575	0.000	0	0.0	0.000	A
C-A	595			595			
A-B	0			0			
A-C	204			204			

17:30 - 17:45

Stream	Total Demand (PCU/hr)	Capacity (PCU/hr)	RFC	Throughput (PCU/hr)	End queue (PCU)	Delay (s)	Unsignalised level of service
B-C	241	561	0.430	241	0.7	11.265	B
B-A	361	543	0.665	361	1.9	19.676	C
C-AB	0	575	0.000	0	0.0	0.000	A
C-A	595			595			
A-B	0			0			
A-C	204			204			

17:45 - 18:00

Stream	Total Demand (PCU/hr)	Capacity (PCU/hr)	RFC	Throughput (PCU/hr)	End queue (PCU)	Delay (s)	Unsignalised level of service
B-C	197	592	0.333	198	0.5	9.162	A
B-A	295	567	0.520	298	1.1	13.563	B
C-AB	0	582	0.000	0	0.0	0.000	A
C-A	485			485			
A-B	0			0			
A-C	166			166			

18:00 - 18:15

Stream	Total Demand (PCU/hr)	Capacity (PCU/hr)	RFC	Throughput (PCU/hr)	End queue (PCU)	Delay (s)	Unsignalised level of service
B-C	165	614	0.268	165	0.4	8.027	A
B-A	247	584	0.423	248	0.7	10.789	B
C-AB	0	586	0.000	0	0.0	0.000	A
C-A	407			407			
A-B	0			0			
A-C	139			139			

APPENDIX K

PiCADY Capacity Modelling
Existing R725 / R772 Access Only T- Junction

Existing R725 / R772 Access Only T- Junction
Capacity Assessment With Subject Development Open & Fully Occupied

WITH COMPLETED DEVELOPMENT TRAFFIC INCLUDED		
Modelled Scenario	Period Mean Max Q (PCUs)	Period Max RFC
2028 Opening Year AM Peak Hr 8-9	1.7	0.56
2028 Opening Year PM Peak Hr 5-6	4.8	0.80
2043 Design Year AM Peak Hr 8-9	1.9	0.59
2043 Design Year PM Peak Hr 5-6	5.7	0.82

All Results Above are below the recommended RFC of 0.85 (100% Being Capacity) and therefore no problems whatsoever are anticipated at the Junction in terms of capacity or excessive vehicle Queues

NB - Any Small Changes to Selected Opening Year 2028 or Design Year 2043, or indeed significantly higher traffic volumes experienced, clearly from the positive results presented, will have no significant implications in terms of the conclusions of the Study

Junctions 10

PICADY 10 - Priority Intersection Module

Version: 10.0.4.1693
© Copyright TRL Software Limited, 2021

For sales and distribution information, program advice and maintenance, contact TRL Software:
+44 (0)1344 379777 software@trl.co.uk trlsoftware.com

The users of this computer program for the solution of an engineering problem are in no way relieved of their responsibility for the correctness of the solution

Filename: R725 - R772 Access Only Junction.j10
Path: C:\Users\BrianMc\OneDrive\OneDrive - NRB Consulting Engineers Ltd\Documents\2025\25-030 Gorey LRD\Calculations\Junction Analysis\K - Existing R725 - R772 Access Only
Report generation date: 01/11/2025 19:33:51

»2028, AM
»2028, PM
»2043, AM
»2043, PM

Summary of junction performance

	AM						PM					
	Set ID	Queue (PCU)	Delay (s)	RFC	LOS	Network Residual Capacity	Set ID	Queue (PCU)	Delay (s)	RFC	LOS	Network Residual Capacity
	2028											
Stream B-C	D1	0.0	0.00	0.00	A	29 % [Stream C-AB]	D2	0.0	0.00	0.00	A	5 % [Stream C-AB]
Stream B-A		0.0	0.00	0.00	A			0.0	0.00	0.00	A	
Stream C-AB		1.7	12.58	0.56	B			4.8	25.71	0.80	D	
	2043											
Stream B-C	D3	0.0	0.00	0.00	A	26 % [Stream C-AB]	D4	0.0	0.00	0.00	A	2 % [Stream C-AB]
Stream B-A		0.0	0.00	0.00	A			0.0	0.00	0.00	A	
Stream C-AB		1.9	13.30	0.59	B			5.7	29.73	0.82	D	

Values shown are the highest values encountered over all time segments. Delay is the maximum value of average delay per arriving vehicle. Network Residual Capacity indicates the amount by which network flow could be increased before a user-definable threshold (see Analysis Options) is met.

File summary

File Description

Title	
Location	
Site number	
Date	01/11/2025
Version	
Status	(new file)
Identifier	
Client	
Jobnumber	
Enumerator	Office-LT\BrianMc
Description	

Units

Distance units	Speed units	Traffic units input	Traffic units results	Flow units	Average delay units	Total delay units	Rate of delay units
m	kph	PCU	PCU	perHour	s	-Min	perMin

Analysis Options

Calculate Queue Percentiles	Calculate residual capacity	Residual capacity criteria type	RFC Threshold	Average Delay threshold (s)	Queue threshold (PCU)
	✓	Delay	0.85	36.00	20.00

Demand Set Summary

ID	Scenario name	Time Period name	Traffic profile type	Start time (HH:mm)	Finish time (HH:mm)	Time segment length (min)
D1	2028	AM	ONE HOUR	07:45	09:15	15
D2	2028	PM	ONE HOUR	16:45	18:15	15
D3	2043	AM	ONE HOUR	07:45	09:15	15
D4	2043	PM	ONE HOUR	16:45	18:15	15

Analysis Set Details

ID	Network flow scaling factor (%)
A1	100.000

2028, AM

Data Errors and Warnings

No errors or warnings

Junction Network

Junctions

Junction	Name	Junction type	Arm A Direction	Arm B Direction	Arm C Direction	Use circulating lanes	Junction Delay (s)	Junction LOS
1	untitled	T-Junction	Two-way	Exit Only	Two-way		3.41	A

Junction Network

Driving side	Lighting	Network residual capacity (%)	First arm reaching threshold	Network delay (s)	Network LOS
Left	Normal/unknown	29	Stream C-AB	3.41	A

Arms

Arms

Arm	Name	Description	Arm type
A	R772 (West)		Major
B	R725		Minor
C	R772 (East)		Major

Major Arm Geometry

Arm	Width of carriageway (m)	Has kerbed central reserve	Width of kerbed central reserve (m)	Has right-turn storage	Visibility for right turn (m)	Blocks?	Blocking queue (PCU)
C	11.50	✓	3.00		65.0	✓	0.00

Geometries for Arm C are measured opposite Arm B. Geometries for Arm A (if relevant) are measured opposite Arm D.

Minor Arm Geometry

Arm	Minor arm type	Lane Width (Left) (m)	Lane Width (Right) (m)	Visibility to left (m)	Visibility to right (m)
B		3.60	4.36		

Slope / Intercept / Capacity

Priority Intersection Slopes and Intercepts

Stream	Intercept (PCU/hr)	Slope for A-B	Slope for A-C	Slope for C-A	Slope for C-B
B-A	670	0.087	0.220	0.138	0.314
B-C	718	0.084	0.212	-	-
C-B	612	0.180	0.180	-	-

The slopes and intercepts shown above include custom intercept adjustments only.

Streams may be combined, in which case capacity will be adjusted.

Values are shown for the first time segment only; they may differ for subsequent time segments.

Traffic Demand

Demand Set Details

ID	Scenario name	Time Period name	Traffic profile type	Start time (HH:mm)	Finish time (HH:mm)	Time segment length (min)
D1	2028	AM	ONE HOUR	07:45	09:15	15

Vehicle mix source	PCU Factor for a HV (PCU)
HV Percentages	2.00

Demand overview (Traffic)

Arm	Linked arm	Use O-D data	Average Demand (PCU/hr)	Scaling Factor (%)
A		✓	715	100.000
B		✓	0	100.000
C		✓	444	100.000

Origin-Destination Data

Demand (PCU/hr)

		To		
		A	B	C
From	A	0	465	250
	B	0	0	0
	C	240	204	0

Vehicle Mix

Heavy Vehicle Percentages

		To		
		A	B	C
From	A	0	0	2
	B	0	0	0
	C	2	0	0

Results

Results Summary for whole modelled period

Stream	Max RFC	Max Delay (s)	Max Queue (PCU)	Max LOS
B-C	0.00	0.00	0.0	A
B-A	0.00	0.00	0.0	A
C-AB	0.56	12.58	1.7	B
C-A				
A-B				
A-C				

Main Results for each time segment

07:45 - 08:00

Stream	Total Demand (PCU/hr)	Capacity (PCU/hr)	RFC	Throughput (PCU/hr)	End queue (PCU)	Delay (s)	Unsignalised level of service
B-C	0	649	0.000	0	0.0	0.000	A
B-A	0	525	0.000	0	0.0	0.000	A
C-AB	214	644	0.332	211	0.6	8.342	A
C-A	121			121			
A-B	350			350			
A-C	188			188			

08:00 - 08:15

Stream	Total Demand (PCU/hr)	Capacity (PCU/hr)	RFC	Throughput (PCU/hr)	End queue (PCU)	Delay (s)	Unsignalised level of service
B-C	0	636	0.000	0	0.0	0.000	A
B-A	0	496	0.000	0	0.0	0.000	A
C-AB	275	653	0.421	274	0.9	9.568	A
C-A	124			124			
A-B	418			418			
A-C	225			225			

08:15 - 08:30

Stream	Total Demand (PCU/hr)	Capacity (PCU/hr)	RFC	Throughput (PCU/hr)	End queue (PCU)	Delay (s)	Unsignalised level of service
B-C	0	617	0.000	0	0.0	0.000	A
B-A	0	457	0.000	0	0.0	0.000	A
C-AB	374	666	0.562	371	1.7	12.322	B
C-A	114			114			
A-B	512			512			
A-C	275			275			

08:30 - 08:45

Stream	Total Demand (PCU/hr)	Capacity (PCU/hr)	RFC	Throughput (PCU/hr)	End queue (PCU)	Delay (s)	Unsignalised level of service
B-C	0	617	0.000	0	0.0	0.000	A
B-A	0	456	0.000	0	0.0	0.000	A
C-AB	376	667	0.563	375	1.7	12.582	B
C-A	113			113			
A-B	512			512			
A-C	275			275			

08:45 - 09:00

Stream	Total Demand (PCU/hr)	Capacity (PCU/hr)	RFC	Throughput (PCU/hr)	End queue (PCU)	Delay (s)	Unsignalised level of service
B-C	0	636	0.000	0	0.0	0.000	A
B-A	0	495	0.000	0	0.0	0.000	A
C-AB	276	654	0.422	279	1.0	9.805	A
C-A	123			123			
A-B	418			418			
A-C	225			225			

09:00 - 09:15

Stream	Total Demand (PCU/hr)	Capacity (PCU/hr)	RFC	Throughput (PCU/hr)	End queue (PCU)	Delay (s)	Unsignalised level of service
B-C	0	649	0.000	0	0.0	0.000	A
B-A	0	524	0.000	0	0.0	0.000	A
C-AB	215	645	0.333	216	0.7	8.504	A
C-A	120			120			
A-B	350			350			
A-C	188			188			

2028, PM

Data Errors and Warnings

No errors or warnings

Junction Network

Junctions

Junction	Name	Junction type	Arm A Direction	Arm B Direction	Arm C Direction	Use circulating lanes	Junction Delay (s)	Junction LOS
1	untitled	T-Junction	Two-way	Exit Only	Two-way		10.26	B

Junction Network

Driving side	Lighting	Network residual capacity (%)	First arm reaching threshold	Network delay (s)	Network LOS
Left	Normal/unknown	5	Stream C-AB	10.26	B

Traffic Demand

Demand Set Details

ID	Scenario name	Time Period name	Traffic profile type	Start time (HH:mm)	Finish time (HH:mm)	Time segment length (min)
D2	2028	PM	ONE HOUR	16:45	18:15	15

Vehicle mix source	PCU Factor for a HV (PCU)
HV Percentages	2.00

Demand overview (Traffic)

Arm	Linked arm	Use O-D data	Average Demand (PCU/hr)	Scaling Factor (%)
A		✓	613	100.000
B		✓	0	100.000
C		✓	557	100.000

Origin-Destination Data

Demand (PCU/hr)

		To		
		A	B	C
From	A	0	434	179
	B	0	0	0
	C	262	295	0

Vehicle Mix

Heavy Vehicle Percentages

		To		
		A	B	C
From	A	0	0	2
	B	0	0	0
	C	2	0	0

Results

Results Summary for whole modelled period

Stream	Max RFC	Max Delay (s)	Max Queue (PCU)	Max LOS
B-C	0.00	0.00	0.0	A
B-A	0.00	0.00	0.0	A
C-AB	0.80	25.71	4.8	D
C-A				
A-B				
A-C				

Main Results for each time segment

16:45 - 17:00

Stream	Total Demand (PCU/hr)	Capacity (PCU/hr)	RFC	Throughput (PCU/hr)	End queue (PCU)	Delay (s)	Unsignalised level of service
B-C	0	662	0.000	0	0.0	0.000	A
B-A	0	515	0.000	0	0.0	0.000	A
C-AB	315	668	0.472	311	1.1	10.073	B
C-A	104			104			
A-B	327			327			
A-C	135			135			

17:00 - 17:15

Stream	Total Demand (PCU/hr)	Capacity (PCU/hr)	RFC	Throughput (PCU/hr)	End queue (PCU)	Delay (s)	Unsignalised level of service
B-C	0	651	0.000	0	0.0	0.000	A
B-A	0	484	0.000	0	0.0	0.000	A
C-AB	407	682	0.597	404	1.8	13.052	B
C-A	93			93			
A-B	390			390			
A-C	161			161			

17:15 - 17:30

Stream	Total Demand (PCU/hr)	Capacity (PCU/hr)	RFC	Throughput (PCU/hr)	End queue (PCU)	Delay (s)	Unsignalised level of service
B-C	0	636	0.000	0	0.0	0.000	A
B-A	0	442	0.000	0	0.0	0.000	A
C-AB	556	702	0.793	546	4.4	22.860	C
C-A	57			57			
A-B	478			478			
A-C	197			197			

17:30 - 17:45

Stream	Total Demand (PCU/hr)	Capacity (PCU/hr)	RFC	Throughput (PCU/hr)	End queue (PCU)	Delay (s)	Unsignalised level of service
B-C	0	636	0.000	0	0.0	0.000	A
B-A	0	439	0.000	0	0.0	0.000	A
C-AB	561	705	0.795	560	4.8	25.714	D
C-A	52			52			
A-B	478			478			
A-C	197			197			

17:45 - 18:00

Stream	Total Demand (PCU/hr)	Capacity (PCU/hr)	RFC	Throughput (PCU/hr)	End queue (PCU)	Delay (s)	Unsignalised level of service
B-C	0	651	0.000	0	0.0	0.000	A
B-A	0	480	0.000	0	0.0	0.000	A
C-AB	412	687	0.600	423	2.0	14.515	B
C-A	89			89			
A-B	390			390			
A-C	161			161			

18:00 - 18:15

Stream	Total Demand (PCU/hr)	Capacity (PCU/hr)	RFC	Throughput (PCU/hr)	End queue (PCU)	Delay (s)	Unsignalised level of service
B-C	0	662	0.000	0	0.0	0.000	A
B-A	0	513	0.000	0	0.0	0.000	A
C-AB	318	670	0.474	321	1.2	10.552	B
C-A	102			102			
A-B	327			327			
A-C	135			135			

2043, AM

Data Errors and Warnings

No errors or warnings

Junction Network

Junctions

Junction	Name	Junction type	Arm A Direction	Arm B Direction	Arm C Direction	Use circulating lanes	Junction Delay (s)	Junction LOS
1	untitled	T-Junction	Two-way	Exit Only	Two-way		3.63	A

Junction Network

Driving side	Lighting	Network residual capacity (%)	First arm reaching threshold	Network delay (s)	Network LOS
Left	Normal/unknown	26	Stream C-AB	3.63	A

Traffic Demand

Demand Set Details

ID	Scenario name	Time Period name	Traffic profile type	Start time (HH:mm)	Finish time (HH:mm)	Time segment length (min)
D3	2043	AM	ONE HOUR	07:45	09:15	15

Vehicle mix source	PCU Factor for a HV (PCU)
HV Percentages	2.00

Demand overview (Traffic)

Arm	Linked arm	Use O-D data	Average Demand (PCU/hr)	Scaling Factor (%)
A		✓	742	100.000
B		✓	0	100.000
C		✓	456	100.000

Origin-Destination Data

Demand (PCU/hr)

		To		
		A	B	C
From	A	0	482	260
	B	0	0	0
	C	247	209	0

Vehicle Mix

Heavy Vehicle Percentages

		To		
		A	B	C
From	A	0	0	2
	B	0	0	0
	C	2	0	0

Results

Results Summary for whole modelled period

Stream	Max RFC	Max Delay (s)	Max Queue (PCU)	Max LOS
B-C	0.00	0.00	0.0	A
B-A	0.00	0.00	0.0	A
C-AB	0.59	13.30	1.9	B
C-A				
A-B				
A-C				

Main Results for each time segment

07:45 - 08:00

Stream	Total Demand (PCU/hr)	Capacity (PCU/hr)	RFC	Throughput (PCU/hr)	End queue (PCU)	Delay (s)	Unsignalised level of service
B-C	0	646	0.000	0	0.0	0.000	A
B-A	0	521	0.000	0	0.0	0.000	A
C-AB	221	644	0.343	219	0.7	8.479	A
C-A	122			122			
A-B	363			363			
A-C	196			196			

08:00 - 08:15

Stream	Total Demand (PCU/hr)	Capacity (PCU/hr)	RFC	Throughput (PCU/hr)	End queue (PCU)	Delay (s)	Unsignalised level of service
B-C	0	632	0.000	0	0.0	0.000	A
B-A	0	491	0.000	0	0.0	0.000	A
C-AB	286	653	0.437	284	1.0	9.828	A
C-A	124			124			
A-B	433			433			
A-C	234			234			

08:15 - 08:30

Stream	Total Demand (PCU/hr)	Capacity (PCU/hr)	RFC	Throughput (PCU/hr)	End queue (PCU)	Delay (s)	Unsignalised level of service
B-C	0	613	0.000	0	0.0	0.000	A
B-A	0	450	0.000	0	0.0	0.000	A
C-AB	391	667	0.586	387	1.9	12.972	B
C-A	111			111			
A-B	531			531			
A-C	286			286			

08:30 - 08:45

Stream	Total Demand (PCU/hr)	Capacity (PCU/hr)	RFC	Throughput (PCU/hr)	End queue (PCU)	Delay (s)	Unsignalised level of service
B-C	0	613	0.000	0	0.0	0.000	A
B-A	0	449	0.000	0	0.0	0.000	A
C-AB	392	668	0.587	392	1.9	13.300	B
C-A	110			110			
A-B	531			531			
A-C	286			286			

08:45 - 09:00

Stream	Total Demand (PCU/hr)	Capacity (PCU/hr)	RFC	Throughput (PCU/hr)	End queue (PCU)	Delay (s)	Unsignalised level of service
B-C	0	632	0.000	0	0.0	0.000	A
B-A	0	490	0.000	0	0.0	0.000	A
C-AB	287	655	0.439	291	1.1	10.105	B
C-A	123			123			
A-B	433			433			
A-C	234			234			

09:00 - 09:15

Stream	Total Demand (PCU/hr)	Capacity (PCU/hr)	RFC	Throughput (PCU/hr)	End queue (PCU)	Delay (s)	Unsignalised level of service
B-C	0	646	0.000	0	0.0	0.000	A
B-A	0	519	0.000	0	0.0	0.000	A
C-AB	222	645	0.345	224	0.7	8.658	A
C-A	121			121			
A-B	363			363			
A-C	196			196			

2043, PM

Data Errors and Warnings

No errors or warnings

Junction Network

Junctions

Junction	Name	Junction type	Arm A Direction	Arm B Direction	Arm C Direction	Use circulating lanes	Junction Delay (s)	Junction LOS
1	untitled	T-Junction	Two-way	Exit Only	Two-way		11.96	B

Junction Network

Driving side	Lighting	Network residual capacity (%)	First arm reaching threshold	Network delay (s)	Network LOS
Left	Normal/unknown	2	Stream C-AB	11.96	B

Traffic Demand

Demand Set Details

ID	Scenario name	Time Period name	Traffic profile type	Start time (HH:mm)	Finish time (HH:mm)	Time segment length (min)
D4	2043	PM	ONE HOUR	16:45	18:15	15

Vehicle mix source	PCU Factor for a HV (PCU)
HV Percentages	2.00

Demand overview (Traffic)

Arm	Linked arm	Use O-D data	Average Demand (PCU/hr)	Scaling Factor (%)
A		✓	634	100.000
B		✓	0	100.000
C		✓	572	100.000

Origin-Destination Data

Demand (PCU/hr)

		To		
		A	B	C
From	A	0	449	185
	B	0	0	0
	C	271	301	0

Vehicle Mix

Heavy Vehicle Percentages

		To		
		A	B	C
From	A	0	0	2
	B	0	0	0
	C	2	0	0

Results

Results Summary for whole modelled period

Stream	Max RFC	Max Delay (s)	Max Queue (PCU)	Max LOS
B-C	0.00	0.00	0.0	A
B-A	0.00	0.00	0.0	A
C-AB	0.82	29.73	5.7	D
C-A				
A-B				
A-C				

Main Results for each time segment

16:45 - 17:00

Stream	Total Demand (PCU/hr)	Capacity (PCU/hr)	RFC	Throughput (PCU/hr)	End queue (PCU)	Delay (s)	Unsignalised level of service
B-C	0	660	0.000	0	0.0	0.000	A
B-A	0	511	0.000	0	0.0	0.000	A
C-AB	326	670	0.486	321	1.2	10.303	B
C-A	105			105			
A-B	338			338			
A-C	139			139			

17:00 - 17:15

Stream	Total Demand (PCU/hr)	Capacity (PCU/hr)	RFC	Throughput (PCU/hr)	End queue (PCU)	Delay (s)	Unsignalised level of service
B-C	0	649	0.000	0	0.0	0.000	A
B-A	0	479	0.000	0	0.0	0.000	A
C-AB	422	685	0.617	419	2.0	13.632	B
C-A	92			92			
A-B	404			404			
A-C	166			166			

17:15 - 17:30

Stream	Total Demand (PCU/hr)	Capacity (PCU/hr)	RFC	Throughput (PCU/hr)	End queue (PCU)	Delay (s)	Unsignalised level of service
B-C	0	634	0.000	0	0.0	0.000	A
B-A	0	435	0.000	0	0.0	0.000	A
C-AB	580	706	0.821	567	5.2	25.493	D
C-A	50			50			
A-B	494			494			
A-C	204			204			

17:30 - 17:45

Stream	Total Demand (PCU/hr)	Capacity (PCU/hr)	RFC	Throughput (PCU/hr)	End queue (PCU)	Delay (s)	Unsignalised level of service
B-C	0	634	0.000	0	0.0	0.000	A
B-A	0	432	0.000	0	0.0	0.000	A
C-AB	586	710	0.825	584	5.7	29.735	D
C-A	44			44			
A-B	494			494			
A-C	204			204			

17:45 - 18:00

Stream	Total Demand (PCU/hr)	Capacity (PCU/hr)	RFC	Throughput (PCU/hr)	End queue (PCU)	Delay (s)	Unsignalised level of service
B-C	0	649	0.000	0	0.0	0.000	A
B-A	0	475	0.000	0	0.0	0.000	A
C-AB	429	691	0.620	442	2.2	15.617	C
C-A	86			86			
A-B	404			404			
A-C	166			166			

18:00 - 18:15

Stream	Total Demand (PCU/hr)	Capacity (PCU/hr)	RFC	Throughput (PCU/hr)	End queue (PCU)	Delay (s)	Unsignalised level of service
B-C	0	660	0.000	0	0.0	0.000	A
B-A	0	509	0.000	0	0.0	0.000	A
C-AB	329	672	0.489	333	1.2	10.859	B
C-A	102			102			
A-B	338			338			
A-C	139			139			

APPENDIX L

DMURS Statement of Consistency Report

consulting engineers

NRB

DMURS Design Compliance Statement Technical Note

For

Proposed Large Scale Residential Development (LRD)

at

Kilnahue, Gorey, Co. Wexford.

SUBMISSION ISSUE

5th Floor, 40 Mespil Road, Dublin 4
Tel/fax: +353 1 292 1941, E-mail: info@nrb.ie, Web: www.nrb.ie
Registered in Ireland No. 491679

1.0 INTRODUCTION

1.1 It is NRB's opinion that the proposed residential development is consistent with both the principles and guidance outlined within the *Design Manual for Urban Roads and Streets* (DMURS) 2013 as amended in 2019. The scheme proposals are the outcome of an integrated design approach by the entire Design Team, to address the integration of the residential development into this area. This approach sought to implement a sustainable community connected by well-designed links, layout and accesses - which combined deliver attractive, convenient and safe access in addition to promoting modal shift and viable alternatives to car based journeys.

1.2 The following section discusses design features which are incorporated within the proposed residential scheme with the objective of delivering a design that is consistent with the principles of DMURS.

2.0 DESIGN ATTRIBUTES

2.1 The proposed layout strategy seeks to maximise connectivity between key local destinations through the provision of a high level of **permeability and legibility** for all journeys, particularly for sustainable forms of travel (cycling and walking). The proposed residential development delivers greater mode & route choices along direct, attractive and safe linkages to local amenities and schools/service destinations.

2.2 High Quality Connections link the development and the local roads. The external perimeter setting itself been designed to deliver a hierarchy which provides safe access within / across the proposed new residential community. The external perimeter design serves to link the site & community with the established local road network. Safe well-designed routes are provided for pedestrians and for cyclists, with easy access to Gorey and the surrounding local areas.

2.3 As part of the development, the movement function is designed to respect the different levels of motorised traffic whilst optimising access to/from alternative transport and catering for higher number of pedestrians & cyclists. In parallel, the adopted design philosophy has sought to consider the context / place status of the scheme in terms of level of connectivity provided, the quality of the proposed design, the level of pedestrian / cyclists activity and vulnerable users requirements, whilst also identifying appropriate

'transition' solutions particularly internally and at the main intersection at the R725 Carnew Road and the L10112 Kilnahue Lane.

2.4 The layout of the proposed development seeks to maximise permeability and enhances legibility, and the design of appropriately sized blocks actively contributes to a highly permeable and accessible community for both pedestrians and cyclists.

2.5 The proposed layout seeks to successfully create an appropriate balance between the functional requirements of different network users whilst enhancing the 'sense of place'. Design attributes of the proposed layout which contribute to achieving this ***DMURS objective*** include:

a) *Entrance Treatments and Raised Tables at Site Access Junctions*
Each of the three site access junctions incorporates **raised table crossings** to reduce vehicle entry speeds and enhance pedestrian priority. This design approach aligns with **DMURS Section 4.4.3**, which recommends entry treatments and vertical deflection to create gateway features and signal a transition from the external road network to a low-speed, residential environment.

b) *Internal Traffic-Calmed Streets and Pedestrian/Cycle Connectivity*
The internal street network has been designed as a **connected and legible layout**, with traffic-calming measures and **dedicated pedestrian and cycle facilities** linking directly to the external network. This reflects **DMURS Key Principle 2 – Connectivity**, which promotes direct and safe routes for sustainable travel modes.

c) *Narrowed Carriageways to Reduce Vehicle Speeds*
The main access road is designed as a **6.0m carriageway**, with secondary streets at **5.5m width**, consistent with **DMURS Section 4.2.4**, which supports narrower carriageways to moderate speeds, reinforce driver caution, and enhance pedestrian comfort.

d) *Raised Tables Throughout the Internal Network*
Raised tables are provided at key junctions and pedestrian crossing points, encouraging lower vehicle speeds and creating level crossing points for pedestrians. This approach is consistent with **DMURS Section 4.4.2**, promoting design solutions that reduce dominance of vehicles and prioritise pedestrian movement.

e) *Junction Offsets and Alignment Changes*

Staggered junctions and subtle horizontal deflections are integrated throughout the network to visually and physically calm traffic, in accordance with **DMURS Section 4.4.4**, which encourages varied alignment to maintain driver awareness and reduce straight, speed-inducing sightlines.

f) *Strategic Use of Speed Cushions*

Selective use of speed cushions provides additional speed control on longer, straight internal roads. Such measures comply with **DMURS Section 4.4.3**, where vertical deflection is recognised as an effective method of achieving target design speeds below 30 km/h.

g) *30 km/h Speed Limit Zone*

The internal street network will operate under a **30 km/h design speed limit**, with appropriate gateway signage at access points. This is consistent with **DMURS Section 4.2.2**, which advocates for low-speed environments in residential areas to enhance safety and encourage active travel.

h) *Home Zones and Shared Spaces*

Cul-de-sacs will incorporate **4.8m wide shared "home zone" streets** operating under a **20 km/h speed environment**, consistent with **DMURS Section 4.2.3**. These shared spaces prioritise pedestrians and cyclists while allowing limited vehicular access, reinforcing the "place" function of the street.

i) *Shared Pedestrian and Cycle Route along Kilnahue Lane*

A **4.0m wide shared pedestrian/cycle path** is proposed parallel to Kilnahue Lane, linking to the existing facilities adjacent to the local schools via a raised crossing. This supports **DMURS Principle 1 – Streets as Places**, ensuring continuous and safe connections to local trip attractors such as schools and community amenities.

j) *Permeable and Well-Connected Layout*

The internal layout provides a **permeable and legible network**, with multiple route choices for pedestrians and cyclists connecting to external footpaths and cycleways. This aligns with **DMURS Principle 2 – Connectivity**, ensuring integration with the wider Gorey active travel network.

k) *Footpath Provision and Connectivity*

Footpaths of **minimum 2.0 m width** will be provided throughout the development, ensuring universal access and continuous connections to the existing external pedestrian network. This meets **DMURS Section 4.3.2**, which recommends generous and direct pedestrian facilities.

l) *Minimisation of Signage and Markings*

Signage and road markings will be **kept to a minimum** to avoid visual clutter, used only at key nodes and transition areas. This reflects **DMURS Section 3.3.1**, which promotes simplicity in design and streetscapes that are self-regulating through form rather than excessive signage.

m) *Visibility Splays*

All junctions and access points provide **unobstructed visibility splays** in accordance with **DMURS Table 4.2**, ensuring safe sightlines consistent with low-speed design parameters and residential road classifications.

n) *Pedestrian Crossing Facilities*

Frequent and well-designed crossing points will be provided along key desire lines with **flush kerbing** and level surfaces, consistent with **DMURS Section 4.3.3**, ensuring pedestrian priority and universal accessibility.

o) *Tight Corner Radii*

Junction corner radii are limited to **3 m or less** where feasible, to reduce vehicle turning speeds and shorten crossing distances. This reflects **DMURS Section 4.4.5**, which recommends tighter radii in residential contexts to promote pedestrian safety.

p) *Kerb Heights and Edge Treatments*

Where upstand kerbs are required, these will be **limited to approximately 60 mm**, in accordance with **DMURS Section 4.3.4**, ensuring easy pedestrian movement and visual continuity between carriageway and footpath.

q) *Shared Carriageways for Cyclists*

In line with the **National Cycle Manual (NCM)** and **DMURS Section 4.3.7**, cyclists will share the carriageway within the development where vehicle speeds and volumes are low, promoting integration rather than segregation in a residential context.

r) *Traffic Signs and Road Markings*

All street signage and markings will comply with the **Department of Transport's Traffic Signs Manual**, with details agreed with Wexford County Council. Placement will be sensitive to the local context, supporting DMURS' principles of legibility and minimal visual intrusion.

APPENDIX M

Planning Stage
Construction Traffic Management Plan

consulting engineers

NRB

Construction Traffic Management Plan

For

Proposed Large Scale Residential Development (LRD)

At

Kilnahue, Gorey, Co. Wexford.

Planning Stage

5th Floor, 40 Mespil Road, Dublin 4, D04 C2N4
Tel: +353 1 292 1941, E-mail: info@nrb.ie, Web: www.nrb.ie

Registered in Ireland No. 491679

1.0 INTRODUCTION

This Preliminary Construction Traffic Management Plan includes a description of the proposed construction works and how traffic will be managed for the duration of the construction works on site. The methodology set out in this report, follows the methodology as will be set out in the Site Specific Construction Stage Traffic Management Plan which will be prepared and submitted when a Contractor is appointed for the works, in the event of a Grant of Planning Permission.

When the contractor is appointed to undertake any site clearance and works, they will prepare a detailed method statement having regard to their own operating procedures, the agreed construction programme, site conditions, and any relevant planning conditions that WCC may apply in the event of a grant of planning permission.

In addition to the Contractors Construction Stage Management Plan, any works on the public road (e.g. for services connections) will require an application for a Road Opening Licence and will be submitted by the contractor to the Local Authority. Any such application will include a full detailed Construction Traffic Management Plan prepared in accordance with Chapter 8 of the Traffic Signs Manual for pre-approval by the Local Authority. This CTMP Report can be considered Preliminary or Outline in these terms.

It should be noted that the issues covered within this document are preliminary in nature and may be amended or added to by the appointed contractor for the works.

2.0 PROJECT DESCRIPTION

The proposed development consists of the construction of a Large-Scale Residential Development (LRD) comprising of the construction of 349 no. houses and 64 no. apartments - including 134 no. 2-bedroom houses, 176 no. 3-bedroom houses; 39 no. 4-bedroom houses; 36 no. 1-bedroom apartments / maisonettes; 28 no. 3-bedroom apartments. The scheme includes an ancillary creche and community room. Access to the proposed development will be provided via the main vehicular access from the 60km/hr section of the Carnew Road (R725) and two accessed from the L10112 Kilnahue Lane.

A site location plan is included below as ***Figure 2.1*** for ease of reference.

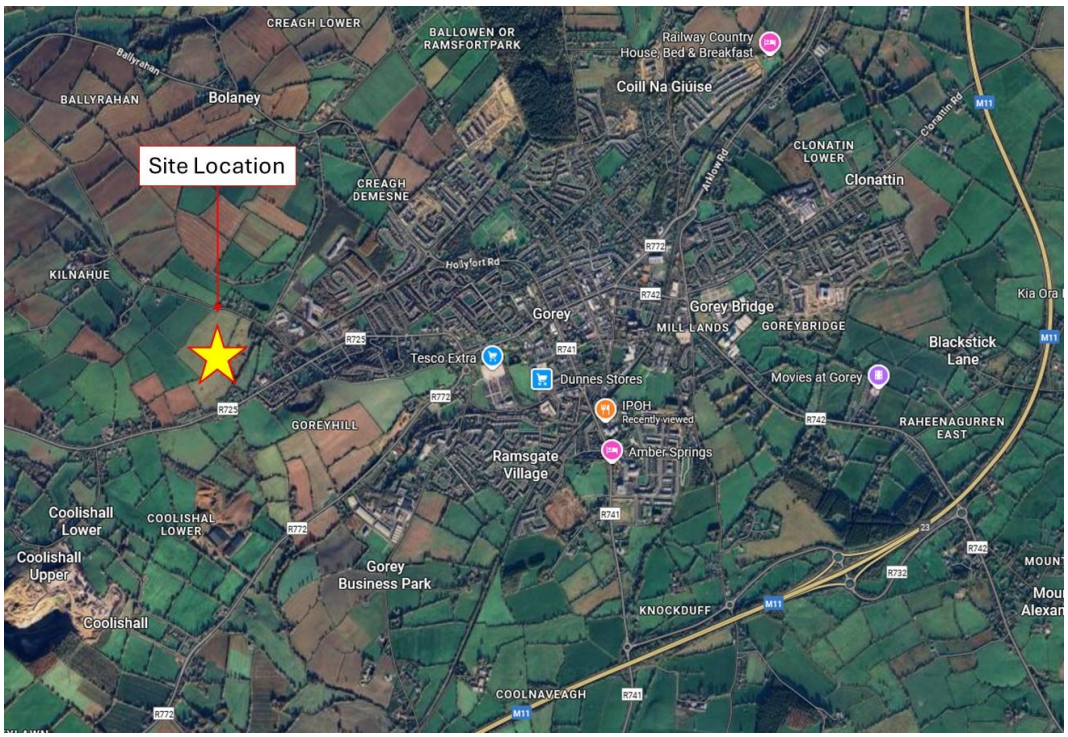

Figure 2.1 – Site Location Plan

The main proposed vehicular access to the site is from the R725 Regional Road (Carnew Road), within the 60km/h speed limit, at a point where there are high quality sight distances available. A *Google Streetview* image showing the nature and proportions of the R725 at the existing field / site is included below as ***Figure 2.2*** for ease of reference.



Figure 2.2 – R725 Carnew Road at the Site (View from West – Google Maps)

3.0 CONSTRUCTION PHASING & PROGRAMME

It is anticipated that the proposed development will be constructed in specific phases, with a 48-month programme.

The construction works associated with the development will be undertaken in four phases (1 - 4). There will also be excavation phases associated with excavating for site services, along with reprofiling of soil on site. The proposed phasing plan can be seen in Figure 3.1 below.

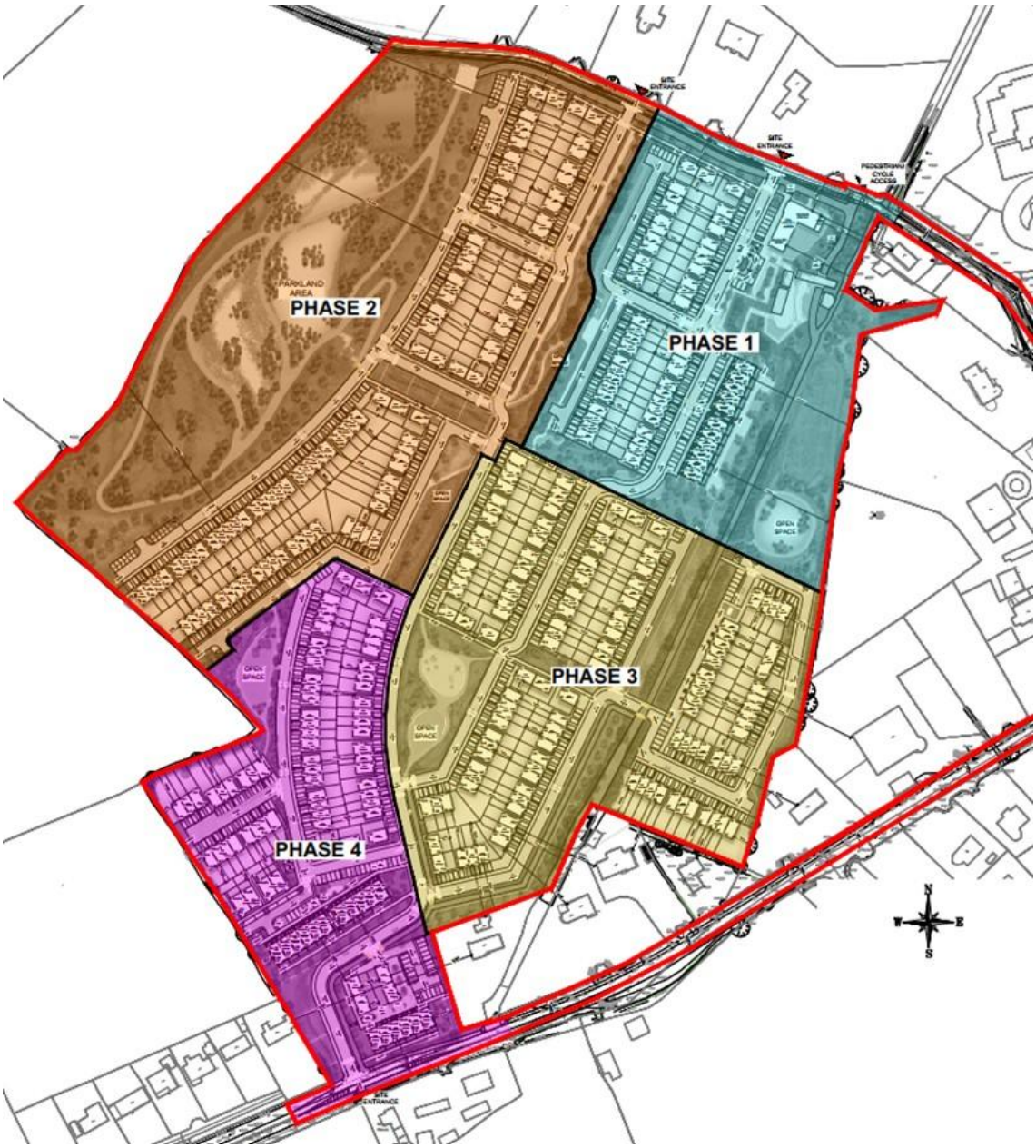

Figure 3.1 – Proposed Phasing

4.0 SITE ESTABLISHMENT

The first activity to be carried out at the site will be the establishment of site facilities and security. It is anticipated that site establishment works will take approximately four weeks. The site office and welfare facilities will be confirmed in advance of the commencement of site works and agreed with Wexford County Council. ***Figure 4.1*** shows the proposed locations of the site compound and staff parking.

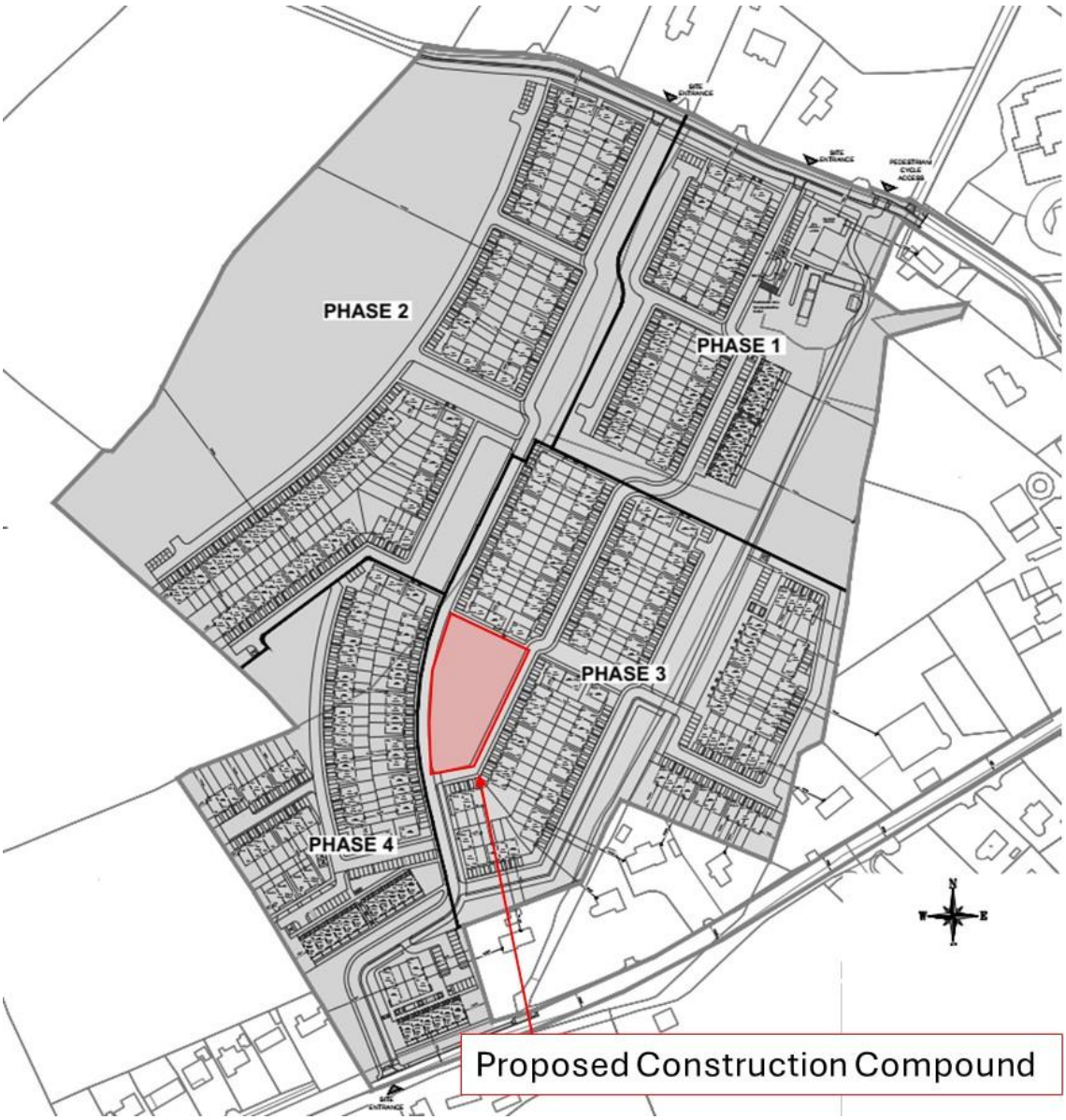

Figure 4.1 – Location of Construction Compound

5.0 PERIMETER HOARDING

Perimeter hoarding will be provided around the entire site to provide a barrier against unauthorised access from public areas. All areas of construction will be fenced / hoarded off to prevent unauthorized access. This fencing shall remain closed at all times during construction works and closed and locked after construction work hours / break times.

This fencing shall be erected in accordance with good practice and the Construction Regulations 2013. Fencing arrangements shall be reviewed as the life of the project progresses.

Access/Egress to site for site operatives and visitors shall be via biometric gates. Site security fencing/ Hoarding up to a height of 2.4 M will be erected in line with the Construction Regulations 2013 that will clearly separate the work site from the surrounding public. It is not envisaged that the fencing will impinge upon the safe passage of pedestrians during the construction phase.

6.0 CONSTRUCTION TRAFFIC MANAGEMENT ARRANGEMENTS

Site Access

As identified above it is intended that the proposed main site access to the R725 will be the point of access for all construction related vehicles in advance of construction of the permanent estate access.

Loading, Unloading and Storage of Materials

The temporary parking of staff or delivery vehicles will not be permitted on the R725 or any nearby public road – but there is clearly generous space available internally within the site itself to accommodate storage parking, deliveries etc. A dedicated internal compound will be constructed as part of the early works to accommodate construction vehicles and loading, unloading and storage as necessary.

Access to the site will be controlled and a security operative in a high-visibility jacket can be designated to assist construction vehicles to enter/exit the site at busy times. Unfettered and unobstructed access on the R725 for public road traffic will be maintained at all times.

Construction Traffic Routing

The proposed construction vehicle routes for the site will require a traffic management plan to be agreed upon with WCC and TII prior to site workings beginning. Two-way traffic will be maintained throughout the project.

All construction traffic will be required to use the primary roads in the vicinity of the site.

The route for any HGVs will depend on the location from where concrete & other materials will be sourced and the end destination for excavation materials not reused on site. The locations of selected concrete batching plants and suitable waste recovery/waste disposal facilities have yet to be determined and will be identified when the contractor is appointed and when more detail on the material to be handled becomes available.

Although none are envisaged at this stage, the routes for any oversized construction vehicles required will be agreed with the Local Authority before commencement of works on site.

Construction Parking

Given the scale overall site, accommodating the parking requirements for construction operations with the site in this case will not present a challenge. There will be no parking allowed on the R725 Regional Road. All of the sub-contractors as well as the main contractor and project managers will occupy offices within the construction compounds. The site parking for all staff, contractors and visitors will also be located in this area.

Vehicle Movement During Construction

Excavated/demolished material will be removed off-site for recovery at an authorised facility in accordance with the waste hierarchy and relevant waste legislation. Transportation of the material will be by licensed hauliers. It is expected that there will be minimal and unnoticeable impact on the local roads.

Surplus excavated materials if any will be removed off-site for recovery at an authorised facility in accordance with the waste hierarchy and relevant waste legislation. Transportation of the material will be by licensed hauliers. There will be minimal impact on the local roads, and it will likely pass unnoticed.

It is anticipated that there will not be any significant concentration of large vehicle movements as no significant concrete pour works / bulk excavations or similar are envisaged.

Excavations and surveys will be carried out to establish the location of any potential underground services. Any existing piped or cabled underground services will be verified on site and will be made safe within the boundary of the site.

7.0 MAINTENANCE / CLEANLINESS OF PUBLIC ROADS

The wheel checking and cleaning facility provided will ensure that no debris or dirt will be deposited outside the site. In the unlikely event of any solid waste being deposited on the public roads or road gullies any such waste will be removed and disposed of immediately. In the event of unintentional damage to road markings or road signage, these will be remediated to the satisfaction of the WCC.

8.0 CONSTRUCTION SITE WARNING SIGNAGE

Site Entrance Ahead Signage will be provided on the approaches to the site on the R725. The temporary signage used will be in accordance with Chapter 8 of the DTTAS Traffic Signs Manual, located 100m either side of the works access point on the R725. For a Regional Road of this nature only 1 sign on each approach is required under Chapter 8 requirements.



Figure 8.1 – Sign WK052 (DTTAS Traffic Signs Manual)

9.0 CONSTRUCTION WASTE MANAGEMENT / PLAN

A separate specific Waste Management Plan has been prepared as part of this application. Consistent with best practice, it is proposed to segregate waste materials generated with a range of recycling skips.

Where the on-site segregation of certain waste types is not possible, segregation will be done off-site. All skips leaving the site will be covered and enclosed to prevent waste materials from falling out. A contract will be agreed with a licensed Waste Management Contractor so that they will collect full skips in a timely manner once they are filled and

replaced with empty skips. All waste will be handled by an approved waste contractor holding a current waste collection permit.

Any waste requiring disposal off-site will be reused, recycled, recovered or disposed of at a facility holding the appropriate registration, permit or licence, as required. Written records will be maintained on site detailing the waste arising throughout the construction phases, the classification of each waste type, waste collection permits for all waste contractors who collect waste from the site and permit or licence for the waste facility receiving the waste removed from site

All efforts will be made to reuse all soil on-site, but where excess topsoil and/or sub-soil arises and where suitable it will be treated as 'By-product' with its exportation from site done under Article 27. Where need arises (there is a soil deficit on-site), and where it is suitable, imported soil (topsoil and/or sub-soil) will be imported as 'By-Product', under Article 27."

10.0 CONTROL OF NOISE

Noise levels will comply with the requirements of BS 5228-1:2009+A1:2014 and BS 5228-2:2009+A1:2014 (Code of Practice for Noise and Vibration Control on Construction and Open Sites) as well as Safety, Health and Welfare at Work (General Application) Regulations 2007, Part 5 Noise and Vibration.

Notwithstanding, the following practices will be implemented:

- Establish channels of communication between the contractor, the Client and local residents
- Appoint a site representative responsible for matters relating to noise i.e. a Local contact from within the site staff who can maintain a log on site for any and all noise complaints
- Limit the hours during which site activities that are likely to create high levels of noise and vibration are permitted
- Selection of plant with low inherent potential for generation of noise
- Siting of noisy plant as far away from sensitive properties as permitted by site constraints and implementation of noise reduction measures such as acoustic enclosures
- Avoid unnecessary revving of engines and switch off plant when idle
- All vehicles and mechanical plant used for the purpose of the Works shall be fitted with effective exhaust silencers and shall be maintained in good and efficient working order. In addition, all diesel engine powered plant shall be fitted with effective air intake silencers.

- All ancillary pneumatic percussive tools shall be fitted with mufflers or silences of the type recommended by the manufacturers, and where commercially available, dampened tools and accessories shall be used.

11.0 AIR QUALITY

The primary air quality impact during construction relates to nuisance dust emissions. The contractor will ensure that any dust caused by the construction activities will be kept to a minimum as required under any relevant planning condition. Dust generated from construction operations will be controlled by water spray where required.

Monitoring of dust deposition levels (via the Bergerhoff method) can take place at a number of locations at the site boundary of the proposed development to ensure that dust nuisance is not occurring at nearby sensitive receptors. This monitoring aims to ensure that the dust mitigation measures outlined above remain effective.

The following dust suppression practices are to be implemented during the construction phase:

- Hard surface roads will be swept to remove mud and aggregate materials from their surface while any un-surfaced roads will be restricted to essential site traffic
- Any road that has the potential to give rise to fugitive dust must be regularly watered, as appropriate, during dry and/or windy conditions
- Public roads on the R725 outside the site will be inspected on a daily basis for cleanliness and cleaned as necessary
- Vehicles exiting the site shall make use of vehicle washing equipment where appropriate prior to entering onto public roads
- Material handling systems and site stockpiling of materials will be designed and laid out to minimise exposure to wind. Water misting or sprays will be used as required if particularly dusty activities are necessary during dry or windy periods
- Dust suppression equipment shall be used on drilling and cutting machines,
- All loaded vehicles will be adequately covered before entering/leaving the site,
- Use of off-site fabrication to minimise dust generation on site.

12.0 MITIGATION MEASURES

Construction impacts will be minimised through:

- Consolidation of delivery loads to/from the site and managing larger deliveries to occur outside peak periods,

- Advising all Construction Vehicles of the allocated route for vehicles,
- Use of precast/prefabricated materials where possible,
- A dedicated compound constructed internally as part of the early works to accommodate construction vehicles and safe loading / unloading and storage as necessary.
- Examination of exiting vehicles and wheel wash facilities to ensure that roads are not affected by dirt from on-site activities.
- Advisory / Warning Signage on the R725 in accordance with Chapter 8 of the DTTAS Traffic Signs Manual, as illustrated above.

It is proposed that the site and building works required to implement the development shall only be carried out between the hours of:

- Mondays to Fridays - 08.00 to 18.00
- 08.00 – 13.00 on Saturdays
- Emergency work only outside of these hours, unless agreed with WCC.

The Contractor will adhere to best practice mobility management measures for the site staff to encourage access to the site by means other than single car driver.

APPENDIX N

Independent Stage 1 Road Safety Audit
(*Including Designer Feedback Form*)

Title: **Stage 1 Road Safety Audit and**

DMURS Quality Audit,

For;

Proposed Large Residential Development Kilnahue, Gorey, Co. Wexford.

Client: **NRB Consulting Engineers**

Date: **November 2025**

Report reference: **2907R01**

VERSION: **FINAL (28-11-2025)**

Prepared By:

Bruton Consulting Engineers Ltd

Glaspistol
Clogherhead
Drogheda
Co. Louth.

Tel: 041 9881456
Mob: 086 8067075
E: admin@brutonceng.ie
W: www.brutonceng.ie

CONTENTS SHEET

Contents

1.0 Introduction 2
2.0 Background 3
3.0 Issues Common to More Audits than RSA 4
4.0 Items Raised in This Stage 1 Road Safety Audit. 5
4.1 Problem 5
4.2 Problem 6
4.3 Problem 7
4.4 Problem 7
4.5 Problem 8
4.6 Problem 9
4.7 Problem 10
4.8 Problem 11
5.0 Items Raised in This Stage 1 Quality Audit – Accessibility Audit. 12
5.1 Issue 12
5.2 Issue 13
5.3 Issue 14
6.0 Items Raised in This Stage 1 Quality Audit – Walking Audit. 15
6.1 Issue 15
7.0 Items Raised in This Stage 1 Quality Audit – Cycling Audit. 16
7.1 Issue 16
8.0 Audit Statements. 17
Road Safety Audit Statement 17
Quality Audit Statement 17
Appendix A 18
Appendix B 19
Appendix C 24

© Bruton Consulting Engineers Ltd 2025

1.0 Introduction

This report was prepared in response to a request from Brian Mc Mahon, NRB Consulting Engineers Ltd, for a Stage 1 Road Safety Audit and a DMURS Quality Audit for a proposed large residential scheme in Kilnahue, Gorey, Co. Wexford.

The Audit Team comprised of;

Team Leader: **Norman Bruton**, BE CEng FIEI, Cert Comp RSA.

TII Auditor Approval no. NB 168446

Team Member: **Owen O'Reilly**, B.SC. Eng Dip Struct. Eng NCEA Civil Dip Civil. Eng CEng MIEI

TII Auditor Approval no. OO1291756

The Audits involved the examination of drawings and other material provided and a site visit by both audit team members, together, on the 5th of November 2025. The weather at the time of the site visit was wet and the road surface was also wet.

The Stage 1 Road Safety Audit has been carried out in accordance with the requirements of TII Publication Number GE-STY-01024, dated May 2025.

The Quality Audit has been carried out in accordance with the guidance in the Design Manual for Urban Roads and Streets (DMURS), produced by Department of Transport Tourism and Sport in March 2013 and as updated in June 2019 including Advice Notes. The Quality Audit is composed of a number of distinct audits which include an Accessibility Audit, a Walking Audit and a Cycling Audit (i.e. aspects of a Quality Audit carried out independent of the Design Team.

Many issues raised in the Road Safety Audit would also be raised in the various aspects of the Quality Audit, however to avoid repetition items that are common to more than the Road Safety Audit have been included in a table at the start of Section 3.0 of this report.

The scheme has been examined and this report compiled in respect of the consideration of those matters that have an adverse effect on road safety. It has not been examined or verified for compliance with any other standards or criteria. The problems identified in this report are considered to require action in order to improve the safety of the scheme for road users.

If any of the recommendations within these audits are not accepted, a written response is required, stating reasons for non-acceptance. Comments made within the report under the heading of Observation are intended to be for information only. Written responses to Observations are not required.

The information supplied to the Audit Team is listed in **Appendix A.** The feedback form is contained in **Appendix B.** A plan drawing showing the problem locations is contained in **Appendix C**.

2.0 Background

It is proposed to construct a large scale residential (413 units) development (LRD) including creche at Kilnahue, Co. Wexford. Three vehicular accesses are proposed , one of the Carnew Road R725 and two off the L10112, Kilnahue Lane.

The proposed access off the R725 is to have a right turning lane/pocket. It is located at the interface of the 60km/hr and 80km/hr speed limit zones.

The Opinion from Wexford County Council sought the signalisation of the R725/Kilnahue Lane junction. The Design Team have suggested that it is not a suitable junction to be signalised.

Many other aspects of the Opinion have been included in the drawings that form the basis of this Audit.

The site location is provided below.



Image courtesy of Google Maps.

3.0 Issues Common to More Audits than RSA

Below is a summary table of problems raised in the Road Safety Audit that would also be raised in the Quality Audit however are not repeated for clarity and brevity.

Problem Reference	Road Safety Audit	Access Audit	Walking Audit	Cycling Audit
4.1	✓	✓	✓	✓
4.2	✓			
4.3	✓	✓		✓
4.4	✓		✓	✓
4.5	✓		✓	✓
4.6	✓			
4.7	✓		✓	✓
4.8	✓			

4.0 Items Raised in This Stage 1 Road Safety Audit.

4.1 Problem

LOCATION

Drawing NRB-TA-001, R725 access.

PROBLEM

The R725 access is located at the interface of the 60km/hr and 80km/hr zones This is only defined by a speed limit sign without other features to alert drivers that they are entering an urban area. There is a risk that vehicles travelling inbound will be travelling at relatively high speed and may collide with crossing cyclists or vehicles.



RECOMMENDATION

It is recommended that a gateway be provided on the R725 along with transition zone features to calm traffic.

4.2 Problem

LOCATION

Drawing NRB-TA-007, R725 access.

PROBLEM

The proposed access junction on the R725 is close to the 80km/hr zone. There is a risk that drivers exiting the development will not have sufficient visibility to the left due to boundary hedging. This could lead to side-impact or rear-end collisions.

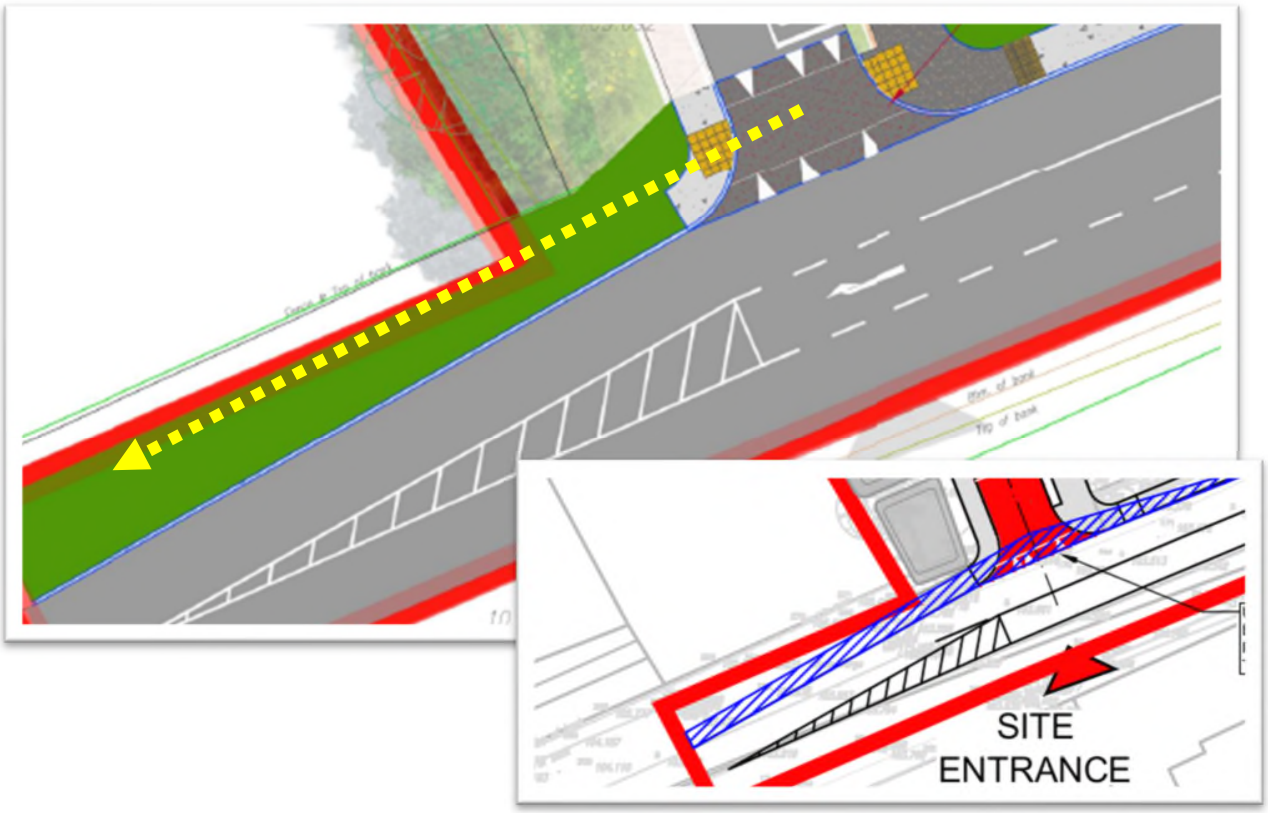

RECOMMENDATION

It is recommended that suitable visibility be provided based on the operational speed of the R725.

4.3 Problem

LOCATION

Drawing NRB-TA-007, R725 access.

PROBLEM

There is a proposed internal shared use cycle track leading to the R725 junction. There are no facilities for cyclists to cross the R725 to access the facility. This could lead to collisions with cyclists as they wait to turn right or turn left out of the development.

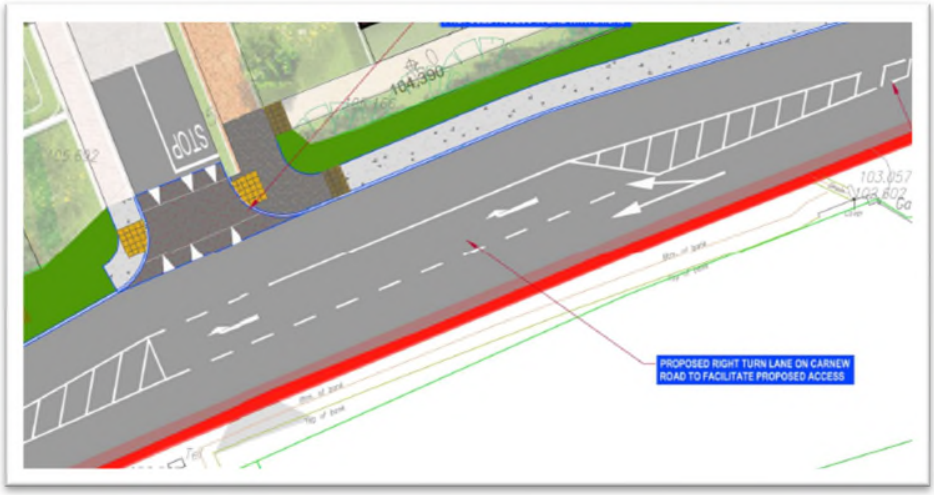

RECOMMENDATION

It is recommended that a jug-turn or similar be provided for cyclists in the southern verge.

4.4 Problem

LOCATION

Drawing NRB-TA-007

PROBLEM

The existing public lighting on the R725 only extends to the end of existing footpath. There is a risk that pedestrians will not be seen at night by drivers at the extended footpath which would increase the likelihood of collisions.

RECOMMENDATION

It is recommended that the R725 be lit as far as the scheme extents.

© Bruton Consulting Engineers Ltd 2025

4.5 Problem

LOCATION

Drawing NRB-TA-004, Zebra crossing.

PROBLEM

It is proposed to provide a zebra crossing on Killnahue Lane. It is unclear if drivers approaching from the School side will have sufficient stopping sight distance to a pedestrian or cyclist about to cross from the development side. A lack of visibility could lead to overrun of the crossing and collisions with those vulnerable road users.

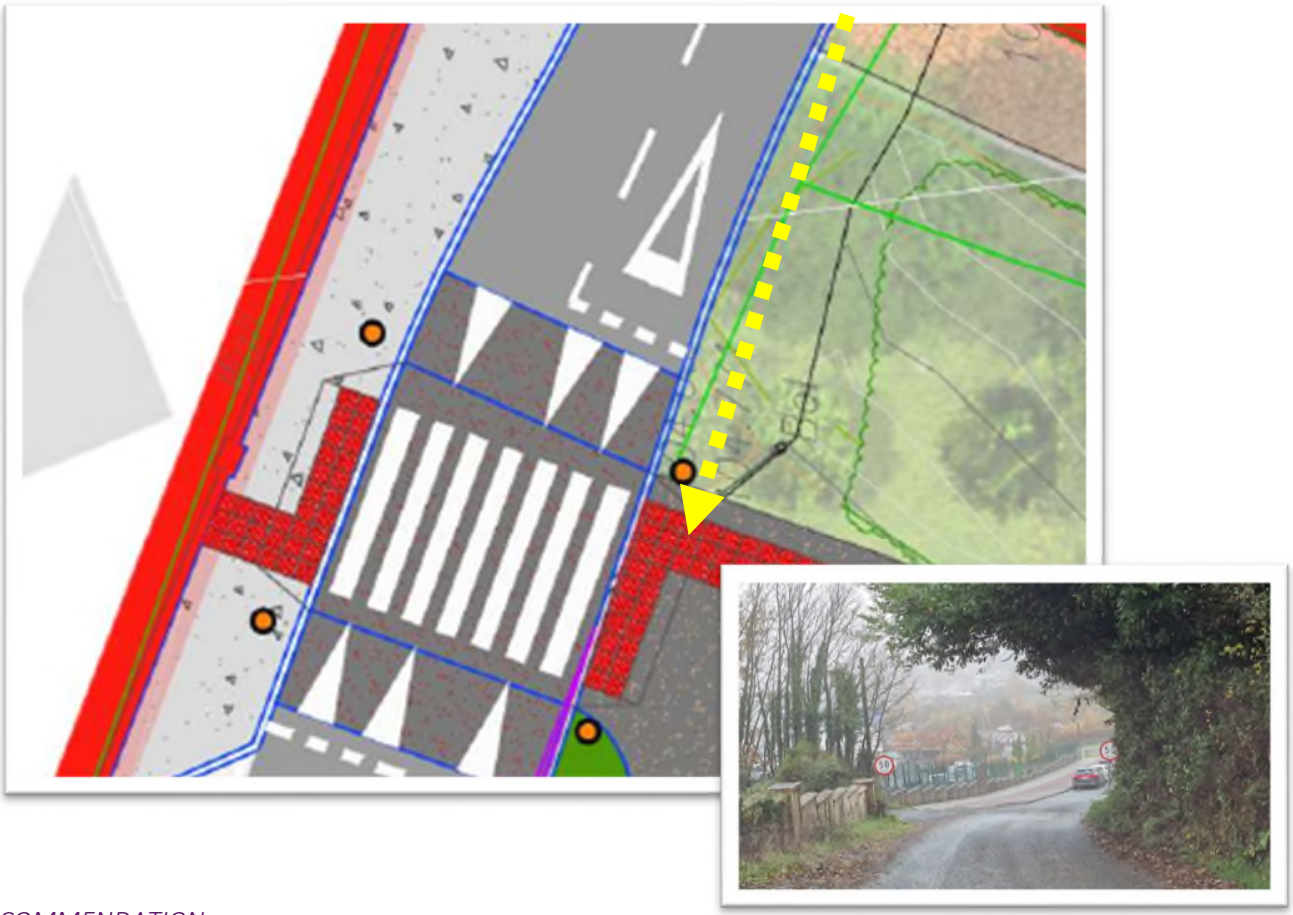

RECOMMENDATION

It is recommended that suitable stopping sight distance be provided.

4.6 Problem

LOCATION

Killnahue Lane.

PROBLEM

It was observed during the site visit that parents park on Killnahue Lane at school collection time. Drivers travelling towards the R725 have to travel in the opposite side of the carriageway which could lead to head-on collisions due to a lack of forward visibility given the roadside hedge.



RECOMMENDATION

It is recommended that measures be agreed with the school authorities to prohibit parking along this section of Killnahue Lane.

4.7 Problem

LOCATION

Turning heads.

PROBLEM

Some of the internal turning heads appear small to be able to cater for refuse vehicles. A lack of space will result in refuse drivers reversing down the streets. This could lead to collisions with vulnerable road users, especially in shared use streets.



Example only

RECOMMENDATION

It is recommended that adequate space be provided at the turning heads to accommodate turning of refuse vehicles with a minimal number of movements.

4.8 Problem

LOCATION

Visibility splays.

PROBLEM

Some of the internal visibility spays cut through parking spaces. This could lead to side-impact or rear-end collisions.



Example only

RECOMMENDATION

It is recommended that the visibility splays be kept free of obstacles.

5.0 Items Raised in This Stage 1 Quality Audit – Accessibility Audit.

5.1 Issue

LOCATION

Drawing NRB-TA-001

ISSUE

There is a short distance between the 6 no. dwellings on the R725 and the proposed junction. These dwellings do not have access to a footpath towards the town centre until the new junction location.



RECOMMENDATION

It is recommended that a footpath be provided to link with these houses so that pedestrians will have segregated accessibility to the school and further to the town centre.

5.2 Issue

LOCATION

Drawing 540003 Rev 00, Road 13&Road 14.

ISSUE

The gradients are steep on Roads 13 and 14. They may not be accessible for mobility impaired pedestrians.

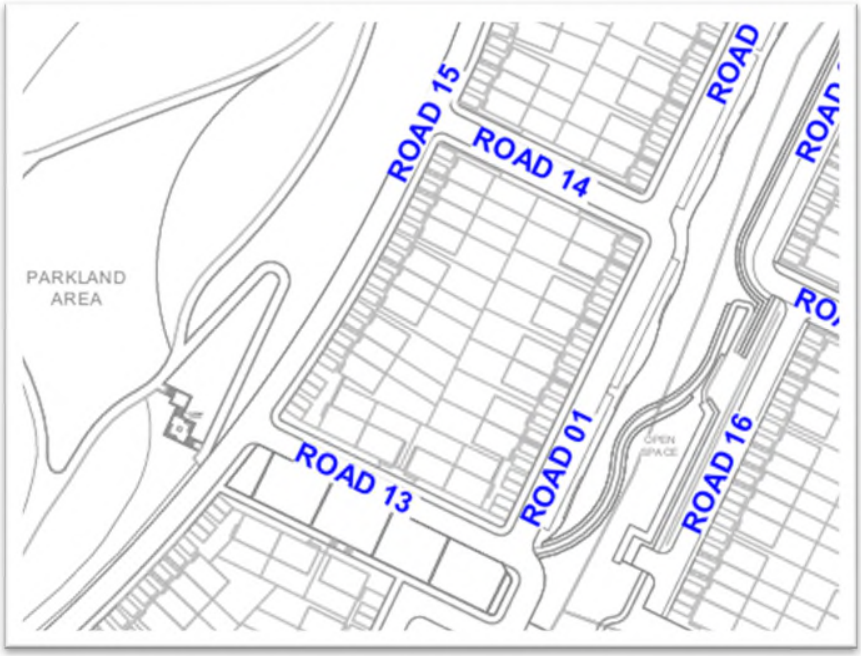

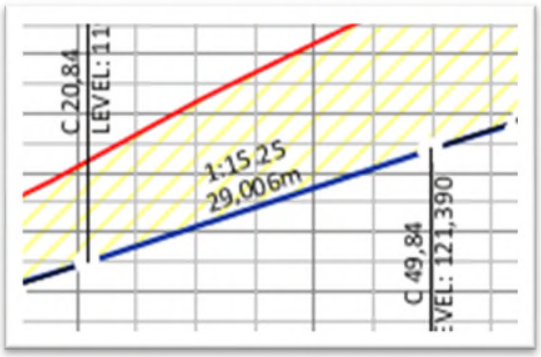

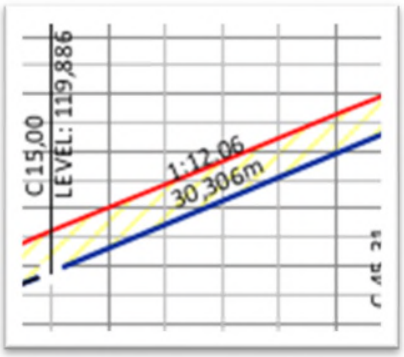

RECOMMENDATION

It is recommended that suitable gradients be provided to facilitate universal access for pedestrians to prevent the need for car journeys.

© Bruton Consulting Engineers Ltd 2025

5.3 Issue

LOCATION

Internal uncontrolled pedestrian crossing locations.

ISSUE

There is no crossing point for pedestrians at Road 11. There will be a desire line to cross at this point.

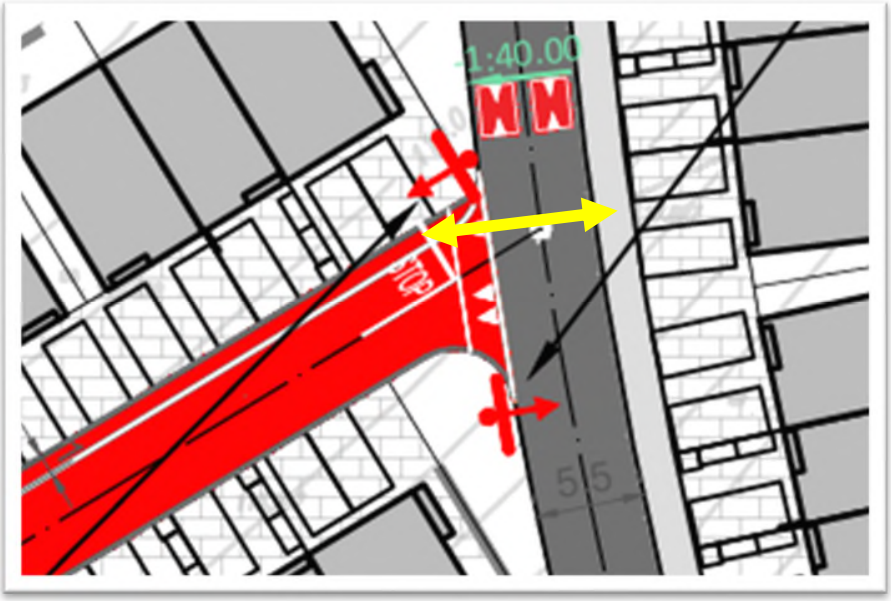

RECOMMENDATION

It is recommended that an uncontrolled crossing be provided but not at the rear of an in-curtilage parking space and not including traversing the taper of the raised table which may be too steep for some mobility impaired pedestrians.

6.0 Items Raised in This Stage 1 Quality Audit – Walking Audit.

6.1 Issue

LOCATION

R725/Kilnahue Lane Junction.

ISSUE

There will be increased demand for pedestrians to cross the R725/Killnahue junction. Pedestrians currently have a low priority with just dropped kerbs and tactile paving.



RECOMMENDATION

It is recommended that a raised crossing with colour contrast be provided with the stop line to the rear, thereby providing higher priority to pedestrians.

7.0 Items Raised in This Stage 1 Quality Audit – Cycling Audit.

7.1 Issue

LOCATION

Drawing NRB-TA-001

ISSUE

Bicycle parking is provided at the top of the steps close to the R725 access. Cyclists using the R725 may wish to use the steps to match the desire line.



RECOMMENDATION

It is recommended that a wheeling ramp be incorporated into the step design.

8.0 Audit Statements.

Road Safety Audit Statement

We certify that we have examined the information provided and the site. The examination has been carried out with the sole purpose of identifying any features of the design which could be removed or modified in order to improve the safety of the scheme.

The problems identified have been noted in this report together with associated safety improvement suggestions which we would recommend should be studied for implementation. The audit has been carried out by the persons named below who have not been involved in any design work on this scheme as a member of the Design Team.

Quality Audit Statement

We certify that we have carried out this audit in accordance with DMURS for those areas independent of the Design team.

Norman Bruton **Signed:** _____

(Audit Team Leader) **Dated:** __28-11-2025_____

Owen O'Reilly **Signed:** _____

(Audit Team Member) **Dated:** 28-11-2025_____

Appendix A

List of Material Supplied for this Road Safety Audit and Quality Audit;

- Drawing 25007-AKM-XXXX-XX-DR-C01-550001
- Drawing 24058_P_005 Proposed Site Plan - Main Site
- Drawing 25007-AKM-XXXX-XX-DR-C01-500001
- Drawing 25007-AKM-XXXX-XX-DR-C01-540001
- Drawing 25007-AKM-XXXX-XX-DR-C01-540002
- Drawing 25007-AKM-XXXX-XX-DR-C01-540003
- Drawing NRB-TA-001
- Drawing NRB-TA-002
- Drawing NRB-TA-003
- Drawing NRB-TA-004
- Drawing NRB-TA-005
- Drawing NRB-TA-006
- Drawing NRB-TA-007
- Drawing NRB-TA-008

Background Information

Draft Transport Assessment Report , NRB October 2025.

Appendix B

Feedback Forms (Road Safety Audit & Quality Audit)

SAFETY AUDIT FORM – FEEDBACK ON AUDIT REPORT

Scheme: Gorey LRD
Stage: 1 Road Safety Audit
Date Audit (Site Visit) Completed: 05-11-2025

Paragraph No. in Safety Audit Report	Problem accepted (yes/no)	Recommended measure accepted (yes/no)	Alternative measures (describe)	Alternative measures accepted by Auditors (Yes/No)
4.1	Yes	Yes - a gateway be provided on the R725 along with transition zone features to calm traffic. Details to be agreed with the local authority at detailed design stage.		
4.2	Yes	Yes – Suitable exit visibility is achievable.		
4.3	No	No - There are currently no dedicated cycling facilities on the R725; accordingly, cyclists will utilise the road carriageway and will access the site via the proposed ghost-island junction. Furthermore, the vast majority of cyclists will use Killnahue Lane, given the proposal to provide 4.0m wide pedestrian / cycle path which connects to the existing cycle facilities on Killnahue Lane.		Yes
4.4	Yes	Yes		
4.5	Yes	Yes – the proposed zebra will be relocated to maximise sightlines, with the existing hedge cut back to ensure that suitable stopping sight distance is provided. Details to be agreed with the local authority at detailed design stage.		

4.6	Yes	Yes – while this section of road is outside the applications control, measures will be agreed with the school authorities and the local authority to prohibit parking along this section of Killnahue Lane. Details to be agreed with the local authority at detailed design stage.		
4.7	Yes	Yes - A swept path analysis was done which showed refuse vehicles can make turns in the space available. It is proposed to widen the arm of the turning head at detailed design stage.		
4.8	Yes	Yes - It is proposed to re-arrange parking in this area to ensure sightlines are not obscured at this junction. This will be undertaken at detailed design stage.		

Signed..... **Date** 27-11-25
Design Team Leader

Signed..... **Date**..... 28-11-2025
Audit Team Leader

Signed..... **Date**..... 28/11/2025
Employer/Developer

QUALITY AUDIT – FEEDBACK FORM

Scheme: Gorey LRD
Quality Audit- Stage 1 (Planning Stage)
Date Audit (site visit) 05-11-2025

Paragraph No. in Quality Audit Report	Problem accepted (yes/no)	Recommended measure accepted (yes/no)	Alternative measures (describe)	Alternative measures accepted by Auditors (Yes/No)
5.1	No	No – This is a long-established residential development that has been in place for many years. Residents may not be supportive of a new pedestrian link being constructed into their estate. However, the local authority may engage with these residents and, subject to consultation, consider extending the existing footpath.		Yes
5.2	Yes	Yes - Due to the inherently steep topography of the site, some road gradients could not be avoided. In accordance with DMURS guidance, the design prioritises shallower gradients on the downhill approaches to junctions to ensure reduced vehicle speeds and improved driver visibility. Where practicable, mitigation measures such as gradient transitions, and platformed junction approaches have been incorporated and further investigated at detailed design to enhance pedestrian safety and accessibility.		
5.3	Yes	Yes- It is proposed to provide a safe crossing in this area that meets the suggested criteria. This will be undertaken at detailed design stage.		
6.1	Yes	Yes - Dropped kerbs and tactile paving are already in place, providing standard pedestrian accessibility measures. Any additional pedestrian facilities can be discussed and agreed with the local authority as required.		
7.1	Yes	Yes - A cycle ramp will be included within the stairs.		



Signed..... **Date** 27-11-25

Design Team Leader



Signed..... **Date**: 28-11-2025

Audit Team Leader

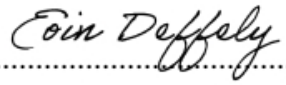

Signed..... **Date**.....28/11/2025

Employer/Developer

Appendix C

Problem Location Plan.


F5/F7 shallow semi-detached / detached 4 bed 7
F4 townhouse corner 4 bed 7
F2 shallow semi-detached 3 bed 5
F3 shallow semi-detached 3 bed 5
F1 townhouse corner 3 bed 5
D1/D1C townhouse end 3 bed 4
E1 townhouse mid 2 bed 4
R1/R2/R3/R4/R5 GF/FF duplex apartments (accessible) 3 bed 5
S1/S2/S3/S4/S5 SF apartments (accessible) 1 bed 2
P1 maisonette (accessible) 1 bed 2
P2 maisonette (accessible) 1 bed 2
Total No. of Units
PLUS 1no 102 CHILD CRÈCHE (S09.9 SQ.M) & 1no COMMUNITY ROOM (59.2 SQ.M)
Site Area (red line bou
Developable Area
Total No. of Units
Density
Open Space
Standard Houses
Apt/Duplex/Maisonet
4 bed
3 bed
2 bed
1 bed
Split level 102no
4m Pedestrian/ cycle route along the public road
Existing vegetation/ hedgerow to be retained where possible
SITE ENTRANCE
4m Pedestrian/ cycle route along the public road
SITE BOUNDARY OUTLINED IN RED
PARKLAND AREA
OPEN SPACE
OPEN SPACE
OPEN SPACE
OPEN SPACE
2-3 storey split level apartments
Dedicated pedestrian/cycle route
Dedicated pedestrian/cycle route
2-3 storey split level
SITE ENTRANCE
5.2
4.6
4.5
6.1
5.3
4.8 example
4.7 example
7.1
4.2
4.4
4.3
5.1
4.1