

01 L1: s11.3 OMOS LITTER BIN - PUBLIC REALM

S11.3 LITTER BIN
DESCRIPTION
316 GRADE STAINLESS STEEL WITH SATIN FINISH OUTER CONSTRUCTION ON LEVEL ADJUSTMENT GALVANIZED BASE. OMOS PATENTED ASHTRAY. FRONT OPENING WITH CONCEALED STAINLESS STEEL HINGE AND SLAM LATCH. 90L LINER.

DIMENSIONS
HEIGHT 1070MM, WIDTH 530MM,
DEPTH 400MM.
CAPACITY 90L.
WEIGHT 62KG.

OPTIONS
GALVANIZED OR PLASTIC LINER.
CHOICE OF DECAL.
WIDE OR CHAMFER APERTURE.

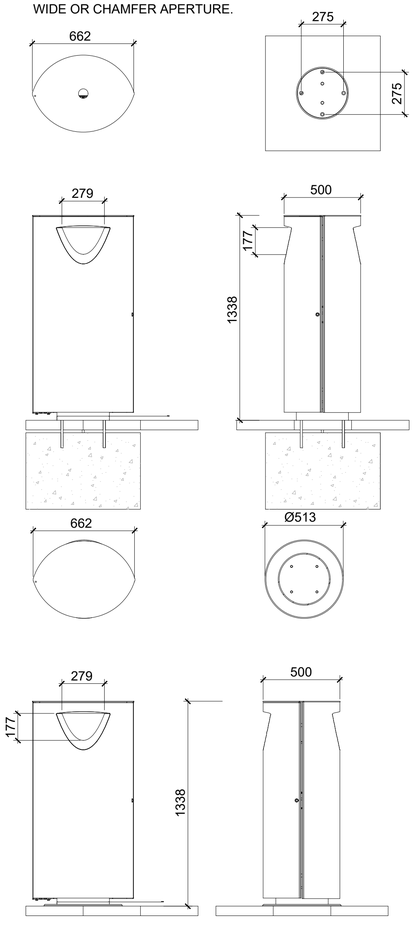



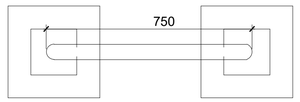

02 TYPICAL SHEFFIELD STAND DETAIL
SCALE: 1:20 @A1

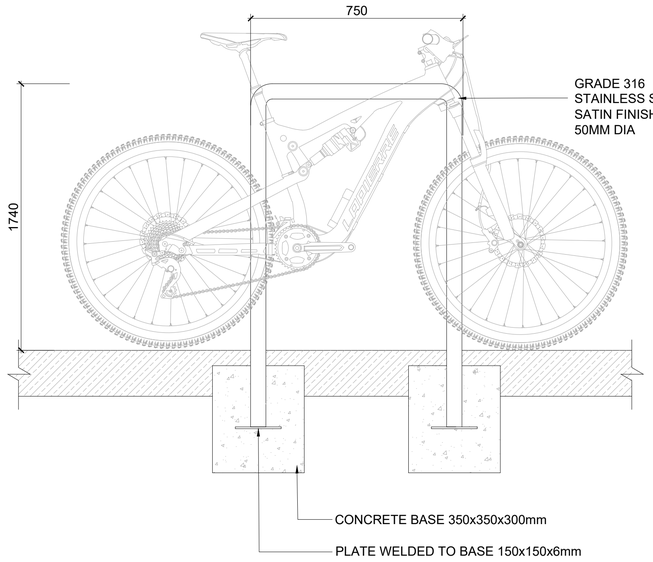

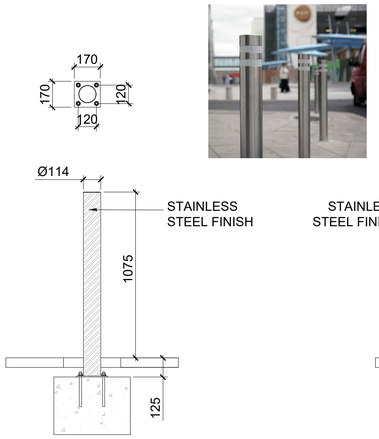

06 BO1: FIXED BOLLARD DETAIL
SCALE: 1:20 OMOS S23 OR SIMILAR APPROVED

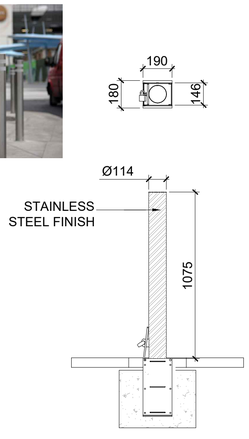

07 BO2: REMOVABLE BOLLARD DETAIL
SCALE: 1:20 OMOS S23 OR SIMILAR APPROVED

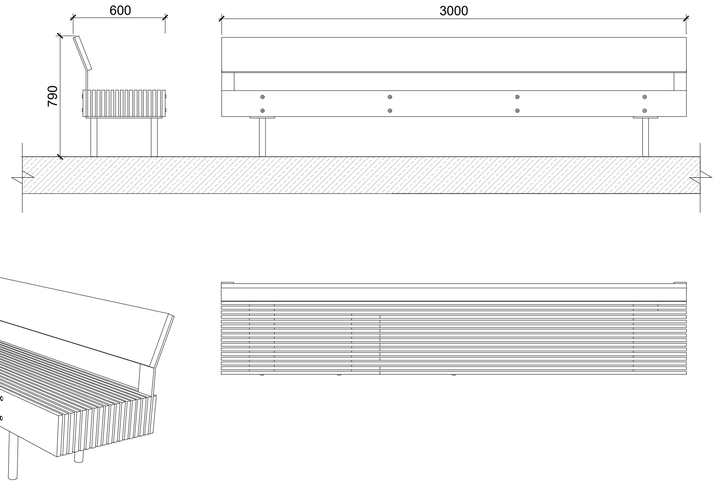

04 B1: TYPICAL TIMBER STRAIGHT BENCH DETAILS MMCITE PARK BENCH WITH BACKREST LWD150t
SCALE: 1:20 @A1

BACKED EXTENDED BENCH, 3 M LONG EACH
VERSIONS: LWD150B PINE WOOD LWD150T TROPICAL WOOD
STRUCTURE TYPE: MADE OF HARDWOODEN GRATE CONNECTED TO STEEL STRUCTURE BY MEANS OF STAINLESS STEEL SCREW JOINTS.
COATING: STEEL STRUCTURE TREATED WITH PROTECTIVE ZINC AND POWDER COATING.
SUPPORTING FRAME: WELDED OF STEEL SHEET AND TUBES.
SEAT: 15 BOARDS MADE OF HARDWOOD WITH A RECTANGULAR SECTION, 3,000 MM LONG.
BACKREST: 1 BOARD MADE OF HARDWOOD WITH A SQUARE SECTION, 3,000 MM LONG.
COLOUR OPTIONS: NATURAL COLOUR OF USED WOOD. STEEL STRUCTURE ZINC-COATED.
ANCHORING: FREELY LAID ON THE PAVING - ADJUSTABLE LEGS. ALTERNATELY ANCHORING UNDER THE PAVING INTO CONCRETE FOUNDATION BY THREADED RODS. NO MATERIAL CAN BE BETWEEN CONCRETE FOUNDATION AND PAVING. ALL STREET FURNITURE ELEMENTS MUST BE PROPERLY ANCHORED ACCORDING TO THE PRODUCER´S TECHNICAL INSTRUCTIONS. THE MANUFACTURER DECLINES RESPONSIBILITY FOR ANY DAMAGES CAUSED BY CARELESS USE OR BY NON-COMPLIANCE WITH THE INSTRUCTIONS.
WEIGHT: LWD150B 151 KG LWD150T 225 KG
OPTION: STEEL STRUCTURE TREATED WITH POWDER COATING.



05 B2: TYPICAL TIMBER CURVED BENCH DETAILS MMCITE TWO SIDED CURVED SEAT LPC12-ae-t
SCALE: 1:20 @A1

BOTH-SIDED SEAT, 2,2 M LONG
VERSIONS: LPC12-AET TROPICAL WOOD, ARCHED SEAT
STRUCTURE TYPE: WOODEN GRATE CONNECTED TO STEEL STRUCTURE BY MEANS OF STAINLESS STEEL SCREW JOINTS.
THE ARCHED SEAT OF MIDDLE LENGTH OF ABOUT 2,5 M, 90° OF SECTOR.
COATING: STEEL STRUCTURE IS TREATED WITH PROTECTIVE ZINC COATING AND POWDER COATING.
SUPPORTING FRAME: BOTH SIDE FRAMES WELDED OF STEEL SHEET NC LASER CUT-SHAPES.
SEAT: WOODEN LAMELLAS OF RECTANGULAR CROSS SECTION.
WEIGHT: LPC12-AET 96,7 KG

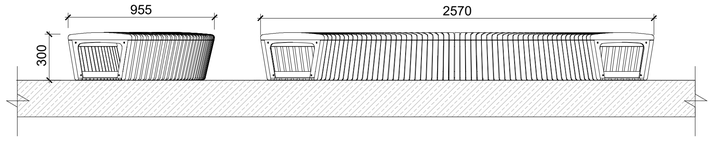

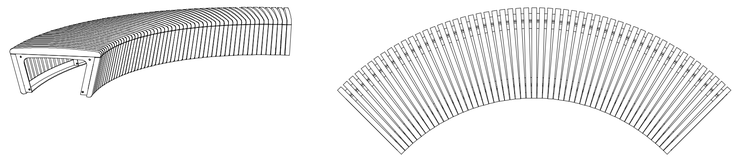



REFERENCE: THIS DRAWING IS NOT FOR CONSTRUCTION

SR LA

SIMON RONAN LANDSCAPE ARCHITECTS

Cork Office
Levis Quay
Skibbereen
Co.Cork
Ireland
A94A431

Dublin Office
25 Glengarriff Parade
Phibsborough
Dublin 7
Ireland
D07 XF25

simon@simonronan.com
+353 86 056 3434

FURNITURE DETAILS
L - 903 A1@AS SHOWN

REV/00

PURPOSE OF DRAWING - PLANNING

GOREY LRD

THIS DRAWING IS TO BE READ IN CONJUNCTION WITH RELEVANT CONSULTANTS DRAWINGS.
ALL DIMENSIONS TO BE CHECKED ON SITE.
NO DIMENSIONS TO BE SCALED FROM THIS DRAWING

NO PART OF THIS DOCUMENT MAY BE RE-PRODUCED OR TRANSMITTED IN ANY FORM OR BY ANY MEANS OR STORED IN ANY SYSTEM OF ANY NATURE WITHOUT THE WRITTEN PERMISSION OF THE LANDSCAPE ARCHITECT AS COPYRIGHT HOLDER EXCEPT AS NOTED BELOW FOR THE PURPOSE FOR WHICH THE DOCUMENT WAS ORIGINALLY ISSUED

DECEMBER 2025