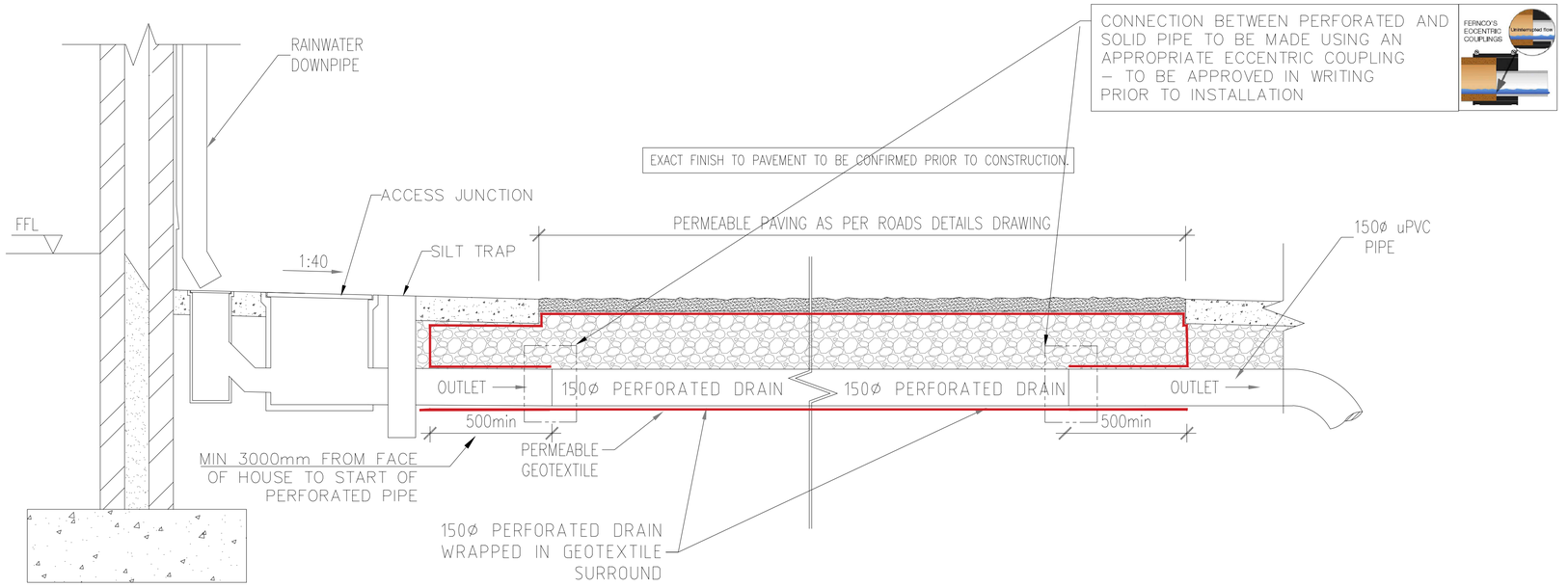

TYPICAL HOUSE SECTION DRAINAGE

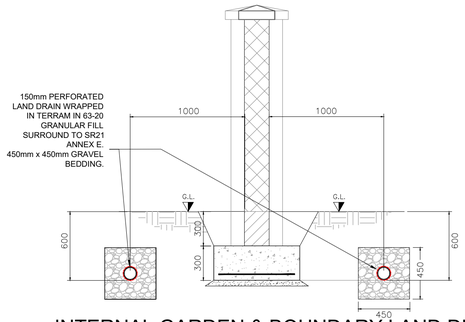

INTERNAL GARDEN & BOUNDARY LAND DRAIN

N.T.S

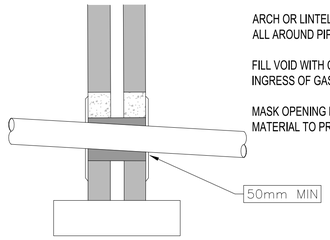

ARCH OR LINTELLED OPENING TO GIVE 50MM SPACE ALL AROUND PIPE.

FILL VOID WITH COMPRESSIBLE SEALANT TO PREVENT INGRESS OF GAS.

MASK OPENING BOTH SIDES WITH RIGID SHEET MATERIAL TO PREVENT ENTRY OF FILL OR VERMIN.

TYPICAL WALL PENETRATION DETAIL

N.T.S

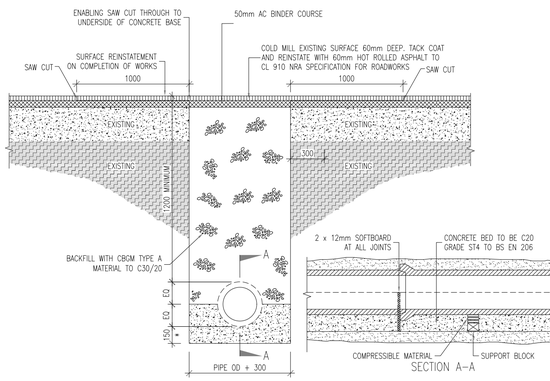

PIPE/DUCT TRENCH AND REINSTATEMENT EXISTING PUBLIC ROADS

N.T.S

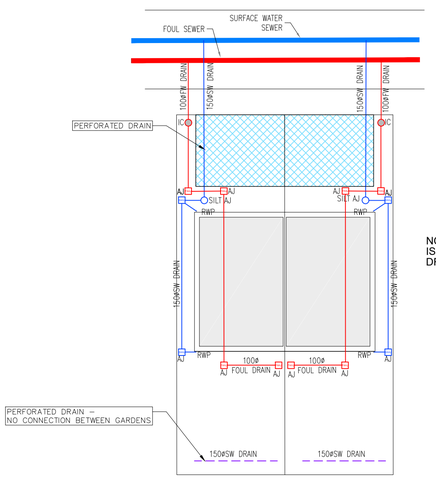

TYPICAL HOUSE DRAINAGE - GARDEN SLOPING AWAY

NTS

NOTE: FOR MID-TERRACED HOUSES, DRAINAGE IS TO BE ARRANGED AS PER PRIVATE DRAINAGE DRAWINGS.

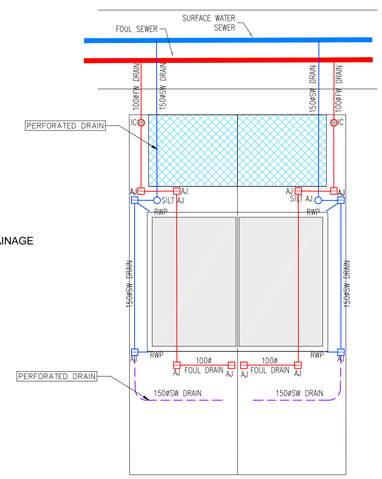

TYPICAL HOUSE DRAINAGE - GARDEN SLOPING BACK

NTS

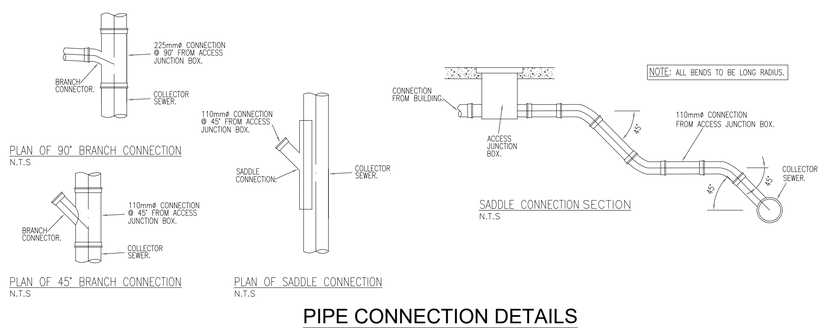

PLAN OF 90° BRANCH CONNECTION
N.T.S

PLAN OF 45° BRANCH CONNECTION
N.T.S

PLAN OF SADDLE CONNECTION
N.T.S

SADDLE CONNECTION SECTION
N.T.S

PIPE CONNECTION DETAILS

N.T.S

NOTES

1. NO PART OF THIS DRAWING MAY BE REPRODUCED OR TRANSMITTED IN ANY FORM OR STORED IN ANY RETRIEVAL SYSTEM OF ANY NATURE WITHOUT THE WRITTEN PERMISSION OF AKM DESIGN AS COPYRIGHT HOLDER, EXCEPT AS AGREED FOR USE ON THE PROJECT FOR WHICH THE DRAWING IS ORIGINALLY ISSUED.
2. THIS DRAWING SHALL BE READ IN CONJUNCTION WITH ALL RELEVANT ENGINEERS, ARCHITECTS AND SPECIALISTS DRAWINGS AND SPECIFICATION.
3. ALL DIMENSIONS ARE IN mm UNLESS OTHERWISE NOTED.
4. DO NOT SCALE DIMENSIONS.
5. THE CONTRACTOR SHALL CHECK ALL DIMENSIONS PRIOR TO COMMENCEMENT OF CONSTRUCTION. DISCREPANCIES SHALL BE REPORTED TO THIS OFFICE IN WRITING.
6. ALL REINFORCED CONCRETE ON THIS DRAWING SHALL BE U.N.O.: 35N20 COVER = 50mm MIN.
7. SURFACE FINISHES FOR CONCRETE:

   -CLASS F1 FOR ALL CONCRETE 100mm OR MORE BELOW GROUND LEVEL.

   -CLASS F3 FOR ALL EXPOSED CONCRETE ABOVE 100mm BELOW GROUND LEVEL.
8. ALL EXPOSED CORNERS ON CONCRETE SHALL BE CHAMFERED WITH 25mm X 25mm CHAMFERS.
9. ALL STRUCTURAL CONCRETE(HEADWALLS, RC MANHOLES, PETROL INTERCEPTOR SLABS) TO RECEIVE MC DUR 1680(OR SIMILAR APPROVED TAR MODIFIED EPOXY RESIN) TO ALL BURIED SURFACES, TO FINISH 100mm BELOW GROUND LEVEL.
10. ALL SEWERS SHALL BE PRESSURE TESTED PRIOR TO BACKFILLING.
11. TYPE 1 GRANULAR MATERIAL: BROKEN STONE OR GRAVEL TO PASS 10mm SIEVE AND BE RETAINED ON 5mm SIEVE.
12. TYPE 2 GRANULAR MATERIAL: BROKEN STONE OR GRAVEL TO PASS 10mm-25mm SIEVE, ACCORDING TO PIPE SIZE, (SEE TABLE) AND BE RETAINED ON 5mm SIEVE.
13. TYPE 3 SELECTED FILL: UNIFORM READILY COMPACTED MATERIAL FREE FROM TREE ROOTS, VEGETABLE MATTER, BUILDING DEBRIS, AND FROZEN SOIL AND EXCLUDING CLAY LUMPS RETAINED ON A 75mm SIEVE AND STONES RETAINED ON A 37.5mm SIEVE.
14. FOUL SEWERS AND MANHOLES TO BE CONSTRUCTED TO IRISH WATER STANDARD DETAILS.

    TYPE 2 GRANULAR MATERIAL:

PIPE SIZE	100% PASSING
UP TO 225mm	10mm SIEVE
225 TO 450mm	20mm SIEVE
ABOVE 450mm	25mm SIEVE

15. WHEN ALLOWED BY LOCAL AUTHORITY OR COUNTY COUNCIL, PRECAST MANHOLES SHALL HAVE 150mm CONCRETE SURROUND UNLESS MANUFACTURER CAN SHOW, TO THE ENGINEERS SATISFACTION, THAT PERMANENTLY WATERPROOF JOINTS CAN BE ACHIEVED BY SOME OTHER METHOD.
16. FOR 750mm Ø PIPES OR GREATER, USE A SAFETY CHAIN AND PROVIDE 25mm Ø GALVANIZED SOLID BAR HANDRAILS AT EDGES OF BENCHING.
17. STEP RUNGS TO BE PROVIDED IN MANHOLES DEEPER THAN 1m. LADDER TO BE USED FOR MANHOLES DEEPER THAN 4.5m.
18. IN MANHOLES WHOSE PIPE DIAMETER IS GREATER THAN 375, ONE BENCHING SHOULD BE AT LEAST 400 WIDE.
19. ALL MANHOLE COVERS & GULLIES TO BE LOCKABLE.
20. MANHOLE COVERS & FRAMES ARE TO BE IN ACCORDANCE WITH ISEN124:
    - CARRIAGEWAYS _ _ _ _ _ _ _ _ CLASS D400
    - FOOTPATHS & GRASSED AREAS _ _ _ _ _ _ _ _ CLASS B125 PUBLIC
    - AREAS INACCESSIBLE TO WHEELED VEHICLES _ _ _ _ _ CLASS A15

COPYRIGHT RESERVED. ALL DRAWINGS TO BE READ IN CONJUNCTION WITH, ARCHITECTURE, STRUCTURAL ENGINEERS & MECHANICAL ENGINEERS DETAILS.

DO NOT SCALE DRAWING. USE FIGURED DIMENSIONS ONLY. ALL DISCREPANCIES TO BE REPORTED TO AKM DESIGN GROUP IMMEDIATELY. ALL DIMENSIONS TO BE CHECKED ON SITE BY MAIN CONTRACTOR PRIOR TO CONSTRUCTION. MAIN CONTRACTOR IS RESPONSIBLE FOR SET-OUT.

DESCRIPTION	REV	DATE
FIRST ISSUE	00	10/25

AKM DESIGN GROUP.
Innovating tomorrow through design
14 Riverwalk, Citywest, Dublin 24, D24 XN32
T: +353 1 479 6234 E: info@akmdesign.ie akmdesign.ie

STAGE: S4 - FOR PLANNING

DRAWN BY:	APPROVED BY:	AKM JOB NUMBER:
DM	CK	25007
DATE: 10/25		SCALE: AS SHOWN @ A1
REVISION NUMBER: 00		SEQUENCE NUMBER: 400003

DOCUMENT NO: 25007-AKM-XXXX-XX-DR-C01-400003

PROJECT TITLE: GOREY RESIDENTIAL DEVELOPMENT

DRAWING TITLE: DRAINAGE & SITE DETAILS SHEET 3 OF 4

CLIENT: GLENVEAGH HOMES