Kilnahue, Gorey, Co. Wexford

Housing Quality Assessment

Proposed Residential Development at Kilnahue, Gorey, Co. Wexford

LRD Planning Application - November 2025



DEADY GAHAN ARCHITECTS

Document prepared by Deady Gahan Architects

Table of contents

1.0 Introduction and Project Description 3

2.0 Policy Overview 4

3.0 Proposed Site Layout 5

3.1 Summary Schedule 6

3.2 Developable Area & Open Spaces 7

4.0 Housing Quality Assessment - Houses 8

5.0 Housing Quality Assessment - Apartments 16

6.0 Bicycle Spaces 19

7.0 Waste Management 20

1.0 Introduction and Project Description

This Housing Quality Assessment report has been prepared by Deady Gahan Architects to provide information on the proposed residential development at Kilnahue, Gorey, Co. Wexford.

The total site area comprises 19.4 hectares, with a developable area of 11.5 hectares. The land is a greenfield site and includes a challenging topography, with a 30-metre elevation drop from the western and northern boundaries towards the south and east, impacting drainage patterns, infrastructure, and building placement.

The proposed scheme will consist of the development of 413 no. residential units, consisting of 64 no. 1 & 3 bed apartments (in the form of own door access maisonettes, apartments and duplex units), 349 no. houses (ranging from 2 - 4 bedrooms), a 102no child creche and a community room. The scheme will also include car parking, cycle parking, new pedestrian/cycle links and storage. Landscaping will include high quality private open spaces, communal amenity areas and public open space provision.

Deady Gahan Architects are the designers of the proposed scheme and the units have been specifically designed to meet the demands of the housing market and to comply with key design policy parameters. All the proposed units will be assessed in this report against the relative regulations.

The proposed development will accommodate no. 413 residential units:

- No. 349 Standard housing units
- No. 64 Own-door access apartment/duplex and maisonette units

2.0 Policy Overview

Deady Gahan Architects have been appointed to produce this Housing Quality Assessment to accompany the Large-scale Residential Development (LRD) planning application to Wexford County Council for the proposed residential development which consists of:

413 no. residential units (349 no. houses and 64 no. apartments), a 102no child creche, a community room and associated site works at Kilnahue, Gorey, Co. Wexford

This report demonstrates the proposed residential houses and apartments against the provisions of:

- Quality Housing for Sustainable Communities, Department of the Environment, Heritage and Local Government (2007)
- Sustainable Urban Housing: Design Standards for New Apartments. Guidelines for Planning Authorities (2023) and Planning Design Standards for Apartments. Guidelines for Planning Authorities (2025)
- Wexford County Development Plan 2022-2028
- Sustainable Residential Development and Compact Settlements. Guidelines for Planning Authorities (2024)

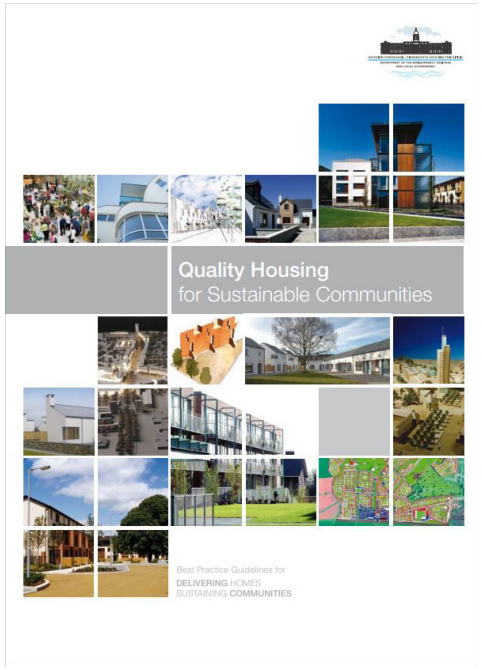



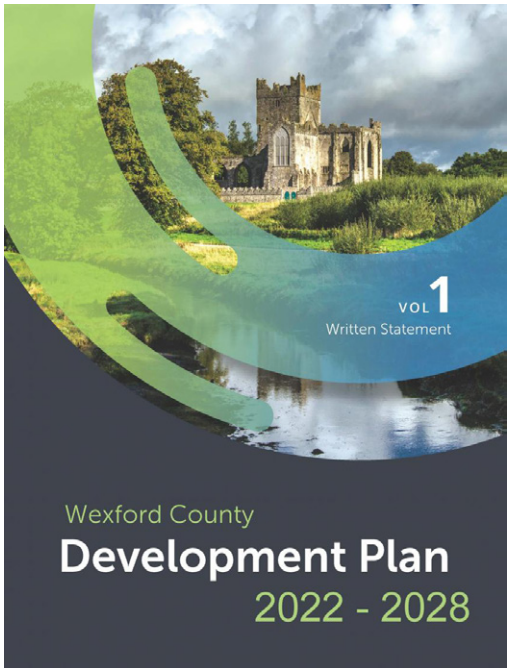

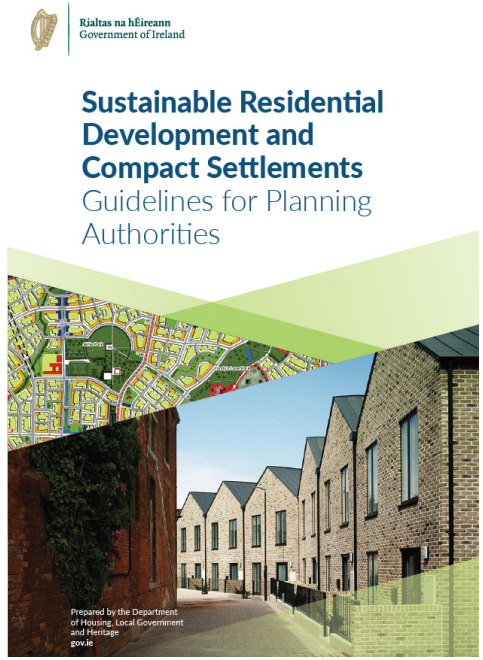

3.0 Proposed Site Layout



3.1 Summary Schedule

RESIDENTIAL SITE - GOREY LRD						
Unit Type	**Description**	**No. of Bedroom**	**No. of Bed Space**	**Unit Area (sq.m.)**	**No. of Units**	**%**
B1	semi-detached	4 bed	7	151.60	16	3.9%
F5/F7	shallow semi-detached / detached	4 bed	7	156.20	15	3.6%
F4	townhouse corner	4 bed	7	154.00	8	1.9%
F2	shallow semi-detached	3 bed	5	104.10	6	1.5%
F3	shallow semi-detached	3 bed	5	109.70	16	3.9%
F1	townhouse corner	3 bed	5	102.60	6	1.5%
D1/D1C	townhouse end	3 bed	4	92.00	148	35.9%
E1	townhouse mid	2 bed	4	80.00	134	32.4%
R1/R2/R3/R4/R5	GF/FF duplex apartments (accessible)	3 bed	5	107.20	28	6.8%
S1/S2/S3/S4/S5	SF apartments (accessible)	1 bed	2	51.70	28	6.8%
P1	maisonette (accessible)	1 bed	2	56.6	4	0.9%
P2	maisonette (accessible)	1 bed	2	56.5	4	0.9%
Total No. of Units					**413**	**100.0%**
PLUS 1no 102 CHILD CRÈCHE (509.9 SQ.M) & 1no COMMUNITY ROOM (59.2 SQ.M)						

SITE SCHEDULE		
Site Area (red line boundary)	19.4 HA	
Developable Area	11.5 HA	
Total No. of Units	No. 413	
Density	35.9 units/HA	
Open Space	15.0%	
Standard Houses	349	84.6%
Apt/Duplex/Maisonette Units	64	15.4%
4 bed	39	9.4%
3 bed	204	49.6%
2 bed	134	32.4%
1 bed	36	8.6%

3.2 Developable Area & Open Spaces

The total SITE AREA comprises 19.4HA, with a DEVELOPABLE AREA of 11.5HA. The method for measuring the residential density (35.9UPH) is based on the approach stated in Appendix B of the 2024 Sustainable Residential Development and Compact Settlements Guidelines for Planning Authorities. In this, Table 1 states the areas that should be excluded from the Net Site Area/Developable area include lands with topographical constraints (i.e. steepness). In light of this, given the challenging levels that exist on site, we have excluded areas along the site boundaries that are steeply sloped/landscaped embankments. We have also excluded the existing public road and the open space zoned lands in the north-western part of the site from the developable area.

These guidelines also state that the residential density shall exclude the non-residential uses (i.e. the 102no child creche). With these areas excluded in line with Table 1 of the 2024 Sustainable Residential Development and Compact Settlements Guidelines, the Net Site Area/Developable area equates to 11.5Ha.

1.73HA Public Open Space is provided which equates to **15%** of the developable area. There is also a large parkland space proposed on the north-western part of the site which future residents will have access to and this is in addition to the public open space within the developable area.

Additional Areas for Communal Open Spaces for the apartment units has also been provided on site which have been included on top of the Public Open Space calculation.

DEVELOPABLE AREA (ORANGE)

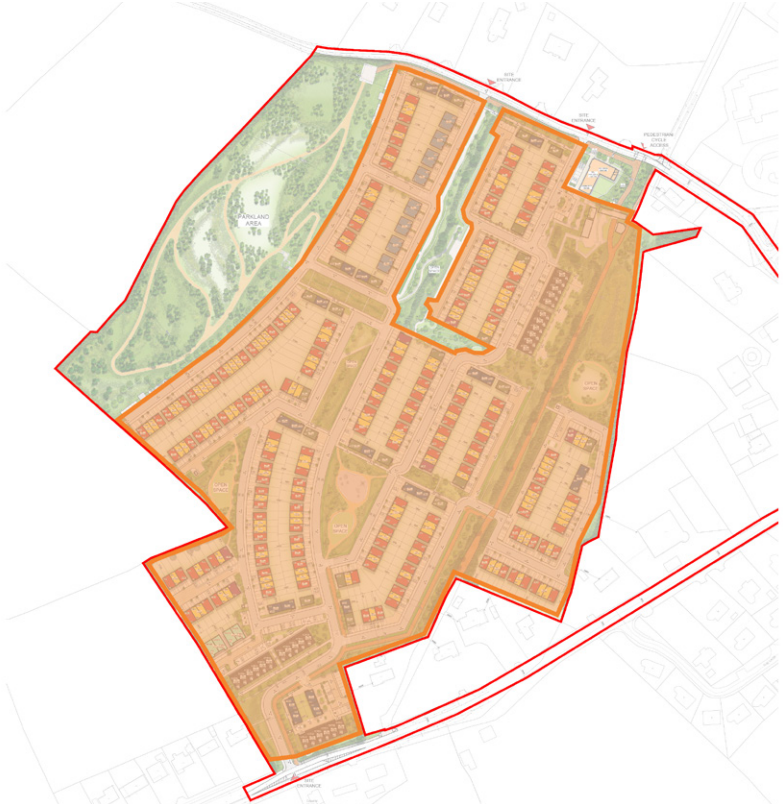

OPEN SPACE ALLOCATION	
DEVELOPABLE AREA = 11.5Ha	
Communal Open Space	Area (sqm/Ha)
1	224sqm / 0.022Ha
2	236sqm / 0.024Ha
3	416sqm / 0.042Ha
The Communal Open Space requirement is as follows: - 1-bed apartments = 5sqm x 36 no units = 180sqm - 2-bed apartments = 7sqm x 0 no units = 0sqm - 3-bed apartments = 9sqm x 28 no units = 252sqm ***432sqm required - 876sqm provided***	
Public Open Space	Area (sqm/Ha)
4	1,583sqm / 0.158Ha
5	2,862sqm / 0.286Ha
6	1,534sqm / 0.153Ha
7	851sqm / 0.085Ha
8	10,489sqm / 1.049Ha
TOTAL PUBLIC OPEN SPACE	17,319sqm / 1.732Ha
Parkland Open Space	Area (sqm/Ha)
9	27,877sqm / 2.788Ha

OPEN SPACE STRATEGY

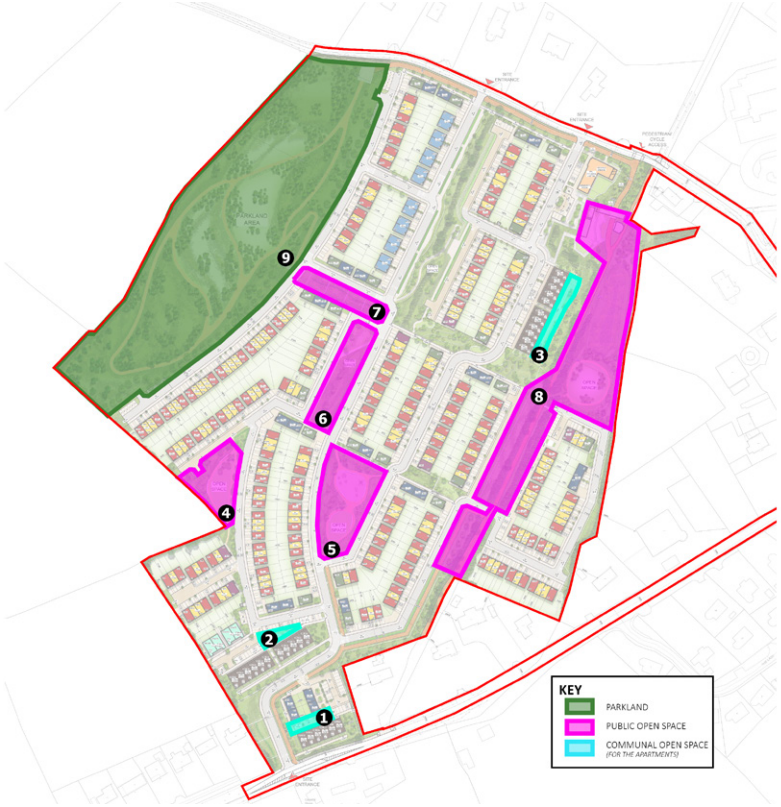

4.0 Housing Quality Assessment - Houses and Later Living House Units

Regarding the houses, this Housing Quality Assessment provides a framework which quantifies each of the criteria required by the *"Quality Housing for Sustainable Communities (2007)"*, the *"Sustainable Residential Development and Compact Settlements, Guidelines for Planning Authorities (2024)"* and the *"Wexford County Development Plan 2022-2028"*.

Qualitative aspects such as the residential conceptual design approach are covered within the accompanying "Architectural Design Statement". Please see schedule on the following pages showing the house typologies proposed within the development compared with the relative legislation. The minimum guidelines relate to *"Quality Housing for Sustainable Communities (2007)"* with the exception of minimum private amenity spaces which relates to *"Sustainable Residential Development and Compact Settlements (2024)"*.

The size and depth for private amenity spaces are dictated by the Compact Growth Guidelines issued in 2024, with minimum garden depths of 8m achieved (for units with habitable rooms at first floor that overlook the rear garden) and the minimum area requirements for gardens of houses as follows;

- Minimum 30 sq.m. for 2 bed houses.
- Minimum 40 sq.m. for 3 bed houses.
- Minimum 50 sq.m. for 4 bed houses.

Table 5.1 Minimum Private Open Space Standard for Houses

House	Minimum Private Open Space	Max Semi-Private (in lieu)
1 bed	20 sq.m	10 sq.m
2 bed	30 sq.m	15 sq.m
3 bed	40 sq.m	20 sq.m
4 bed+	50 sq.m	25 sq.m

Extract from Sustainable Residential Development and Compact Settlements (2024).

DWELLING TYPE	TARGET GROSS FLOOR AREA	MINIMUM - MAIN LIVING ROOM	AGGREGATE LIVING AREA	AGGREGATE BEDROOM AREA	STORAGE
	(m²)	(m²)	(m²)	(m²)	(m²)
Family Dwellings - 3 or more persons					
4BED/7P House (3 storey)	120	15	40	43	6
4BED/7P House (2 storey)	110	15	40	43	6
4BED/7P House (1 storey)	100	15	40	43	6
4BED/7P Apartment	105	15	40	43	11
3BED/6P House (3 storey)	110	15	37	36	6
3BED/6P House (2 storey)	100	15	37	36	6
3BED/6P House (1 storey)	90	15	37	36	6
3BED/6P Apartment	94	15	37	36	10
3BED/5P House (3 storey)	102	13	34	32	5
3BED/5P House (2 storey)	92	13	34	32	5
3BED/5P House (1 storey)	82	13	34	32	5
3BED/5P Apartment	86	13	34	32	9
3BED/4P House (2 storey)	83	13	30	28	4
3BED/4P House (1 storey)	73	13	30	28	4
3BED/4P Apartment	76	13	30	28	7
2BED/4P House (2 storey)	80	13	30	25	4
2BED/4P House (1 storey)	70	13	30	25	4
2BED/4P Apartment	73	13	30	25	7
2BED/3P House (2 storey)	70	13	28	20	3
2BED/3P House (1 storey)	60	13	28	20	3
2BED/3P Apartment	63	13	28	20	5
1BED/2P House (1 storey)	44	11	23	11	2
1BED/2P Apartment	45	11	23	11	3

Extract from Quality Housing for Sustainable Communities (2007).





Schedule of Accomodation and Housing Quality Assesment

UNIT NO.	UNIT TYPE	DESCRIPTION	BED SPACES	DUAL ASPECT	MIN. UNIT AREA (m^2)	UNIT AREA (m^2)	MIN. AGG. LIVING AREA (m^2)	AGG. LIVING AREA (m^2)	BED 1 (m^2)	BED 2 (m^2)	BED 3 (m^2)	BED 4 (m^2)	MIN. AGG. BED AREA (m^2)	AGG. BED AREA (m^2)	MIN. STORAGE (m^2)	STORAGE (m^2)	MIN. PRIVATE AMENITY SPACE (m^2)	PRIVATE AMENITY SPACE (m^2)
HOUSING																		
1	F3	3 BED SEMI-DETACHED	5	Yes	92.0	109.7	34.0	34.1	13.5	13.0	7.6	/	32.0	34.1	5.0	5.6	40.0	64.4
2	F5(m)	4 BED SEMI-DETACHED	7	Yes	120.0	156.2	40.0	54.7	13.0	11.8	11.6	7.6	43.0	44.0	6.0	8.0	50.0	53.7
3	B1(m)	4 BED SEMI-DETACHED	7	Yes	120.0	151.6	40.0	56.5	13.4	12.0	11.5	7.3	43.0	44.2	6.0	7.0	50.0	78.7
4	B1	4 BED SEMI-DETACHED	7	Yes	120.0	151.6	40.0	56.5	13.4	12.0	11.5	7.3	43.0	44.2	6.0	7.0	50.0	71.8
5	B1(m)	4 BED SEMI-DETACHED	7	Yes	120.0	151.6	40.0	56.5	13.4	12.0	11.5	7.3	43.0	44.2	6.0	7.0	50.0	71.8
6	B1	4 BED SEMI-DETACHED	7	Yes	120.0	151.6	40.0	56.5	13.4	12.0	11.5	7.3	43.0	44.2	6.0	7.0	50.0	71.8
7	B1(m)	4 BED SEMI-DETACHED	7	Yes	120.0	151.6	40.0	56.5	13.4	12.0	11.5	7.3	43.0	44.2	6.0	7.0	50.0	71.8
8	B1	4 BED SEMI-DETACHED	7	Yes	120.0	151.6	40.0	56.5	13.4	12.0	11.5	7.3	43.0	44.2	6.0	7.0	50.0	69.7
9	B1(m)	4 BED SEMI-DETACHED	7	Yes	120.0	151.6	40.0	56.5	13.4	12.0	11.5	7.3	43.0	44.2	6.0	7.0	50.0	69.7
10	B1	4 BED SEMI-DETACHED	7	Yes	120.0	151.6	40.0	56.5	13.4	12.0	11.5	7.3	43.0	44.2	6.0	7.0	50.0	56.8
11	D1C(m)	3 BED TOWNHOUSE	4	Yes	92.0	92.0	30.0	32.2	13.0	10.0	7.1	/	28.0	30.1	4.0	4.4	40.0	53.2
12	E1(m)	2 BED TOWNHOUSE	4	Yes	80.0	80.0	30.0	33.7	14.5	11.4	/	/	25.0	25.9	4.0	5.2	30.0	45.8
13	D1	3 BED TOWNHOUSE	4	Yes	92.0	92.0	30.0	32.2	13.0	10.0	7.1	/	28.0	30.1	4.0	4.4	40.0	69.0
14	D1(m)	3 BED TOWNHOUSE	4	Yes	92.0	92.0	30.0	32.2	13.0	10.0	7.1	/	28.0	30.1	4.0	4.4	40.0	77.0
15	E1(m)	2 BED TOWNHOUSE	4	Yes	80.0	80.0	30.0	33.7	14.5	11.4	/	/	25.0	25.9	4.0	5.2	30.0	53.5
16	D1	3 BED TOWNHOUSE	4	Yes	92.0	92.0	30.0	32.2	13.0	10.0	7.1	/	28.0	30.1	4.0	4.4	40.0	78.6
17	D1(m)	3 BED TOWNHOUSE	4	Yes	92.0	92.0	30.0	32.2	13.0	10.0	7.1	/	28.0	30.1	4.0	4.4	40.0	82.8
18	E1(m)	2 BED TOWNHOUSE	4	Yes	80.0	80.0	30.0	33.7	14.5	11.4	/	/	25.0	25.9	4.0	5.2	30.0	61.5
19	E1(m)	2 BED TOWNHOUSE	4	Yes	80.0	80.0	30.0	33.7	14.5	11.4	/	/	25.0	25.9	4.0	5.2	30.0	63.6
20	D1	3 BED TOWNHOUSE	4	Yes	92.0	92.0	30.0	32.2	13.0	10.0	7.1	/	28.0	30.1	4.0	4.4	40.0	91.6
21	F5	4 BED SEMI-DETACHED	7	Yes	120.0	156.2	40.0	54.7	13.0	11.8	11.6	7.6	43.0	44.0	6.0	8.0	50.0	51.0
22	F3(m)	3 BED SEMI-DETACHED	5	Yes	92.0	109.7	34.0	34.1	13.5	13.0	7.6	/	32.0	34.1	5.0	5.6	40.0	61.6
23	F7(m)	4 BED DETACHED	7	Yes	120.0	156.2	40.0	54.7	13.0	11.8	11.6	7.6	43.0	44.0	6.0	8.0	50.0	75.2
24	D1(m)	3 BED TOWNHOUSE	4	Yes	92.0	92.0	30.0	32.2	13.0	10.0	7.1	/	28.0	30.1	4.0	4.4	40.0	62.5
25	E1(m)	2 BED TOWNHOUSE	4	Yes	80.0	80.0	30.0	33.7	14.5	11.4	/	/	25.0	25.9	4.0	5.2	30.0	44.5
26	D1	3 BED TOWNHOUSE	4	Yes	92.0	92.0	30.0	32.2	13.0	10.0	7.1	/	28.0	30.1	4.0	4.4	40.0	62.5
27	D1(m)	3 BED TOWNHOUSE	4	Yes	92.0	92.0	30.0	32.2	13.0	10.0	7.1	/	28.0	30.1	4.0	4.4	40.0	62.5
28	E1(m)	2 BED TOWNHOUSE	4	Yes	80.0	80.0	30.0	33.7	14.5	11.4	/	/	25.0	25.9	4.0	5.2	30.0	44.5
29	E1(m)	2 BED TOWNHOUSE	4	Yes	80.0	80.0	30.0	33.7	14.5	11.4	/	/	25.0	25.9	4.0	5.2	30.0	44.5
30	D1	3 BED TOWNHOUSE	4	Yes	92.0	92.0	30.0	32.2	13.0	10.0	7.1	/	28.0	30.1	4.0	4.4	40.0	62.5
31	D1(m)	3 BED TOWNHOUSE	4	Yes	92.0	92.0	30.0	32.2	13.0	10.0	7.1	/	28.0	30.1	4.0	4.4	40.0	62.5
32	E1(m)	2 BED TOWNHOUSE	4	Yes	80.0	80.0	30.0	33.7	14.5	11.4	/	/	25.0	25.9	4.0	5.2	30.0	44.5
33	F4	4 BED TOWNHOUSE	7	Yes	120.0	154.0	40.0	56.3	13.4	12.1	11.4	7.3	43.0	44.2	6.0	6.9	50.0	60.0
34	D1C(m)	3 BED TOWNHOUSE	4	Yes	92.0	92.0	30.0	32.2	13.0	10.0	7.1	/	28.0	30.1	4.0	4.4	40.0	60.0
35	E1	2 BED TOWNHOUSE	4	Yes	80.0	80.0	30.0	33.7	14.5	11.4	/	/	25.0	25.9	4.0	5.2	30.0	44.5
36	D1	3 BED TOWNHOUSE	4	Yes	92.0	92.0	30.0	32.2	13.0	10.0	7.1	/	28.0	30.1	4.0	4.4	40.0	62.5
37	D1(m)	3 BED TOWNHOUSE	4	Yes	92.0	92.0	30.0	32.2	13.0	10.0	7.1	/	28.0	30.1	4.0	4.4	40.0	62.5
38	E1	2 BED TOWNHOUSE	4	Yes	80.0	80.0	30.0	33.7	14.5	11.4	/	/	25.0	25.9	4.0	5.2	30.0	44.5
39	E1	2 BED TOWNHOUSE	4	Yes	80.0	80.0	30.0	33.7	14.5	11.4	/	/	25.0	25.9	4.0	5.2	30.0	44.5
40	D1	3 BED TOWNHOUSE	4	Yes	92.0	92.0	30.0	32.2	13.0	10.0	7.1	/	28.0	30.1	4.0	4.4	40.0	62.5
41	D1(m)	3 BED TOWNHOUSE	4	Yes	92.0	92.0	30.0	32.2	13.0	10.0	7.1	/	28.0	30.1	4.0	4.4	40.0	62.5
42	E1	2 BED TOWNHOUSE	4	Yes	80.0	80.0	30.0	33.7	14.5	11.4	/	/	25.0	25.9	4.0	5.2	30.0	44.5
43	D1	3 BED TOWNHOUSE	4	Yes	92.0	92.0	30.0	32.2	13.0	10.0	7.1	/	28.0	30.1	4.0	4.4	40.0	62.5
44	F5	4 BED SEMI-DETACHED	7	Yes	120.0	156.2	40.0	54.7	13.0	11.8	11.6	7.6	43.0	44.0	6.0	8.0	50.0	54.5
45	F3(m)	3 BED SEMI-DETACHED	5	Yes	92.0	109.7	34.0	34.1	13.5	13.0	7.6	/	32.0	34.1	5.0	5.6	40.0	74.0
46	B1(m)	4 BED SEMI-DETACHED	7	Yes	120.0	151.6	40.0	56.5	13.4	12.0	11.5	7.3	43.0	44.2	6.0	7.0	50.0	71.3
47	B1	4 BED SEMI-DETACHED	7	Yes	120.0	151.6	40.0	56.5	13.4	12.0	11.5	7.3	43.0	44.2	6.0	7.0	50.0	89.0
48	B1(m)	4 BED SEMI-DETACHED	7	Yes	120.0	151.6	40.0	56.5	13.4	12.0	11.5	7.3	43.0	44.2	6.0	7.0	50.0	89.0
49	B1	4 BED SEMI-DETACHED	7	Yes	120.0	151.6	40.0	56.5	13.4	12.0	11.5	7.3	43.0	44.2	6.0	7.0	50.0	91.7
50	B1(m)	4 BED SEMI-DETACHED	7	Yes	120.0	151.6	40.0	56.5	13.4	12.0	11.5	7.3	43.0	44.2	6.0	7.0	50.0	91.7
51	B1	4 BED SEMI-DETACHED	7	Yes	120.0	151.6	40.0	56.5	13.4	12.0	11.5	7.3	43.0	44.2	6.0	7.0	50.0	91.7
52	B1(m)	4 BED SEMI-DETACHED	7	Yes	120.0	151.6	40.0	56.5	13.4	12.0	11.5	7.3	43.0	44.2	6.0	7.0	50.0	91.7
53	B1	4 BED SEMI-DETACHED	7	Yes	120.0	151.6	40.0	56.5	13.4	12.0	11.5	7.3	43.0	44.2	6.0	7.0	50.0	85.1

Schedule of Accomodation and Housing Quality Assesment

UNIT NO.	UNIT TYPE	DESCRIPTION	BED SPACES	DUAL ASPECT	MIN. UNIT AREA (m^2)	UNIT AREA (m^2)	MIN. AGG. LIVING AREA (m^2)	AGG. LIVING AREA (m^2)	BED 1 (m^2)	BED 2 (m^2)	BED 3 (m^2)	BED 4 (m^2)	MIN. AGG. BED AREA (m^2)	AGG. BED AREA (m^2)	MIN. STORAGE (m^2)	STORAGE (m^2)	MIN. PRIVATE AMENITY SPACE (m^2)	PRIVATE AMENITY SPACE (m^2)
HOUSING																		
54	F5	4 BED SEMI-DETACHED	7	Yes	120.0	156.2	40.0	54.7	13.0	11.8	11.6	7.6	43.0	44.0	6.0	8.0	50.0	54.5
55	F3(m)	3 BED SEMI-DETACHED	5	Yes	92.0	109.7	34.0	34.1	13.5	13.0	7.6	/	32.0	34.1	5.0	5.6	40.0	61.1
56	F3	3 BED SEMI-DETACHED	5	Yes	92.0	109.7	34.0	34.1	13.5	13.0	7.6	/	32.0	34.1	5.0	5.6	40.0	61.1
57	F5(m)	4 BED SEMI-DETACHED	7	Yes	120.0	156.2	40.0	54.7	13.0	11.8	11.6	7.6	43.0	44.0	6.0	8.0	50.0	54.5
58	D1(m)	3 BED TOWNHOUSE	4	Yes	92.0	92.0	30.0	32.2	13.0	10.0	7.1	/	28.0	30.1	4.0	4.4	40.0	89.8
59	E1(m)	2 BED TOWNHOUSE	4	Yes	80.0	80.0	30.0	33.7	14.5	11.4	/	/	25.0	25.9	4.0	5.2	30.0	69.2
60	D1	3 BED TOWNHOUSE	4	Yes	92.0	92.0	30.0	32.2	13.0	10.0	7.1	/	28.0	30.1	4.0	4.4	40.0	96.3
61	D1(m)	3 BED TOWNHOUSE	4	Yes	92.0	92.0	30.0	32.2	13.0	10.0	7.1	/	28.0	30.1	4.0	4.4	40.0	94.1
62	E1(m)	2 BED TOWNHOUSE	4	Yes	80.0	80.0	30.0	33.7	14.5	11.4	/	/	25.0	25.9	4.0	5.2	30.0	60.6
63	D1	3 BED TOWNHOUSE	4	Yes	92.0	92.0	30.0	32.2	13.0	10.0	7.1	/	28.0	30.1	4.0	4.4	40.0	86.6
64	D1(m)	3 BED TOWNHOUSE	4	Yes	92.0	92.0	30.0	32.2	13.0	10.0	7.1	/	28.0	30.1	4.0	4.4	40.0	85.0
65	E1(m)	2 BED TOWNHOUSE	4	Yes	80.0	80.0	30.0	33.7	14.5	11.4	/	/	25.0	25.9	4.0	5.2	30.0	57.5
66	E1(m)	2 BED TOWNHOUSE	4	Yes	80.0	80.0	30.0	33.7	14.5	11.4	/	/	25.0	25.9	4.0	5.2	30.0	57.3
67	D1 C	3 BED TOWNHOUSE	4	Yes	92.0	92.0	30.0	32.2	13.0	10.0	7.1	/	28.0	30.1	4.0	4.4	40.0	66.8
68	F4(m)	4 BED TOWNHOUSE	7	Yes	120.0	154.0	40.0	56.3	13.4	12.1	11.4	7.3	43.0	44.2	6.0	6.9	50.0	62.5
69	E1	2 BED TOWNHOUSE	4	Yes	80.0	80.0	30.0	33.7	14.5	11.4	/	/	25.0	25.9	4.0	5.2	30.0	44.5
70	E1	2 BED TOWNHOUSE	4	Yes	80.0	80.0	30.0	33.7	14.5	11.4	/	/	25.0	25.9	4.0	5.2	30.0	44.5
71	D1	3 BED TOWNHOUSE	4	Yes	92.0	92.0	30.0	32.2	13.0	10.0	7.1	/	28.0	30.1	4.0	4.4	40.0	62.5
72	D1(m)	3 BED TOWNHOUSE	4	Yes	92.0	92.0	30.0	32.2	13.0	10.0	7.1	/	28.0	30.1	4.0	4.4	40.0	62.5
73	E1	2 BED TOWNHOUSE	4	Yes	80.0	80.0	30.0	33.7	14.5	11.4	/	/	25.0	25.9	4.0	5.2	30.0	44.5
74	E1	2 BED TOWNHOUSE	4	Yes	80.0	80.0	30.0	33.7	14.5	11.4	/	/	25.0	25.9	4.0	5.2	30.0	44.5
75	E1	2 BED TOWNHOUSE	4	Yes	80.0	80.0	30.0	33.7	14.5	11.4	/	/	25.0	25.9	4.0	5.2	30.0	44.5
76	D1	3 BED TOWNHOUSE	4	Yes	92.0	92.0	30.0	32.2	13.0	10.0	7.1	/	28.0	30.1	4.0	4.4	40.0	62.5
77	D1(m)	3 BED TOWNHOUSE	4	Yes	92.0	92.0	30.0	32.2	13.0	10.0	7.1	/	28.0	30.1	4.0	4.4	40.0	62.5
78	E1	2 BED TOWNHOUSE	4	Yes	80.0	80.0	30.0	33.7	14.5	11.4	/	/	25.0	25.9	4.0	5.2	30.0	44.5
79	E1	2 BED TOWNHOUSE	4	Yes	80.0	80.0	30.0	33.7	14.5	11.4	/	/	25.0	25.9	4.0	5.2	30.0	44.5
80	F4	4 BED TOWNHOUSE	7	Yes	120.0	154.0	40.0	56.3	13.4	12.1	11.4	7.3	43.0	44.2	6.0	6.9	50.0	55.8
81	F1(m)	3 BEDTOWNHOUSE	5	Yes	92.0	102.6	34.0	34.6	13.4	12.1	7.3	/	32.0	32.8	5.0	5.4	40.0	55.8
82	E1(m)	2 BED TOWNHOUSE	4	Yes	80.0	80.0	30.0	33.7	14.5	11.4	/	/	25.0	25.9	4.0	5.2	30.0	44.5
83	E1(m)	2 BED TOWNHOUSE	4	Yes	80.0	80.0	30.0	33.7	14.5	11.4	/	/	25.0	25.9	4.0	5.2	30.0	44.5
84	D1	3 BED TOWNHOUSE	4	Yes	92.0	92.0	30.0	32.2	13.0	10.0	7.1	/	28.0	30.1	4.0	4.4	40.0	62.5
85	D1(m)	3 BED TOWNHOUSE	4	Yes	92.0	92.0	30.0	32.2	13.0	10.0	7.1	/	28.0	30.1	4.0	4.4	40.0	62.5
86	E1(m)	2 BED TOWNHOUSE	4	Yes	80.0	80.0	30.0	33.7	14.5	11.4	/	/	25.0	25.9	4.0	5.2	30.0	44.5
87	E1(m)	2 BED TOWNHOUSE	4	Yes	80.0	80.0	30.0	33.7	14.5	11.4	/	/	25.0	25.9	4.0	5.2	30.0	44.5
88	E1(m)	2 BED TOWNHOUSE	4	Yes	80.0	80.0	30.0	33.7	14.5	11.4	/	/	25.0	25.9	4.0	5.2	30.0	44.5
89	D1	3 BED TOWNHOUSE	4	Yes	92.0	92.0	30.0	32.2	13.0	10.0	7.1	/	28.0	30.1	4.0	4.4	40.0	62.5
90	D1(m)	3 BED TOWNHOUSE	4	Yes	92.0	92.0	30.0	32.2	13.0	10.0	7.1	/	28.0	30.1	4.0	4.4	40.0	62.5
91	E1(m)	2 BED TOWNHOUSE	4	Yes	80.0	80.0	30.0	33.7	14.5	11.4	/	/	25.0	25.9	4.0	5.2	30.0	44.5
92	E1(m)	2 BED TOWNHOUSE	4	Yes	80.0	80.0	30.0	33.7	14.5	11.4	/	/	25.0	25.9	4.0	5.2	30.0	44.5
93	D1 C	3 BED TOWNHOUSE	4	Yes	92.0	92.0	30.0	32.2	13.0	10.0	7.1	/	28.0	30.1	4.0	4.4	40.0	62.5
116	F1(m)	3 BEDTOWNHOUSE	5	Yes	92.0	102.6	34.0	34.6	13.4	12.1	7.3	/	32.0	32.8	5.0	5.4	40.0	63.1
117	E1(m)	2 BED TOWNHOUSE	4	Yes	80.0	80.0	30.0	33.7	14.5	11.4	/	/	25.0	25.9	4.0	5.2	30.0	50.3
118	E1(m)	2 BED TOWNHOUSE	4	Yes	80.0	80.0	30.0	33.7	14.5	11.4	/	/	25.0	25.9	4.0	5.2	30.0	50.3
119	F4	4 BED TOWNHOUSE	7	Yes	120.0	154.0	40.0	56.3	13.4	12.1	11.4	7.3	43.0	44.2	6.0	6.9	50.0	76.9
120	F3	3 BED SEMI-DETACHED	5	Yes	92.0	109.7	34.0	34.1	13.5	13.0	7.6	/	32.0	34.1	5.0	5.6	40.0	91.3
121	F3(m)	3 BED SEMI-DETACHED	5	Yes	92.0	109.7	34.0	34.1	13.5	13.0	7.6	/	32.0	34.1	5.0	5.6	40.0	91.3
122	D1(m)	3 BED TOWNHOUSE	4	Yes	92.0	92.0	30.0	32.2	13.0	10.0	7.1	/	28.0	30.1	4.0	4.4	40.0	64.0
123	E1(m)	2 BED TOWNHOUSE	4	Yes	80.0	80.0	30.0	33.7	14.5	11.4	/	/	25.0	25.9	4.0	5.2	30.0	44.5
124	E1(m)	2 BED TOWNHOUSE	4	Yes	80.0	80.0	30.0	33.7	14.5	11.4	/	/	25.0	25.9	4.0	5.2	30.0	44.5
125	E1(m)	2 BED TOWNHOUSE	4	Yes	80.0	80.0	30.0	33.7	14.5	11.4	/	/	25.0	25.9	4.0	5.2	30.0	44.5
126	E1(m)	2 BED TOWNHOUSE	4	Yes	80.0	80.0	30.0	33.7	14.5	11.4	/	/	25.0	25.9	4.0	5.2	30.0	44.5
127	D1	3 BED TOWNHOUSE	4	Yes	92.0	92.0	30.0	32.2	13.0	10.0	7.1	/	28.0	30.1	4.0	4.4	40.0	68.2
128	D1C(m)	3 BED TOWNHOUSE	4	Yes	92.0	92.0	30.0	32.2	13.0	10.0	7.1	/	28.0	30.1	4.0	4.4	40.0	46.0

Schedule of Accomodation and Housing Quality Assesment

UNIT NO.	UNIT TYPE	DESCRIPTION	BED SPACES	DUAL ASPECT	MIN. UNIT AREA (m^2)	UNIT AREA (m^2)	MIN. AGG. LIVING AREA (m^2)	AGG. LIVING AREA (m^2)	BED 1 (m^2)	BED 2 (m^2)	BED 3 (m^2)	BED 4 (m^2)	MIN. AGG. BED AREA (m^2)	AGG. BED AREA (m^2)	MIN. STORAGE (m^2)	STORAGE (m^2)	MIN. PRIVATE AMENITY SPACE (m^2)	PRIVATE AMENITY SPACE (m^2)
129	E1(m)	2 BED TOWNHOUSE	4	Yes	80.0	80.0	30.0	33.7	14.5	11.4	/	/	25.0	25.9	4.0	5.2	30.0	39.6
130	D1	3 BED TOWNHOUSE	4	Yes	92.0	92.0	30.0	32.2	13.0	10.0	7.1	/	28.0	30.1	4.0	4.4	40.0	55.6
131	D1(m)	3 BED TOWNHOUSE	4	Yes	92.0	92.0	30.0	32.2	13.0	10.0	7.1	/	28.0	30.1	4.0	4.4	40.0	55.6
132	E1(m)	2 BED TOWNHOUSE	4	Yes	80.0	80.0	30.0	33.7	14.5	11.4	/	/	25.0	25.9	4.0	5.2	30.0	39.6
133	E1(m)	2 BED TOWNHOUSE	4	Yes	80.0	80.0	30.0	33.7	14.5	11.4	/	/	25.0	25.9	4.0	5.2	30.0	39.6
134	D1 C	3 BED TOWNHOUSE	4	Yes	92.0	92.0	30.0	32.2	13.0	10.0	7.1	/	28.0	30.1	4.0	4.4	40.0	46.0
135	D1(m)	3 BED TOWNHOUSE	4	Yes	92.0	92.0	30.0	32.2	13.0	10.0	7.1	/	28.0	30.1	4.0	4.4	40.0	72.9
136	E1	2 BED TOWNHOUSE	4	Yes	80.0	80.0	30.0	33.7	14.5	11.4	/	/	25.0	25.9	4.0	5.2	30.0	52.0
137	E1	2 BED TOWNHOUSE	4	Yes	80.0	80.0	30.0	33.7	14.5	11.4	/	/	25.0	25.9	4.0	5.2	30.0	52.0
138	E1	2 BED TOWNHOUSE	4	Yes	80.0	80.0	30.0	33.7	14.5	11.4	/	/	25.0	25.9	4.0	5.2	30.0	52.0
139	D1	3 BED TOWNHOUSE	4	Yes	92.0	92.0	30.0	32.2	13.0	10.0	7.1	/	28.0	30.1	4.0	4.4	40.0	72.9
140	D1(m)	3 BED TOWNHOUSE	4	Yes	92.0	92.0	30.0	32.2	13.0	10.0	7.1	/	28.0	30.1	4.0	4.4	40.0	72.9
141	E1	2 BED TOWNHOUSE	4	Yes	80.0	80.0	30.0	33.7	14.5	11.4	/	/	25.0	25.9	4.0	5.2	30.0	52.0
142	E1	2 BED TOWNHOUSE	4	Yes	80.0	80.0	30.0	33.7	14.5	11.4	/	/	25.0	25.9	4.0	5.2	30.0	52.0
143	E1	2 BED TOWNHOUSE	4	Yes	80.0	80.0	30.0	33.7	14.5	11.4	/	/	25.0	25.9	4.0	5.2	30.0	52.0
144	D1 C	3 BED TOWNHOUSE	4	Yes	92.0	92.0	30.0	32.2	13.0	10.0	7.1	/	28.0	30.1	4.0	4.4	40.0	76.0
145	D1	3 BED TOWNHOUSE	4	Yes	92.0	92.0	30.0	32.2	13.0	10.0	7.1	/	28.0	30.1	4.0	4.4	40.0	275.8
146	E1	2 BED TOWNHOUSE	4	Yes	80.0	80.0	30.0	33.7	14.5	11.4	/	/	25.0	25.9	4.0	5.2	30.0	59.0
147	E1	2 BED TOWNHOUSE	4	Yes	80.0	80.0	30.0	33.7	14.5	11.4	/	/	25.0	25.9	4.0	5.2	30.0	60.5
148	D1(m)	3 BED TOWNHOUSE	4	Yes	92.0	92.0	30.0	32.2	13.0	10.0	7.1	/	28.0	30.1	4.0	4.4	40.0	87.4
149	D1	3 BED TOWNHOUSE	4	Yes	92.0	92.0	30.0	32.2	13.0	10.0	7.1	/	28.0	30.1	4.0	4.4	40.0	90.3
150	E1	2 BED TOWNHOUSE	4	Yes	80.0	80.0	30.0	33.7	14.5	11.4	/	/	25.0	25.9	4.0	5.2	30.0	66.1
151	D1(m)	3 BED TOWNHOUSE	4	Yes	92.0	92.0	30.0	32.2	13.0	10.0	7.1	/	28.0	30.1	4.0	4.4	40.0	95.3
152	D1	3 BED TOWNHOUSE	4	Yes	92.0	92.0	30.0	32.2	13.0	10.0	7.1	/	28.0	30.1	4.0	4.4	40.0	98.2
153	E1	2 BED TOWNHOUSE	4	Yes	80.0	80.0	30.0	33.7	14.5	11.4	/	/	25.0	25.9	4.0	5.2	30.0	71.7
154	E1	2 BED TOWNHOUSE	4	Yes	80.0	80.0	30.0	33.7	14.5	11.4	/	/	25.0	25.9	4.0	5.2	30.0	73.2
155	D1(m)	3 BED TOWNHOUSE	4	Yes	92.0	92.0	30.0	32.2	13.0	10.0	7.1	/	28.0	30.1	4.0	4.4	40.0	208.1
156	F7(m)	4 BED DETACHED	7	Yes	120.0	156.2	40.0	54.7	13.0	11.8	11.6	7.6	43.0	44.0	6.0	8.0	50.0	67.1
157	D1(m)	3 BED TOWNHOUSE	4	Yes	92.0	92.0	30.0	32.2	13.0	10.0	7.1	/	28.0	30.1	4.0	4.4	40.0	62.5
158	E1	2 BED TOWNHOUSE	4	Yes	80.0	80.0	30.0	33.7	14.5	11.4	/	/	25.0	25.9	4.0	5.2	30.0	44.5
159	D1	3 BED TOWNHOUSE	4	Yes	92.0	92.0	30.0	32.2	13.0	10.0	7.1	/	28.0	30.1	4.0	4.4	40.0	62.5
160	D1(m)	3 BED TOWNHOUSE	4	Yes	92.0	92.0	30.0	32.2	13.0	10.0	7.1	/	28.0	30.1	4.0	4.4	40.0	62.5
161	E1	2 BED TOWNHOUSE	4	Yes	80.0	80.0	30.0	33.7	14.5	11.4	/	/	25.0	25.9	4.0	5.2	30.0	44.5
162	D1	3 BED TOWNHOUSE	4	Yes	92.0	92.0	30.0	32.2	13.0	10.0	7.1	/	28.0	30.1	4.0	4.4	40.0	62.5
163	D1(m)	3 BED TOWNHOUSE	4	Yes	92.0	92.0	30.0	32.2	13.0	10.0	7.1	/	28.0	30.1	4.0	4.4	40.0	62.5
164	E1	2 BED TOWNHOUSE	4	Yes	80.0	80.0	30.0	33.7	14.5	11.4	/	/	25.0	25.9	4.0	5.2	30.0	44.5
165	D1	3 BED TOWNHOUSE	4	Yes	92.0	92.0	30.0	32.2	13.0	10.0	7.1	/	28.0	30.1	4.0	4.4	40.0	62.5
166	D1(m)	3 BED TOWNHOUSE	4	Yes	92.0	92.0	30.0	32.2	13.0	10.0	7.1	/	28.0	30.1	4.0	4.4	40.0	62.5
167	E1	2 BED TOWNHOUSE	4	Yes	80.0	80.0	30.0	33.7	14.5	11.4	/	/	25.0	25.9	4.0	5.2	30.0	44.5
168	F4	4 BED TOWNHOUSE	7	Yes	120.0	154.0	40.0	53.5	13.4	12.1	11.4	7.3	43.0	44.2	6.0	6.9	50.0	55.8
169	F1(m)	3 BEDTOWNHOUSE	5	Yes	92.0	102.6	34.0	34.6	13.4	12.1	7.3	/	32.0	32.8	5.0	5.4	40.0	55.8
170	E1(m)	2 BED TOWNHOUSE	4	Yes	80.0	80.0	30.0	33.7	14.5	11.4	/	/	25.0	25.9	4.0	5.2	30.0	44.5
171	D1	3 BED TOWNHOUSE	4	Yes	92.0	92.0	30.0	32.2	13.0	10.0	7.1	/	28.0	30.1	4.0	4.4	40.0	62.5
172	D1(m)	3 BED TOWNHOUSE	4	Yes	92.0	92.0	30.0	32.2	13.0	10.0	7.1	/	28.0	30.1	4.0	4.4	40.0	62.5
173	E1(m)	2 BED TOWNHOUSE	4	Yes	80.0	80.0	30.0	33.7	14.5	11.4	/	/	25.0	25.9	4.0	5.2	30.0	44.5
174	D1	3 BED TOWNHOUSE	4	Yes	92.0	92.0	30.0	32.2	13.0	10.0	7.1	/	28.0	30.1	4.0	4.4	40.0	62.5
175	D1(m)	3 BED TOWNHOUSE	4	Yes	92.0	92.0	30.0	32.2	13.0	10.0	7.1	/	28.0	30.1	4.0	4.4	40.0	62.5
176	E1(m)	2 BED TOWNHOUSE	4	Yes	80.0	80.0	30.0	33.7	14.5	11.4	/	/	25.0	25.9	4.0	5.2	30.0	44.5
177	D1	3 BED TOWNHOUSE	4	Yes	92.0	92.0	30.0	32.2	13.0	10.0	7.1	/	28.0	30.1	4.0	4.4	40.0	62.5
178	D1(m)	3 BED TOWNHOUSE	4	Yes	92.0	92.0	30.0	32.2	13.0	10.0	7.1	/	28.0	30.1	4.0	4.4	40.0	62.5
179	E1(m)	2 BED TOWNHOUSE	4	Yes	80.0	80.0	30.0	33.7	14.5	11.4	/	/	25.0	25.9	4.0	5.2	30.0	44.5
180	D1	3 BED TOWNHOUSE	4	Yes	92.0	92.0	30.0	32.2	13.0	10.0	7.1	/	28.0	30.1	4.0	4.4	40.0	62.5
181	F2	3 BED SEMI-DETACHED	5	Yes	92.0	104.1	34.0	35.1	13.0	11.8	7.6	/	32.0	32.4	5.0	5.7	40.0	54.5
182	F3(m)	3 BED SEMI-DETACHED	5	Yes	92.0	109.7	34.0	34.1	13.5	13.0	7.6	/	32.0	34.1	5.0	5.6	40.0	66.0

Schedule of Accomodation and Housing Quality Assesment

UNIT NO.	UNIT TYPE	DESCRIPTION	BED SPACES	DUAL ASPECT	MIN. UNIT AREA (m^2)	UNIT AREA (m^2)	MIN. AGG. LIVING AREA (m^2)	AGG. LIVING AREA (m^2)	BED 1 (m^2)	BED 2 (m^2)	BED 3 (m^2)	BED 4 (m^2)	MIN. AGG. BED AREA (m^2)	AGG. BED AREA (m^2)	MIN. STORAGE (m^2)	STORAGE (m^2)	MIN. PRIVATE AMENITY SPACE (m^2)	PRIVATE AMENITY SPACE (m^2)
HOUSING																		
183	F4(m)	4 BED TOWNHOUSE	7	Yes	120.0	154.0	40.0	56.3	13.4	12.1	11.4	7.3	43.0	44.2	6.0	6.9	50.0	55.8
184	E1(m)	2 BED TOWNHOUSE	4	Yes	80.0	80.0	30.0	33.7	14.5	11.4	/	/	25.0	25.9	4.0	5.2	30.0	44.5
185	E1(m)	2 BED TOWNHOUSE	4	Yes	80.0	80.0	30.0	33.7	14.5	11.4	/	/	25.0	25.9	4.0	5.2	30.0	44.5
186	D1	3 BED TOWNHOUSE	4	Yes	92.0	92.0	30.0	32.2	13.0	10.0	7.1	/	28.0	30.1	4.0	4.4	40.0	62.5
187	D1(m)	3 BED TOWNHOUSE	4	Yes	92.0	92.0	30.0	32.2	13.0	10.0	7.1	/	28.0	30.1	4.0	4.4	40.0	62.5
188	E1(m)	2 BED TOWNHOUSE	4	Yes	80.0	80.0	30.0	33.7	14.5	11.4	/	/	25.0	25.9	4.0	5.2	30.0	44.5
189	D1	3 BED TOWNHOUSE	4	Yes	92.0	92.0	30.0	32.2	13.0	10.0	7.1	/	28.0	30.1	4.0	4.4	40.0	62.5
190	D1(m)	3 BED TOWNHOUSE	4	Yes	92.0	92.0	30.0	32.2	13.0	10.0	7.1	/	28.0	30.1	4.0	4.4	40.0	62.5
191	E1(m)	2 BED TOWNHOUSE	4	Yes	80.0	80.0	30.0	33.7	14.5	11.4	/	/	25.0	25.9	4.0	5.2	30.0	44.5
192	D1	3 BED TOWNHOUSE	4	Yes	92.0	92.0	30.0	32.2	13.0	10.0	7.1	/	28.0	30.1	4.0	4.4	40.0	62.5
193	D1(m)	3 BED TOWNHOUSE	4	Yes	92.0	92.0	30.0	32.2	13.0	10.0	7.1	/	28.0	30.1	4.0	4.4	40.0	62.5
194	E1(m)	2 BED TOWNHOUSE	4	Yes	80.0	80.0	30.0	33.7	14.5	11.4	/	/	25.0	25.9	4.0	5.2	30.0	44.5
195	E1(m)	2 BED TOWNHOUSE	4	Yes	80.0	80.0	30.0	33.7	14.5	11.4	/	/	25.0	25.9	4.0	5.2	30.0	44.5
196	D1	3 BED TOWNHOUSE	4	Yes	92.0	92.0	30.0	32.2	13.0	10.0	7.1	/	28.0	30.1	4.0	4.4	40.0	62.5
197	F7	4 BED DETACHED	7	Yes	120.0	156.2	40.0	54.7	13.0	11.8	11.6	7.6	43.0	44.0	6.0	8.0	50.0	69.3
198	F3	3 BED SEMI-DETACHED	5	Yes	92.0	109.7	34.0	34.1	13.5	13.0	7.6	/	32.0	34.1	5.0	5.6	40.0	68.7
199	F5(m)	4 BED SEMI-DETACHED	7	Yes	120.0	156.2	40.0	54.7	13.0	11.8	11.6	7.6	43.0	44.0	6.0	8.0	50.0	55.0
200	D1(m)	3 BED TOWNHOUSE	4	Yes	92.0	92.0	30.0	32.2	13.0	10.0	7.1	/	28.0	30.1	4.0	4.4	40.0	62.5
201	E1	2 BED TOWNHOUSE	4	Yes	80.0	80.0	30.0	33.7	14.5	11.4	/	/	25.0	25.9	4.0	5.2	30.0	44.5
202	E1	2 BED TOWNHOUSE	4	Yes	80.0	80.0	30.0	33.7	14.5	11.4	/	/	25.0	25.9	4.0	5.2	30.0	44.5
203	D1	3 BED TOWNHOUSE	4	Yes	92.0	92.0	30.0	32.2	13.0	10.0	7.1	/	28.0	30.1	4.0	4.4	40.0	62.5
204	D1(m)	3 BED TOWNHOUSE	4	Yes	92.0	92.0	30.0	32.2	13.0	10.0	7.1	/	28.0	30.1	4.0	4.4	40.0	62.5
205	E1	2 BED TOWNHOUSE	4	Yes	80.0	80.0	30.0	33.7	14.5	11.4	/	/	25.0	25.9	4.0	5.2	30.0	44.5
206	D1	3 BED TOWNHOUSE	4	Yes	92.0	92.0	30.0	32.2	13.0	10.0	7.1	/	28.0	30.1	4.0	4.4	40.0	62.5
207	D1(m)	3 BED TOWNHOUSE	4	Yes	92.0	92.0	30.0	32.2	13.0	10.0	7.1	/	28.0	30.1	4.0	4.4	40.0	62.5
208	E1	2 BED TOWNHOUSE	4	Yes	80.0	80.0	30.0	33.7	14.5	11.4	/	/	25.0	25.9	4.0	5.2	30.0	44.5
209	D1	3 BED TOWNHOUSE	4	Yes	92.0	92.0	30.0	32.2	13.0	10.0	7.1	/	28.0	30.1	4.0	4.4	40.0	62.5
210	D1(m)	3 BED TOWNHOUSE	4	Yes	92.0	92.0	30.0	32.2	13.0	10.0	7.1	/	28.0	30.1	4.0	4.4	40.0	62.5
211	E1	2 BED TOWNHOUSE	4	Yes	80.0	80.0	30.0	33.7	14.5	11.4	/	/	25.0	25.9	4.0	5.2	30.0	44.5
212	E1	2 BED TOWNHOUSE	4	Yes	80.0	80.0	30.0	33.7	14.5	11.4	/	/	25.0	25.9	4.0	5.2	30.0	44.5
213	F1	3 BEDTOWNHOUSE	5	Yes	92.0	102.6	34.0	34.6	13.4	12.1	7.3	/	32.0	32.8	5.0	5.4	40.0	55.8
214	D1(m)	3 BED TOWNHOUSE	4	Yes	92.0	92.0	30.0	32.2	13.0	10.0	7.1	/	28.0	30.1	4.0	4.4	40.0	79.3
215	E1(m)	2 BED TOWNHOUSE	4	Yes	80.0	80.0	30.0	33.7	14.5	11.4	/	/	25.0	25.9	4.0	5.2	30.0	44.3
216	E1(m)	2 BED TOWNHOUSE	4	Yes	80.0	80.0	30.0	33.7	14.5	11.4	/	/	25.0	25.9	4.0	5.2	30.0	44.3
217	D1	3 BED TOWNHOUSE	4	Yes	92.0	92.0	30.0	32.2	13.0	10.0	7.1	/	28.0	30.1	4.0	4.4	40.0	62.9
218	D1(m)	3 BED TOWNHOUSE	4	Yes	92.0	92.0	30.0	32.2	13.0	10.0	7.1	/	28.0	30.1	4.0	4.4	40.0	62.1
219	E1(m)	2 BED TOWNHOUSE	4	Yes	80.0	80.0	30.0	33.7	14.5	11.4	/	/	25.0	25.9	4.0	5.2	30.0	44.3
220	E1(m)	2 BED TOWNHOUSE	4	Yes	80.0	80.0	30.0	33.7	14.5	11.4	/	/	25.0	25.9	4.0	5.2	30.0	44.3
221	D1	3 BED TOWNHOUSE	4	Yes	92.0	92.0	30.0	32.2	13.0	10.0	7.1	/	28.0	30.1	4.0	4.4	40.0	62.2
222	D1(m)	3 BED TOWNHOUSE	4	Yes	92.0	92.0	30.0	32.2	13.0	10.0	7.1	/	28.0	30.1	4.0	4.4	40.0	62.7
223	E1(m)	2 BED TOWNHOUSE	4	Yes	80.0	80.0	30.0	33.7	14.5	11.4	/	/	25.0	25.9	4.0	5.2	30.0	44.3
224	E1(m)	2 BED TOWNHOUSE	4	Yes	80.0	80.0	30.0	33.7	14.5	11.4	/	/	25.0	25.9	4.0	5.2	30.0	44.3
225	E1(m)	2 BED TOWNHOUSE	4	Yes	80.0	80.0	30.0	33.7	14.5	11.4	/	/	25.0	25.9	4.0	5.2	30.0	44.4
226	D1	3 BED TOWNHOUSE	4	Yes	92.0	92.0	30.0	32.2	13.0	10.0	7.1	/	28.0	30.1	4.0	4.4	40.0	64.0
227	D1(m)	3 BED TOWNHOUSE	4	Yes	92.0	92.0	30.0	32.2	13.0	10.0	7.1	/	28.0	30.1	4.0	4.4	40.0	63.9
228	E1(m)	2 BED TOWNHOUSE	4	Yes	80.0	80.0	30.0	33.7	14.5	11.4	/	/	25.0	25.9	4.0	5.2	30.0	44.1
229	E1(m)	2 BED TOWNHOUSE	4	Yes	80.0	80.0	30.0	33.7	14.5	11.4	/	/	25.0	25.9	4.0	5.2	30.0	44.3
230	E1(m)	2 BED TOWNHOUSE	4	Yes	80.0	80.0	30.0	33.7	14.5	11.4	/	/	25.0	25.9	4.0	5.2	30.0	44.3
231	D1	3 BED TOWNHOUSE	4	Yes	92.0	92.0	30.0	32.2	13.0	10.0	7.1	/	28.0	30.1	4.0	4.4	40.0	68.5
232	D1(m)	3 BED TOWNHOUSE	4	Yes	92.0	92.0	30.0	32.2	13.0	10.0	7.1	/	28.0	30.1	4.0	4.4	40.0	68.1
233	E1(m)	2 BED TOWNHOUSE	4	Yes	80.0	80.0	30.0	33.7	14.5	11.4	/	/	25.0	25.9	4.0	5.2	30.0	44.5
234	E1(m)	2 BED TOWNHOUSE	4	Yes	80.0	80.0	30.0	33.7	14.5	11.4	/	/	25.0	25.9	4.0	5.2	30.0	44.5
235	E1(m)	2 BED TOWNHOUSE	4	Yes	80.0	80.0	30.0	33.7	14.5	11.4	/	/	25.0	25.9	4.0	5.2	30.0	44.5
236	D1	3 BED TOWNHOUSE	4	Yes	92.0	92.0	30.0	32.2	13.0	10.0	7.1	/	28.0	30.1	4.0	4.4	40.0	66.6

Schedule of Accomodation and Housing Quality Assesment

UNIT NO.	UNIT TYPE	DESCRIPTION	BED SPACES	DUAL ASPECT	MIN. UNIT AREA (m^2)	UNIT AREA (m^2)	MIN. AGG. LIVING AREA (m^2)	AGG. LIVING AREA (m^2)	BED 1 (m^2)	BED 2 (m^2)	BED 3 (m^2)	BED 4 (m^2)	MIN. AGG. BED AREA (m^2)	AGG. BED AREA (m^2)	MIN. STORAGE (m^2)	STORAGE (m^2)	MIN. PRIVATE AMENITY SPACE (m^2)	PRIVATE AMENITY SPACE (m^2)
HOUSING																		
237	D1(m)	3 BED TOWNHOUSE	4	Yes	92.0	92.0	30.0	32.2	13.0	10.0	7.1	/	28.0	30.1	4.0	4.4	40.0	66.6
238	E1(m)	2 BED TOWNHOUSE	4	Yes	80.0	80.0	30.0	33.7	14.5	11.4	/	/	25.0	25.9	4.0	5.2	30.0	44.5
239	E1(m)	2 BED TOWNHOUSE	4	Yes	80.0	80.0	30.0	33.7	14.5	11.4	/	/	25.0	25.9	4.0	5.2	30.0	44.5
240	D1	3 BED TOWNHOUSE	4	Yes	92.0	92.0	30.0	32.2	13.0	10.0	7.1	/	28.0	30.1	4.0	4.4	40.0	126.1
241	F5	4 BED SEMI-DETACHED	7	Yes	120.0	156.2	40.0	54.7	13.0	11.8	11.6	7.6	43.0	44.0	6.0	8.0	50.0	59.3
242	F3(m)	3 BED SEMI-DETACHED	5	Yes	92.0	109.7	34.0	34.1	13.5	13.0	7.6	/	32.0	34.1	5.0	5.6	40.0	63.0
243	F7 (m)	4 BED DETACHED	7	Yes	120.0	156.2	40.0	54.7	13.0	11.8	11.6	7.6	43.0	44.0	6.0	8.0	50.0	64.2
244	D1(m)	3 BED TOWNHOUSE	4	Yes	92.0	92.0	30.0	32.2	13.0	10.0	7.1	/	28.0	30.1	4.0	4.4	40.0	70.5
245	E1	2 BED TOWNHOUSE	4	Yes	80.0	80.0	30.0	33.7	14.5	11.4	/	/	25.0	25.9	4.0	5.2	30.0	59.5
246	E1	2 BED TOWNHOUSE	4	Yes	80.0	80.0	30.0	33.7	14.5	11.4	/	/	25.0	25.9	4.0	5.2	30.0	67.3
247	D1	3 BED TOWNHOUSE	4	Yes	92.0	92.0	30.0	32.2	13.0	10.0	7.1	/	28.0	30.1	4.0	4.4	40.0	107.4
248	D1(m)	3 BED TOWNHOUSE	4	Yes	92.0	92.0	30.0	32.2	13.0	10.0	7.1	/	28.0	30.1	4.0	4.4	40.0	122.8
249	E1	2 BED TOWNHOUSE	4	Yes	80.0	80.0	30.0	33.7	14.5	11.4	/	/	25.0	25.9	4.0	5.2	30.0	98.2
250	E1	2 BED TOWNHOUSE	4	Yes	80.0	80.0	30.0	33.7	14.5	11.4	/	/	25.0	25.9	4.0	5.2	30.0	107.7
251	D1	3 BED TOWNHOUSE	4	Yes	92.0	92.0	30.0	32.2	13.0	10.0	7.1	/	28.0	30.1	4.0	4.4	40.0	164.6
252	F4(m)	4 BED TOWNHOUSE	7	Yes	120.0	154.0	40.0	56.3	13.4	12.1	11.4	7.3	43.0	44.2	6.0	6.9	50.0	50.3
253	E1	2 BED TOWNHOUSE	4	Yes	80.0	80.0	30.0	33.7	14.5	11.4	/	/	25.0	25.9	4.0	5.2	30.0	40.1
254	E1	2 BED TOWNHOUSE	4	Yes	80.0	80.0	30.0	33.7	14.5	11.4	/	/	25.0	25.9	4.0	5.2	30.0	40.1
255	D1	3 BED TOWNHOUSE	4	Yes	92.0	92.0	30.0	32.2	13.0	10.0	7.1	/	28.0	30.1	4.0	4.4	40.0	246.1
256	D1(m)	3 BED TOWNHOUSE	4	Yes	92.0	92.0	30.0	32.2	13.0	10.0	7.1	/	28.0	30.1	4.0	4.4	40.0	225.4
257	E1	2 BED TOWNHOUSE	4	Yes	80.0	80.0	30.0	33.7	14.5	11.4	/	/	25.0	25.9	4.0	5.2	30.0	46.7
258	E1	2 BED TOWNHOUSE	4	Yes	80.0	80.0	30.0	33.7	14.5	11.4	/	/	25.0	25.9	4.0	5.2	30.0	46.1
259	D1	3 BED TOWNHOUSE	4	Yes	92.0	92.0	30.0	32.2	13.0	10.0	7.1	/	28.0	30.1	4.0	4.4	40.0	63.5
260	D1(m)	3 BED TOWNHOUSE	4	Yes	92.0	92.0	30.0	32.2	13.0	10.0	7.1	/	28.0	30.1	4.0	4.4	40.0	62.6
261	E1	2 BED TOWNHOUSE	4	Yes	80.0	80.0	30.0	33.7	14.5	11.4	/	/	25.0	25.9	4.0	5.2	30.0	44.6
262	E1	2 BED TOWNHOUSE	4	Yes	80.0	80.0	30.0	33.7	14.5	11.4	/	/	25.0	25.9	4.0	5.2	30.0	44.6
263	D1	3 BED TOWNHOUSE	4	Yes	92.0	92.0	30.0	32.2	13.0	10.0	7.1	/	28.0	30.1	4.0	4.4	40.0	62.5
264	D1(m)	3 BED TOWNHOUSE	4	Yes	92.0	92.0	30.0	32.2	13.0	10.0	7.1	/	28.0	30.1	4.0	4.4	40.0	62.5
265	E1	2 BED TOWNHOUSE	4	Yes	80.0	80.0	30.0	33.7	14.5	11.4	/	/	25.0	25.9	4.0	5.2	30.0	44.5
266	E1	2 BED TOWNHOUSE	4	Yes	80.0	80.0	30.0	33.7	14.5	11.4	/	/	25.0	25.9	4.0	5.2	30.0	44.5
267	D1	3 BED TOWNHOUSE	4	Yes	92.0	92.0	30.0	32.2	13.0	10.0	7.1	/	28.0	30.1	4.0	4.4	40.0	62.5
268	D1(m)	3 BED TOWNHOUSE	4	Yes	92.0	92.0	30.0	32.2	13.0	10.0	7.1	/	28.0	30.1	4.0	4.4	40.0	62.5
269	E1	2 BED TOWNHOUSE	4	Yes	80.0	80.0	30.0	33.7	14.5	11.4	/	/	25.0	25.9	4.0	5.2	30.0	44.5
270	E1	2 BED TOWNHOUSE	4	Yes	80.0	80.0	30.0	33.7	14.5	11.4	/	/	25.0	25.9	4.0	5.2	30.0	44.5
271	D1	3 BED TOWNHOUSE	4	Yes	92.0	92.0	30.0	32.2	13.0	10.0	7.1	/	28.0	30.1	4.0	4.4	40.0	144.7
272	F7 (m)	4 BED DETACHED	7	Yes	120.0	156.2	40.0	54.7	13.0	11.8	11.6	7.6	43.0	44.0	6.0	8.0	50.0	62.6
273	D1(m)	3 BED TOWNHOUSE	4	Yes	92.0	92.0	30.0	32.2	13.0	10.0	7.1	/	28.0	30.1	4.0	4.4	40.0	86.6
274	E1	2 BED TOWNHOUSE	4	Yes	80.0	80.0	30.0	33.7	14.5	11.4	/	/	25.0	25.9	4.0	5.2	30.0	44.5
275	E1	2 BED TOWNHOUSE	4	Yes	80.0	80.0	30.0	33.7	14.5	11.4	/	/	25.0	25.9	4.0	5.2	30.0	44.5
276	D1	3 BED TOWNHOUSE	4	Yes	92.0	92.0	30.0	32.2	13.0	10.0	7.1	/	28.0	30.1	4.0	4.4	40.0	70.6
277	D1(m)	3 BED TOWNHOUSE	4	Yes	92.0	92.0	30.0	32.2	13.0	10.0	7.1	/	28.0	30.1	4.0	4.4	40.0	70.6
278	E1	2 BED TOWNHOUSE	4	Yes	80.0	80.0	30.0	33.7	14.5	11.4	/	/	25.0	25.9	4.0	5.2	30.0	44.5
279	D1	3 BED TOWNHOUSE	4	Yes	92.0	92.0	30.0	32.2	13.0	10.0	7.1	/	28.0	30.1	4.0	4.4	40.0	70.6
280	D1(m)	3 BED TOWNHOUSE	4	Yes	92.0	92.0	30.0	32.2	13.0	10.0	7.1	/	28.0	30.1	4.0	4.4	40.0	70.6
281	E1	2 BED TOWNHOUSE	4	Yes	80.0	80.0	30.0	33.7	14.5	11.4	/	/	25.0	25.9	4.0	5.2	30.0	44.5
282	E1	2 BED TOWNHOUSE	4	Yes	80.0	80.0	30.0	33.7	14.5	11.4	/	/	25.0	25.9	4.0	5.2	30.0	44.5
283	D1	3 BED TOWNHOUSE	4	Yes	92.0	92.0	30.0	32.2	13.0	10.0	7.1	/	28.0	30.1	4.0	4.4	40.0	70.6
284	D1(m)	3 BED TOWNHOUSE	4	Yes	92.0	92.0	30.0	32.2	13.0	10.0	7.1	/	28.0	30.1	4.0	4.4	40.0	70.6
285	E1	2 BED TOWNHOUSE	4	Yes	80.0	80.0	30.0	33.7	14.5	11.4	/	/	25.0	25.9	4.0	5.2	30.0	44.5
286	D1	3 BED TOWNHOUSE	4	Yes	92.0	92.0	30.0	32.2	13.0	10.0	7.1	/	28.0	30.1	4.0	4.4	40.0	70.0
287	D1(m)	3 BED TOWNHOUSE	4	Yes	92.0	92.0	30.0	32.2	13.0	10.0	7.1	/	28.0	30.1	4.0	4.4	40.0	70.0
288	E1	2 BED TOWNHOUSE	4	Yes	80.0	80.0	30.0	33.7	14.5	11.4	/	/	25.0	25.9	4.0	5.2	30.0	44.5
289	E1	2 BED TOWNHOUSE	4	Yes	80.0	80.0	30.0	33.7	14.5	11.4	/	/	25.0	25.9	4.0	5.2	30.0	44.5
290	D1	3 BED TOWNHOUSE	4	Yes	92.0	92.0	30.0	32.2	13.0	10.0	7.1	/	28.0	30.1	4.0	4.4	40.0	67.8

Schedule of Accomodation and Housing Quality Assesment

UNIT NO.	UNIT TYPE	DESCRIPTION	BED SPACES	DUAL ASPECT	MIN. UNIT AREA (m^2)	UNIT AREA (m^2)	MIN. AGG. LIVING AREA (m^2)	AGG. LIVING AREA (m^2)	BED 1 (m^2)	BED 2 (m^2)	BED 3 (m^2)	BED 4 (m^2)	MIN. AGG. BED AREA (m^2)	AGG. BED AREA (m^2)	MIN. STORAGE (m^2)	STORAGE (m^2)	MIN. PRIVATE AMENITY SPACE (m^2)	PRIVATE AMENITY SPACE (m^2)
HOUSING																		
291	F7	4 BED DETACHED	7	Yes	120.0	156.2	40.0	54.7	13.0	11.8	11.6	7.6	43.0	44.0	6.0	8.0	50.0	64.3
292	F3	3 BED SEMI-DETACHED	5	Yes	92.0	109.7	34.0	34.1	13.5	13.0	7.6	/	32.0	34.1	5.0	5.6	40.0	67.6
293	F2(m)	3 BED SEMI-DETACHED	5	Yes	92.0	104.1	34.0	35.1	13.0	11.8	7.6	/	32.0	32.4	5.0	5.7	40.0	54.8
294	D1(m)	3 BED TOWNHOUSE	4	Yes	92.0	92.0	30.0	30.7	13.0	10.0	7.1	/	28.0	30.1	4.0	4.5	40.0	62.5
295	E1(m)	2 BED TOWNHOUSE	4	Yes	80.0	80.0	30.0	33.7	14.5	11.4	/	/	25.0	25.9	4.0	5.2	30.0	44.6
296	E1(m)	2 BED TOWNHOUSE	4	Yes	80.0	80.0	30.0	33.7	14.5	11.4	/	/	25.0	25.9	4.0	5.2	30.0	44.7
297	D1	3 BED TOWNHOUSE	4	Yes	92.0	92.0	30.0	32.2	13.0	10.0	7.1	/	28.0	30.1	4.0	4.4	40.0	60.9
298	D1(m)	3 BED TOWNHOUSE	4	Yes	92.0	92.0	30.0	32.2	13.0	10.0	7.1	/	28.0	30.1	4.0	4.4	40.0	60.0
299	E1(m)	2 BED TOWNHOUSE	4	Yes	80.0	80.0	30.0	33.7	14.5	11.4	/	/	25.0	25.9	4.0	5.2	30.0	44.5
300	D1	3 BED TOWNHOUSE	4	Yes	92.0	92.0	30.0	32.2	13.0	10.0	7.1	/	28.0	30.1	4.0	4.4	40.0	61.0
301	D1(m)	3 BED TOWNHOUSE	4	Yes	92.0	92.0	30.0	32.2	13.0	10.0	7.1	/	28.0	30.1	4.0	4.4	40.0	59.8
302	E1(m)	2 BED TOWNHOUSE	4	Yes	80.0	80.0	30.0	33.7	14.5	11.4	/	/	25.0	25.9	4.0	5.2	30.0	43.7
303	E1(m)	2 BED TOWNHOUSE	4	Yes	80.0	80.0	30.0	33.7	14.5	11.4	/	/	25.0	25.9	4.0	5.2	30.0	44.6
304	D1	3 BED TOWNHOUSE	4	Yes	92.0	92.0	30.0	32.2	13.0	10.0	7.1	/	28.0	30.1	4.0	4.4	40.0	62.4
305	D1(m)	3 BED TOWNHOUSE	4	Yes	92.0	92.0	30.0	32.2	13.0	10.0	7.1	/	28.0	30.1	4.0	4.4	40.0	61.5
306	E1(m)	2 BED TOWNHOUSE	4	Yes	80.0	80.0	30.0	33.7	14.5	11.4	/	/	25.0	25.9	4.0	5.2	30.0	43.6
307	D1	3 BED TOWNHOUSE	4	Yes	92.0	92.0	30.0	32.2	13.0	10.0	7.1	/	28.0	30.1	4.0	4.4	40.0	61.1
308	D1(m)	3 BED TOWNHOUSE	4	Yes	92.0	92.0	30.0	32.2	13.0	10.0	7.1	/	28.0	30.1	4.0	4.4	40.0	61.3
309	E1(m)	2 BED TOWNHOUSE	4	Yes	80.0	80.0	30.0	33.7	14.5	11.4	/	/	25.0	25.9	4.0	5.2	30.0	43.9
310	D1	3 BED TOWNHOUSE	4	Yes	92.0	92.0	30.0	32.2	13.0	10.0	7.1	/	28.0	30.1	4.0	4.4	40.0	61.0
311	D1(m)	3 BED TOWNHOUSE	4	Yes	92.0	92.0	30.0	32.2	13.0	10.0	7.1	/	28.0	30.1	4.0	4.4	40.0	60.9
312	E1(m)	2 BED TOWNHOUSE	4	Yes	80.0	80.0	30.0	33.7	14.5	11.4	/	/	25.0	25.9	4.0	5.2	30.0	44.8
313	E1(m)	2 BED TOWNHOUSE	4	Yes	80.0	80.0	30.0	33.7	14.5	11.4	/	/	25.0	25.9	4.0	5.2	30.0	44.2
314	D1	3 BED TOWNHOUSE	4	Yes	92.0	92.0	30.0	32.2	13.0	10.0	7.1	/	28.0	30.1	4.0	4.4	40.0	57.6
315	F2	3 BED SEMI-DETACHED	5	Yes	92.0	104.1	34.0	35.1	13.0	11.8	7.6	/	32.0	32.4	5.0	5.7	40.0	54.5
316	F3(m)	3 BED SEMI-DETACHED	5	Yes	92.0	109.7	34.0	34.1	13.5	13.0	7.6	/	32.0	34.1	5.0	5.6	40.0	61.4
317	F7 (m)	4 BED DETACHED	7	Yes	120.0	156.2	40.0	54.7	13.0	11.8	11.6	7.6	43.0	44.0	6.0	8.0	50.0	71.1
318	D1(m)	3 BED TOWNHOUSE	4	Yes	92.0	92.0	30.0	32.2	13.0	10.0	7.1	/	28.0	30.1	4.0	4.4	40.0	62.5
319	E1	2 BED TOWNHOUSE	4	Yes	80.0	80.0	30.0	33.7	14.5	11.4	/	/	25.0	25.9	4.0	5.2	30.0	44.5
320	E1	2 BED TOWNHOUSE	4	Yes	80.0	80.0	30.0	33.7	14.5	11.4	/	/	25.0	25.9	4.0	5.2	30.0	44.5
321	D1	3 BED TOWNHOUSE	4	Yes	92.0	92.0	30.0	32.2	13.0	10.0	7.1	/	28.0	30.1	4.0	4.4	40.0	62.5
322	D1(m)	3 BED TOWNHOUSE	4	Yes	92.0	92.0	30.0	32.2	13.0	10.0	7.1	/	28.0	30.1	4.0	4.4	40.0	62.5
323	E1	2 BED TOWNHOUSE	4	Yes	80.0	80.0	30.0	33.7	14.5	11.4	/	/	25.0	25.9	4.0	5.2	30.0	44.5
324	D1	3 BED TOWNHOUSE	4	Yes	92.0	92.0	30.0	32.2	13.0	10.0	7.1	/	28.0	30.1	4.0	4.4	40.0	62.5
325	D1(m)	3 BED TOWNHOUSE	4	Yes	92.0	92.0	30.0	32.2	13.0	10.0	7.1	/	28.0	30.1	4.0	4.4	40.0	62.5
326	E1	2 BED TOWNHOUSE	4	Yes	80.0	80.0	30.0	33.7	14.5	11.4	/	/	25.0	25.9	4.0	5.2	30.0	44.5
327	D1	3 BED TOWNHOUSE	4	Yes	92.0	92.0	30.0	32.2	13.0	10.0	7.1	/	28.0	30.1	4.0	4.4	40.0	62.5
328	D1(m)	3 BED TOWNHOUSE	4	Yes	92.0	92.0	30.0	32.2	13.0	10.0	7.1	/	28.0	30.1	4.0	4.4	40.0	62.5
329	E1	2 BED TOWNHOUSE	4	Yes	80.0	80.0	30.0	33.7	14.5	11.4	/	/	25.0	25.9	4.0	5.2	30.0	42.4
330	D1	3 BED TOWNHOUSE	4	Yes	92.0	92.0	30.0	32.2	13.0	10.0	7.1	/	28.0	30.1	4.0	4.4	40.0	84.1
331	D1(m)	3 BED TOWNHOUSE	4	Yes	92.0	92.0	30.0	32.2	13.0	10.0	7.1	/	28.0	30.1	4.0	4.4	40.0	104.7
332	E1	2 BED TOWNHOUSE	4	Yes	80.0	80.0	30.0	33.7	14.5	11.4	/	/	25.0	25.9	4.0	5.2	30.0	60.1
333	D1	3 BED TOWNHOUSE	4	Yes	92.0	92.0	30.0	32.2	13.0	10.0	7.1	/	28.0	30.1	4.0	4.4	40.0	84.4
334	F5	4 BED SEMI-DETACHED	7	Yes	120.0	156.2	40.0	54.7	13.0	11.8	11.6	7.6	43.0	44.0	6.0	8.0	50.0	54.9
335	F3(m)	3 BED SEMI-DETACHED	5	Yes	92.0	109.7	34.0	34.1	13.5	13.0	7.6	/	32.0	34.1	5.0	5.6	40.0	66.0
336	F4(m)	4 BED TOWNHOUSE	7	Yes	120.0	154.0	40.0	56.3	13.4	12.1	11.4	7.3	43.0	44.2	6.0	6.9	50.0	55.8
337	E1(m)	2 BED TOWNHOUSE	4	Yes	80.0	80.0	30.0	33.7	14.5	11.4	/	/	25.0	25.9	4.0	5.2	30.0	44.5
338	D1	3 BED TOWNHOUSE	4	Yes	92.0	92.0	30.0	32.2	13.0	10.0	7.1	/	28.0	30.1	4.0	4.4	40.0	199.7
339	D1(m)	3 BED TOWNHOUSE	4	Yes	92.0	92.0	30.0	32.2	13.0	10.0	7.1	/	28.0	30.1	4.0	4.4	40.0	188.4
340	E1(m)	2 BED TOWNHOUSE	4	Yes	80.0	80.0	30.0	33.7	14.5	11.4	/	/	25.0	25.9	4.0	5.2	30.0	44.5

Schedule of Accomodation and Housing Quality Assesment

UNIT NO.	UNIT TYPE	DESCRIPTION	BED SPACES	DUAL ASPECT	MIN. UNIT AREA (m^2)	UNIT AREA (m^2)	MIN. AGG. LIVING AREA (m^2)	AGG. LIVING AREA (m^2)	BED 1 (m^2)	BED 2 (m^2)	BED 3 (m^2)	BED 4 (m^2)	MIN. AGG. BED AREA (m^2)	AGG. BED AREA (m^2)	MIN. STORAGE (m^2)	STORAGE (m^2)	MIN. PRIVATE AMENITY SPACE (m^2)	PRIVATE AMENITY SPACE (m^2)
HOUSING																		
341	D1	3 BED TOWNHOUSE	4	Yes	92.0	92.0	30.0	32.2	13.0	10.0	7.1	/	28.0	30.1	4.0	4.4	40.0	62.5
342	D1(m)	3 BED TOWNHOUSE	4	Yes	92.0	92.0	30.0	32.2	13.0	10.0	7.1	/	28.0	30.1	4.0	4.4	40.0	62.5
343	E1(m)	2 BED TOWNHOUSE	4	Yes	80.0	80.0	30.0	33.7	14.5	11.4	/	/	25.0	25.9	4.0	5.2	30.0	44.5
344	D1	3 BED TOWNHOUSE	4	Yes	92.0	92.0	30.0	32.2	13.0	10.0	7.1	/	28.0	30.1	4.0	4.4	40.0	62.5
345	D1(m)	3 BED TOWNHOUSE	4	Yes	92.0	92.0	30.0	32.2	13.0	10.0	7.1	/	28.0	30.1	4.0	4.4	40.0	62.5
346	E1(m)	2 BED TOWNHOUSE	4	Yes	80.0	80.0	30.0	33.7	14.5	11.4	/	/	25.0	25.9	4.0	5.2	30.0	44.5
347	E1(m)	2 BED TOWNHOUSE	4	Yes	80.0	80.0	30.0	33.7	14.5	11.4	/	/	25.0	25.9	4.0	5.2	30.0	44.5
348	D1	3 BED TOWNHOUSE	4	Yes	92.0	92.0	30.0	32.2	13.0	10.0	7.1	/	28.0	30.1	4.0	4.4	40.0	62.5
349	F2	3 BED SEMI-DETACHED	5	Yes	92.0	104.1	34.0	35.1	13.0	11.8	7.6	/	32.0	32.4	5.0	5.7	40.0	54.5
350	F3(m)	3 BED SEMI-DETACHED	5	Yes	92.0	109.7	34.0	34.1	13.5	13.0	7.6	/	32.0	34.1	5.0	5.6	40.0	70.0
351	D1	3 BED TOWNHOUSE	4	Yes	92.0	92.0	30.0	32.2	13.0	10.0	7.1	/	28.0	30.1	4.0	4.4	40.0	215.5
352	E1	2 BED TOWNHOUSE	4	Yes	80.0	80.0	30.0	33.7	14.5	11.4	/	/	25.0	25.9	4.0	5.2	30.0	82.4
353	D1(m)	3 BED TOWNHOUSE	4	Yes	92.0	92.0	30.0	32.2	13.0	10.0	7.1	/	28.0	30.1	4.0	4.4	40.0	108.4
354	D1	3 BED TOWNHOUSE	4	Yes	92.0	92.0	30.0	32.2	13.0	10.0	7.1	/	28.0	30.1	4.0	4.4	40.0	127.9
355	E1	2 BED TOWNHOUSE	4	Yes	80.0	80.0	30.0	33.7	14.5	11.4	/	/	25.0	25.9	4.0	5.2	30.0	86.0
356	D1(m)	3 BED TOWNHOUSE	4	Yes	92.0	92.0	30.0	32.2	13.0	10.0	7.1	/	28.0	30.1	4.0	4.4	40.0	113.6
357	D1	3 BED TOWNHOUSE	4	Yes	92.0	92.0	30.0	32.2	13.0	10.0	7.1	/	28.0	30.1	4.0	4.4	40.0	105.2
358	E1	2 BED TOWNHOUSE	4	Yes	80.0	80.0	30.0	33.7	14.5	11.4	/	/	25.0	25.9	4.0	5.2	30.0	70.0
359	F1(m)	3 BEDTOWNHOUSE	5	Yes	92.0	102.6	34.0	34.6	13.4	12.1	7.3	/	32.0	32.8	5.0	5.4	40.0	82.0
360	D1(m)	3 BED TOWNHOUSE	4	Yes	92.0	92.0	30.0	32.2	13.0	10.0	7.1	/	28.0	30.1	4.0	4.4	40.0	87.4
361	E1(m)	2 BED TOWNHOUSE	4	Yes	80.0	80.0	30.0	33.7	14.5	11.4	/	/	25.0	25.9	4.0	5.2	30.0	44.5
362	E1(m)	2 BED TOWNHOUSE	4	Yes	80.0	80.0	30.0	33.7	14.5	11.4	/	/	25.0	25.9	4.0	5.2	30.0	44.5
363	D1	3 BED TOWNHOUSE	4	Yes	92.0	92.0	30.0	32.2	13.0	10.0	7.1	/	28.0	30.1	4.0	4.4	40.0	62.5
364	D1(m)	3 BED TOWNHOUSE	4	Yes	92.0	92.0	30.0	32.2	13.0	10.0	7.1	/	28.0	30.1	4.0	4.4	40.0	62.5
365	E1(m)	2 BED TOWNHOUSE	4	Yes	80.0	80.0	30.0	33.7	14.5	11.4	/	/	25.0	25.9	4.0	5.2	30.0	44.5
366	E1(m)	2 BED TOWNHOUSE	4	Yes	80.0	80.0	30.0	33.7	14.5	11.4	/	/	25.0	25.9	4.0	5.2	30.0	44.5
367	F1	3 BEDTOWNHOUSE	5	Yes	92.0	102.6	34.0	34.6	13.4	12.1	7.3	/	32.0	32.8	5.0	5.4	40.0	39.4
398	F2(m)	3 BED SEMI-DETACHED	5	Yes	92.0	104.1	34.0	35.1	13.0	11.8	7.6	/	32.0	32.4	5.0	5.7	40.0	49.5
399	F2	3 BED SEMI-DETACHED	5	Yes	92.0	104.1	34.0	35.1	13.0	11.8	7.6	/	32.0	32.4	5.0	5.7	40.0	49.5
400	F3(m)	3 BED SEMI-DETACHED	5	Yes	92.0	109.7	34.0	34.1	13.5	13.0	7.6	/	32.0	34.1	5.0	5.6	40.0	49.5
401	F3	3 BED SEMI-DETACHED	5	Yes	92.0	109.7	34.0	34.1	13.5	13.0	7.6	/	32.0	34.1	5.0	5.6	40.0	49.5

5.0 Housing Quality Assessment - Apartments

Extract from Sustainable Urban Housing: Design Standards for New Apartments. Guidelines for Planning Authorities (2023)

For the apartments, this Housing Quality Assessment provides a framework which quantifies each of the criteria required by the "*Sustainable Urban Housing: Design Standards for New Apartments. Guidelines for Planning Authorities (2023)* " and *"Planning Design Standards for Apartments. Guidelines for Planning Authorities (2025)"*.

Qualitative aspects such as the residential conceptual design approach are covered within the accompanying "Architectural Design Statement".

Please refer to ModelWorks' daylight/sunlight report for detailed information on daylight/sunlight ratios.

Please see schedule on the following pages showing the apartment typologies proposed within the development against the relative legislation. **While we are highlighting the minimum guides from *"Sustainable Urban Housing: Design Standards for New Apartments. Guidelines for Planning Authorities (2023)"*, we have also ensured that our apartments exceed the minimum standards set out in *"Planning Design Standards for Apartments. Guidelines for Planning Authorities (2025)"***

All apartments are dual or triple-aspect, which aligns with ***paragraph 3.17 of the Design Standards for New Apartments (2023).***



Minimum overall apartment floor areas

Studio	37 sq m (n/a)*
One bedroom	*45 sq m (38 sq m)**
Two bedrooms (3 person)**	*63 sq m (n/a)**
Two bedrooms (4 person)	*73 sq m (55 sq m)**
Three bedrooms	*90 sq m (70 sq m)**

Minimum aggregate floor areas for living/dining/kitchen rooms, and minimum widths for the main living/dining rooms

Apartment type***	Width of living/dining room	Aggregate floor area of living / dining / kitchen area*
Studio	4m**	30 sq m**
One bedroom	3.3 m	23 sq m
Two bedrooms (3 person)	3.6m	28 sq m
Two bedrooms (4 person)	3.6 m	30 sq m
Three bedrooms	3.8 m	34 sq m

Minimum bedroom floor areas/widths***

Type	Minimum width	Minimum floor area
Studio	4m**	30 sq m**
Single bedroom	2.1 m	7.1 sq m
Double bedroom	2.8 m	11.4 sq m
Twin bedroom	2.8 m	13 sq m

Minimum aggregate bedroom floor areas

One bedroom	11.4 sq m
Two bedrooms (3 person)	13 + 7.1 sq m = 20.1 sq m
Two bedrooms (4 person)	11.4 + 13 sq m = 24.4 sq m
Three bedrooms	11.4 + 13 + 7.1 sq m = 31.5 sq m

Minimum storage space requirements

Studio	3 sq m
One bedroom	3 sq m
Two bedrooms (3 person)	5 sq m
Two bedrooms (4 person)	6 sq m
Three or more bedrooms	9 sq m

Minimum floor areas for private amenity space

Studio	4 sq m
One bedroom	5 sq m
Two bedrooms (3 person)	6 sq m
Two bedrooms (4 person)	7 sq m
Three bedrooms	9 sq m

Schedule of Accomodation and Housing Quality Assesment

UNIT NO.	UNIT TYPE	DESCRIPTION	BED SPACES	DUAL ASPECT	MIN. UNIT AREA (m^2)	UNIT AREA (m^2)	MIN. AGG. LIVING AREA (m^2)	AGG. LIVING AREA (m^2)	BED 1 (m^2)	BED 2 (m^2)	BED 3 (m^2)	BED 4 (m^2)	MIN. AGG. BED AREA (m^2)	AGG. BED AREA (m^2)	MIN. STORAGE (m^2)	STORAGE (m^2)	MIN. PRIVATE AMENITY SPACE (m^2)	PRIVATE AMENITY SPACE (m^2)
APARTMENTS																		
94	R4	3 BED DUPLEX	5	Yes	90.0	107.2	34.0	34.0	13.0	11.4	7.1	/	31.5	31.5	9.0	9.1	9.0	21.2
95	S4	1 BED APARTMENT	2	Yes	45.0	51.7	23.0	24.3	13.0	/	/	/	11.4	13.0	3.0	4.1	5.0	9.0
96	R1	3 BED DUPLEX	5	Yes	90.0	107.2	34.0	34.0	13.0	11.4	7.1	/	31.5	31.5	9.0	9.1	9.0	19.9
97	S1	1 BED APARTMENT	2	Yes	45.0	51.7	23.0	24.3	13.0	/	/	/	11.4	13.0	3.0	4.1	5.0	8.6
98	R1	3 BED DUPLEX	5	Yes	90.0	107.2	34.0	34.0	13.0	11.4	7.1	/	31.5	31.5	9.0	9.1	9.0	19.9
99	S1	1 BED APARTMENT	2	Yes	45.0	51.7	23.0	24.3	13.0	/	/	/	11.4	13.0	3.0	4.1	5.0	8.6
100	R1	3 BED DUPLEX	5	Yes	90.0	107.2	34.0	34.0	13.0	11.4	7.1	/	31.5	31.5	9.0	9.1	9.0	19.9
101	S1	1 BED APARTMENT	2	Yes	45.0	51.7	23.0	24.3	13.0	/	/	/	11.4	13.0	3.0	4.1	5.0	8.6
102	R3	3 BED DUPLEX	5	Yes	90.0	107.2	34.0	34.0	13.0	11.4	7.1	/	31.5	31.5	9.0	9.1	9.0	20.6
103	S3	1 BED APARTMENT	2	Yes	45.0	51.7	23.0	24.3	13.0	/	/	/	11.4	13.0	3.0	4.1	5.0	9.0
104	R2	3 BED DUPLEX	5	Yes	90.0	107.2	34.0	34.0	13.0	11.4	7.1	/	31.5	31.5	9.0	9.1	9.0	21.2
105	S2	1 BED APARTMENT	2	Yes	45.0	51.7	23.0	24.3	13.0	/	/	/	11.4	13.0	3.0	4.1	5.0	9.0
106	R1	3 BED DUPLEX	5	Yes	90.0	107.2	34.0	34.0	13.0	11.4	7.1	/	31.5	31.5	9.0	9.1	9.0	19.9
107	S1	1 BED APARTMENT	2	Yes	45.0	51.7	23.0	24.3	13.0	/	/	/	11.4	13.0	3.0	4.1	5.0	8.6
108	R1	3 BED DUPLEX	5	Yes	90.0	107.2	34.0	34.0	13.0	11.4	7.1	/	31.5	31.5	9.0	9.1	9.0	19.9
109	S1	1 BED APARTMENT	2	Yes	45.0	51.7	23.0	24.3	13.0	/	/	/	11.4	13.0	3.0	4.1	5.0	8.6
110	R1	3 BED DUPLEX	5	Yes	90.0	107.2	34.0	34.0	13.0	11.4	7.1	/	31.5	31.5	9.0	9.1	9.0	19.9
111	S1	1 BED APARTMENT	2	Yes	45.0	51.7	23.0	24.3	13.0	/	/	/	11.4	13.0	3.0	4.1	5.0	8.6
112	R1	3 BED DUPLEX	5	Yes	90.0	107.2	34.0	34.0	13.0	11.4	7.1	/	31.5	31.5	9.0	9.1	9.0	19.9
113	S1	1 BED APARTMENT	2	Yes	45.0	51.7	23.0	24.3	13.0	/	/	/	11.4	13.0	3.0	4.1	5.0	8.6
114	R5	3 BED DUPLEX	5	Yes	90.0	107.2	34.0	34.0	13.0	11.4	7.1	/	31.5	31.5	9.0	9.1	9.0	20.6
115	S5	1 BED APARTMENT	2	Yes	45.0	51.7	23.0	24.3	13.0	/	/	/	11.4	13.0	3.0	4.1	5.0	9.0
368	P2	1 BED MAISONETTE	2	Yes	45.0	56.5	23.0	24.7	13.0	/	/	/	11.4	13.0	3.0	3.8	5.0	53.0
369	P1	1 BED MAISONETTE	2	Yes	45.0	56.6	23.0	23.3	13.0	/	/	/	11.4	13.0	3.0	3.4	5.0	27.1
370	P1(m)	1 BED MAISONETTE	2	Yes	45.0	56.6	23.0	23.3	13.0	/	/	/	11.4	13.0	3.0	3.4	5.0	27.1
371	P2(m)	1 BED MAISONETTE	2	Yes	45.0	56.5	23.0	24.7	13.0	/	/	/	11.4	13.0	3.0	3.8	5.0	38.2
372	P2	1 BED MAISONETTE	2	Yes	45.0	56.5	23.0	24.7	13.0	/	/	/	11.4	13.0	3.0	3.8	5.0	38.2
373	P1	1 BED MAISONETTE	2	Yes	45.0	56.6	23.0	23.3	13.0	/	/	/	11.4	13.0	3.0	3.4	5.0	27.1
374	P1(m)	1 BED MAISONETTE	2	Yes	45.0	56.6	23.0	23.3	13.0	/	/	/	11.4	13.0	3.0	3.4	5.0	27.1
375	P2(m)	1 BED MAISONETTE	2	Yes	45.0	56.5	23.0	24.7	13.0	/	/	/	11.0	13.0	3.0	3.8	5.0	31.3

Schedule of Accomodation and Housing Quality Assesment

UNIT NO.	UNIT TYPE	DESCRIPTION	BED SPACES	DUAL ASPECT	MIN. UNIT AREA (m^2)	UNIT AREA (m^2)	MIN. AGG. LIVING AREA (m^2)	AGG. LIVING AREA (m^2)	BED 1 (m^2)	BED 2 (m^2)	BED 3 (m^2)	BED 4 (m^2)	MIN. AGG. BED AREA (m^2)	AGG. BED AREA (m^2)	MIN. STORAGE (m^2)	STORAGE (m^2)	MIN. PRIVATE AMENITY SPACE (m^2)	PRIVATE AMENITY SPACE (m^2)
376	R3	3 BED DUPLEX	5	Yes	90.0	107.2	34.0	34.0	13.0	11.4	7.1	/	31.5	31.5	9.0	9.1	9.0	21.2
377	S3	1 BED APARTMENT	2	Yes	45.0	51.7	23.0	24.3	13.0	/	/	/	11.4	13.0	3.0	4.1	5.0	9.0
378	R1	3 BED DUPLEX	5	Yes	90.0	107.2	34.0	34.0	13.0	11.4	7.1	/	31.5	31.5	9.0	9.1	9.0	19.9
379	S1	1 BED APARTMENT	2	Yes	45.0	51.7	23.0	24.3	13.0	/	/	/	11.4	13.0	3.0	4.1	5.0	8.6
380	R1	3 BED DUPLEX	5	Yes	90.0	107.2	34.0	34.0	13.0	11.4	7.1	/	31.5	31.5	9.0	9.1	9.0	19.9
381	S1	1 BED APARTMENT	2	Yes	45.0	51.7	23.0	24.3	13.0	/	/	/	11.4	13.0	3.0	4.1	5.0	8.6
382	R1	3 BED DUPLEX	5	Yes	90.0	107.2	34.0	34.0	13.0	11.4	7.1	/	31.5	31.5	9.0	9.1	9.0	19.9
383	S1	1 BED APARTMENT	2	Yes	45.0	51.7	23.0	24.3	13.0	/	/	/	11.4	13.0	3.0	4.1	5.0	8.6
384	R1	3 BED DUPLEX	5	Yes	90.0	107.2	34.0	34.0	13.0	11.4	7.1	/	31.5	31.5	9.0	9.1	9.0	20.6
385	S1	1 BED APARTMENT	2	Yes	45.0	51.7	23.0	24.3	13.0	/	/	/	11.4	13.0	3.0	4.1	5.0	9.0
386	R2	3 BED DUPLEX	5	Yes	90.0	107.2	34.0	34.0	13.0	11.4	7.1	/	31.5	31.5	9.0	9.1	9.0	21.2
387	S2	1 BED APARTMENT	2	Yes	45.0	51.7	23.0	24.3	13.0	/	/	/	11.4	13.0	3.0	4.1	5.0	9.0
388	R3	3 BED DUPLEX	5	Yes	90.0	107.2	34.0	34.0	13.0	11.4	7.1	/	31.5	31.5	9.0	9.1	9.0	19.9
389	S3	1 BED APARTMENT	2	Yes	45.0	51.7	23.0	24.3	13.0	/	/	/	11.4	13.0	3.0	4.1	5.0	8.6
390	R1	3 BED DUPLEX	5	Yes	90.0	107.2	34.0	34.0	13.0	11.4	7.1	/	31.5	31.5	9.0	9.1	9.0	19.9
391	S1	1 BED APARTMENT	2	Yes	45.0	51.7	23.0	24.3	13.0	/	/	/	11.4	13.0	3.0	4.1	5.0	8.6
392	R1	3 BED DUPLEX	5	Yes	90.0	107.2	34.0	34.0	13.0	11.4	7.1	/	31.5	31.5	9.0	9.1	9.0	19.9
393	S1	1 BED APARTMENT	2	Yes	45.0	51.7	23.0	24.3	13.0	/	/	/	11.4	13.0	3.0	4.1	5.0	8.6
394	R1	3 BED DUPLEX	5	Yes	90.0	107.2	34.0	34.0	13.0	11.4	7.1	/	31.5	31.5	9.0	9.1	9.0	19.9
395	S1	1 BED APARTMENT	2	Yes	45.0	51.7	23.0	24.3	13.0	/	/	/	11.4	13.0	3.0	4.1	5.0	8.6
396	R4	3 BED DUPLEX	5	Yes	90.0	107.2	34.0	34.0	13.0	11.4	7.1	/	31.5	31.5	9.0	9.1	9.0	20.6
397	S4	1 BED APARTMENT	2	Yes	45.0	51.7	23.0	24.3	13.0	/	/	/	11.4	13.0	3.0	4.1	5.0	9.0
402	R5	3 BED DUPLEX	5	Yes	90.0	107.2	34.0	34.0	13.0	11.4	7.1	/	31.5	31.5	9.0	9.1	9.0	20.6
403	S5	1 BED APARTMENT	2	Yes	45.0	51.7	23.0	24.3	13.0	/	/	/	11.4	13.0	3.0	4.1	5.0	9.0
404	R1	3 BED DUPLEX	5	Yes	90.0	107.2	34.0	34.0	13.0	11.4	7.1	/	31.5	31.5	9.0	9.1	9.0	14.3
405	S1	1 BED APARTMENT	2	Yes	45.0	51.7	23.0	24.3	13.0	/	/	/	11.4	13.0	3.0	4.1	5.0	8.6
406	R1	3 BED DUPLEX	5	Yes	90.0	107.2	34.0	34.0	13.0	11.4	7.1	/	31.5	31.5	9.0	9.1	9.0	19.9
407	S1	1 BED APARTMENT	2	Yes	45.0	51.7	23.0	24.3	13.0	/	/	/	11.4	13.0	3.0	4.1	5.0	8.6
408	R1	3 BED DUPLEX	5	Yes	90.0	107.2	34.0	34.0	13.0	11.4	7.1	/	31.5	31.5	9.0	9.1	9.0	19.9
409	S1	1 BED APARTMENT	2	Yes	45.0	51.7	23.0	24.3	13.0	/	/	/	11.4	13.0	3.0	4.1	5.0	8.6
410	R1	3 BED DUPLEX	5	Yes	90.0	107.2	34.0	34.0	13.0	11.4	7.1	/	31.5	31.5	9.0	9.1	9.0	19.9
411	S1	1 BED APARTMENT	2	Yes	45.0	51.7	23.0	24.3	13.0	/	/	/	11.4	13.0	3.0	4.1	5.0	8.6
412	R2	3 BED DUPLEX	5	Yes	90.0	107.2	34.0	34.0	13.0	11.4	7.1	/	31.5	31.5	9.0	9.1	9.0	21.2
413	S2	1 BED APARTMENT	2	Yes	45.0	51.7	23.0	24.3	13.0	/	/	/	11.4	13.0	3.0	4.1	5.0	9.0

6.0 Bicycle Spaces

CYCLE PARKING

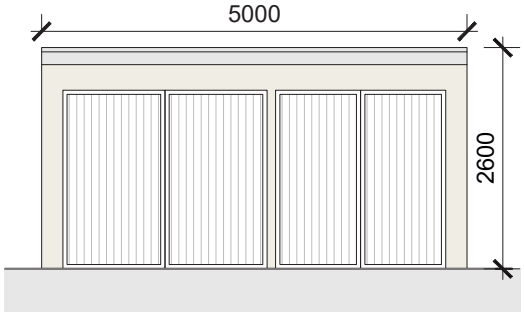

FRONT ELEVATION

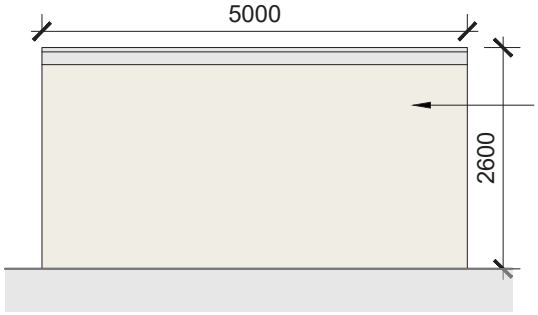

REAR ELEVATION

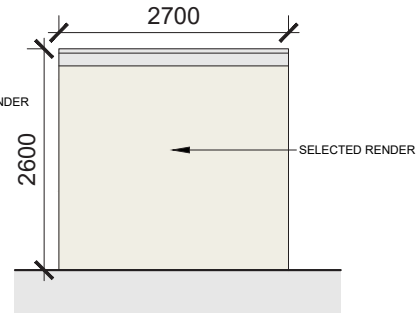

SIDE ELEVATION

Key Plan



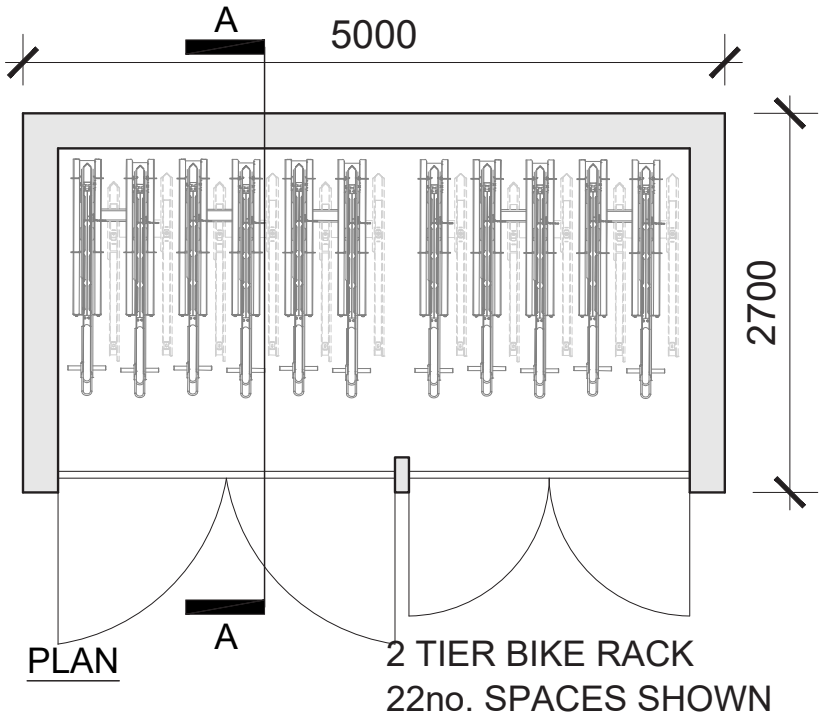

PLAN

2 TIER BIKE RACK
22no. SPACES SHOWN



2 TIER SYSTEM IMAGE

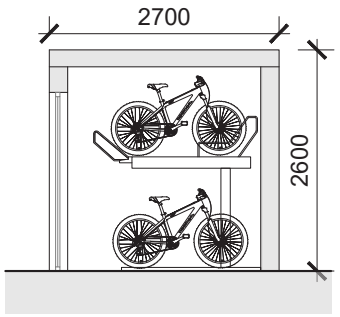

SECTION A-A

BIKE PARKING SCHEDULE
2 Bed Mid Townhouse & 2no. 3 Bed Semi-Detached Units
(1 space per bedroom) - 274*no. Bike spaces required*
**Detached, Semi-detached, End Townhouse & Maisonette Units have direct access to allocated GF private amenity space and can utilise this for bike storage.*
T1 136 X 3no. spaces (Secure)
Total provided = 408no. spaces
***Meets standards set out in the 'Sustainable and Compact Settlements' Guidelines 2024*
3 Bed Duplexes & 1 Bed Apartments
(1 space per bedroom + 0.5 space per unit)
-140no. bike spaces required
T2 112no. spaces provided (Secure)
T3 42no. spaces provided (Visitors - Sheffield stands)
Total provided = 154no. spaces
***Meets standards set out in the 'Sustainable and Compact Settlements' Guidelines 2024*
102no Child Creche
T4 12no. spaces provided (Secure - within the apt footprint)
T5 12no. spaces provided (Visitors - Sheffield stand)
Total provided = 24no. Spaces
TOTAL BIKE PARKING PROVIDED = 586no. spaces

Secure bike store type T2 shown above. For information on bike stores T1/T3/T4/T5, please refer to Drawing No's 24058/P/014A, 24058/P/014C & 24058/P/014D

7.0 Waste Management

The use of refuse bin stores will be minimised where possible.

Houses/maisonettes that have direct access to their private amenity space will be able to utilise this area for refuse bin storage. The mid-terrace townhouses and houses without direct access to their gardens will have a small private bin storage area near their entrance door. The own-door access apartments will have access to communal bin stores located within the public realm.

Bin stores will be built from durable materials and located in appropriate areas of the development. The dimensions of bin storage areas for the houses have been designed to satisfy the three-bin system.



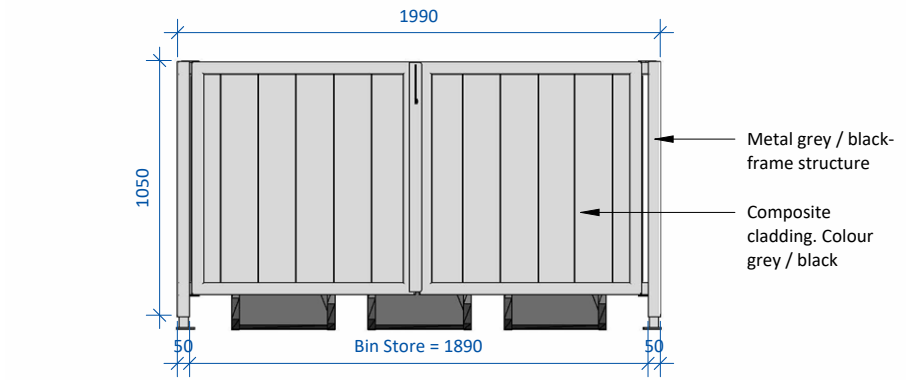

Front Elevation

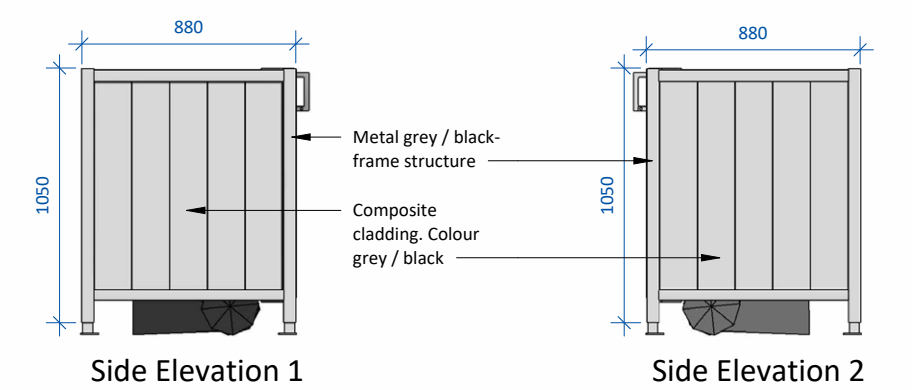

Side Elevation 1

Side Elevation 2

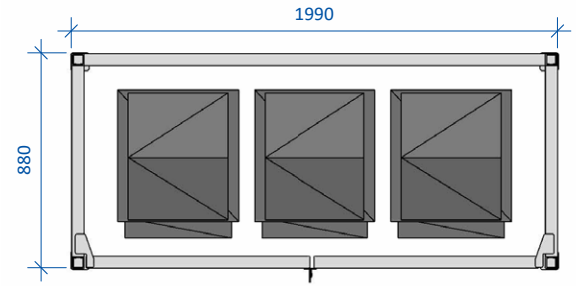

Roof Plan