03 PROPOSED DESIGN
ADAPTABILITY/ADAPTABLE UNITS

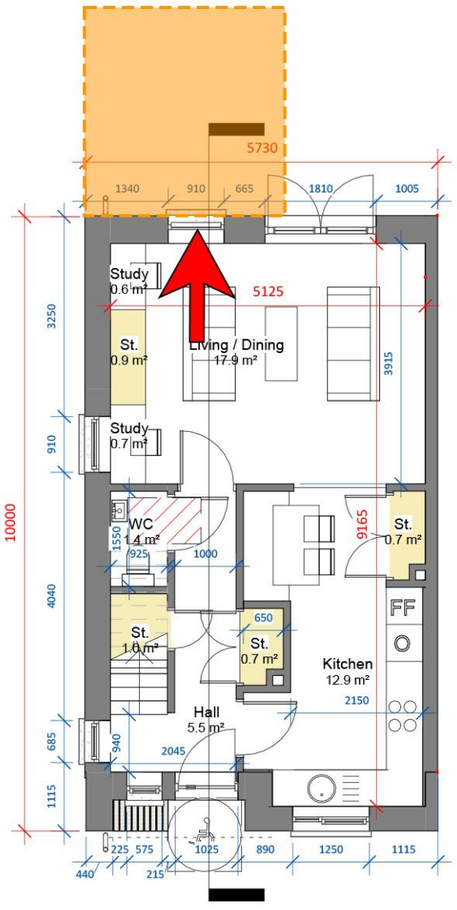

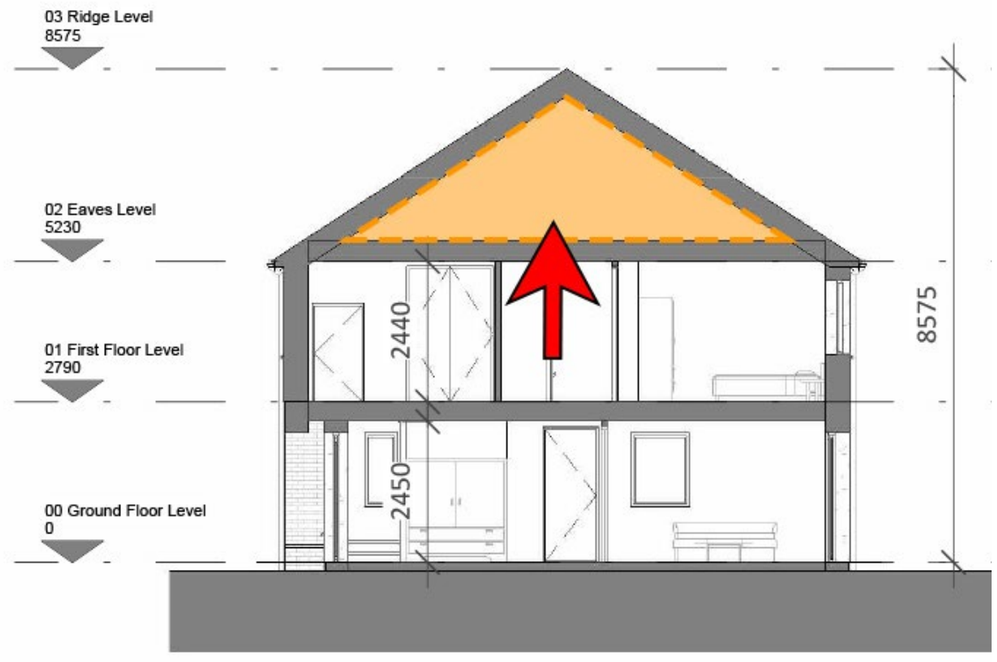

FIG: PROPOSED ADAPTABILITY OPTIONS

The proposed dwellings are adaptable to respond to potential changing needs over their lifetime. The units are strategically designed which allows the owner to extend into the attic and/or to the rear if they wish.

With a selection and distribution of house types reflecting how future market challenges can be used to the advantage of the community, the enhanced distinctiveness of the character areas will work for the benefit of this scheme.

In accordance with the Wexford County Development Plan, 20% of proposed units (86no units highlighted in **orange** on the below site plan) have been designed as lifetime homes that are suitable to accommodate/are adaptable to accommodate people with disabilities and older people



03 PROPOSED DESIGN
UNIVERSAL DESIGN ACCOMMODATION

Providing exceptional New Homes in a sustainable and commercially viable manner, in well-connected locations is the ultimate goal of this development. The own door access simplex/duplex apartment units and the maisonettes have been specifically developed with the principles from the Universal Design Guidelines implemented.

Ample space within bedrooms/bathrooms and living areas ensures that the usability of these spaces is at the forefront of the design, with areas for turning within corridors/hallways also considered to ensure ease of movement for residents within dwellings.

The Design Criteria in which these units have been developed has been taken from the **'2023 Design Standards for New Apartments'** and our design approach focuses on implementing the key principles within the **'Universal Design Guidelines for Homes in Ireland'** document.

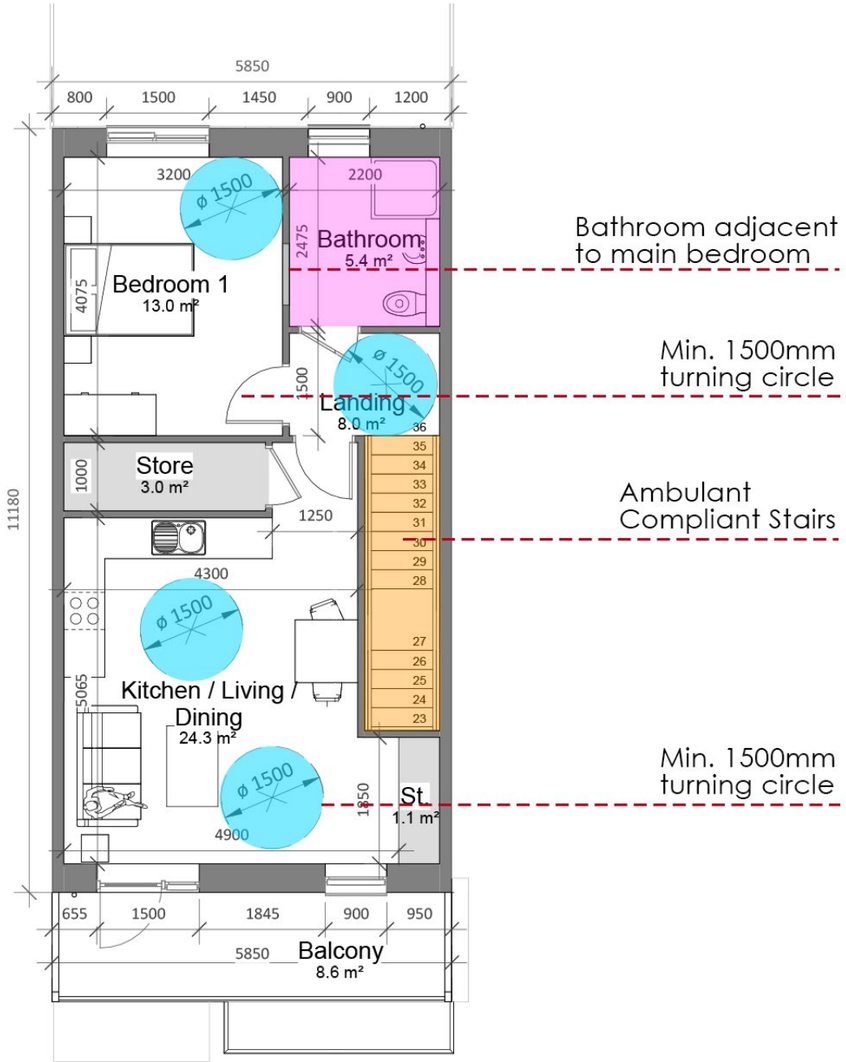



FIG: UNIVERSAL DESIGN ELEMENTS IN SIMPLEX TYPE S1

03 PROPOSED DESIGN
UNIVERSAL DESIGN ACCOMMODATION

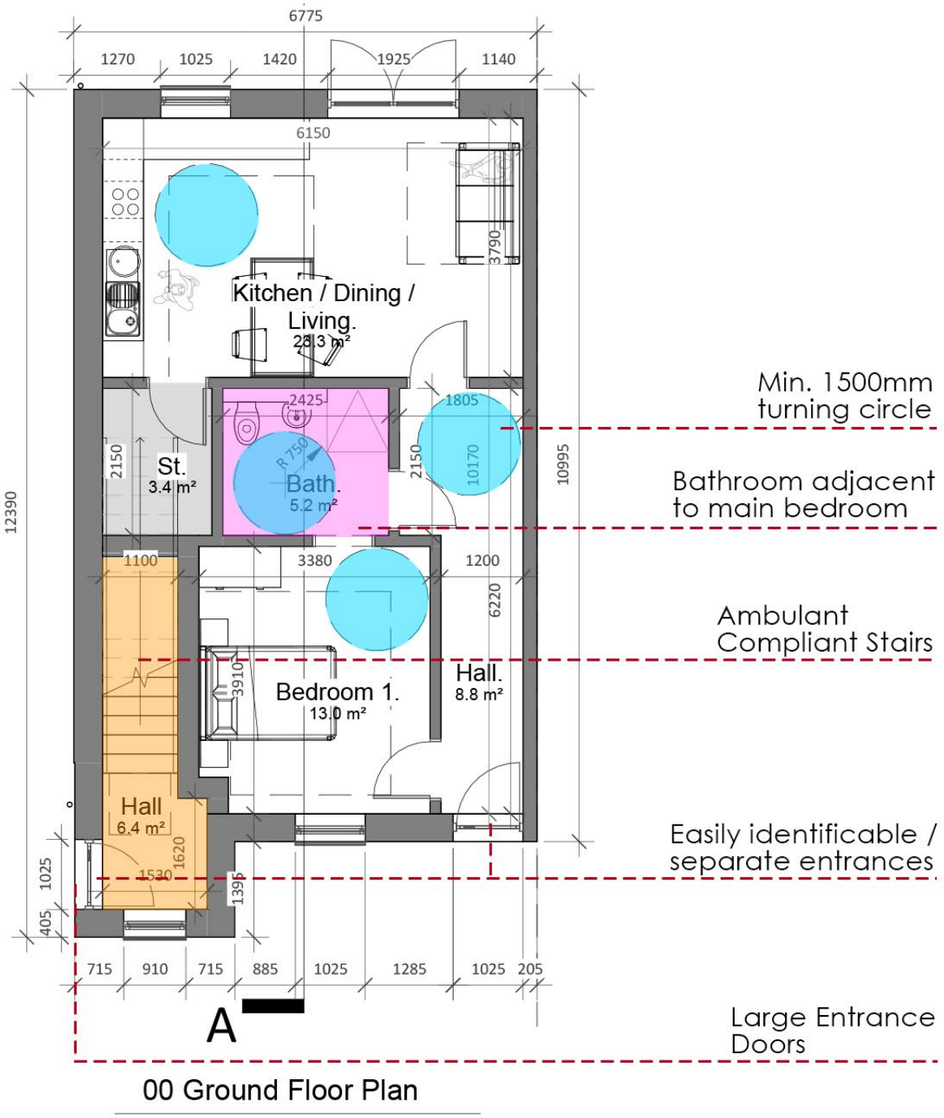

00 Ground Floor Plan

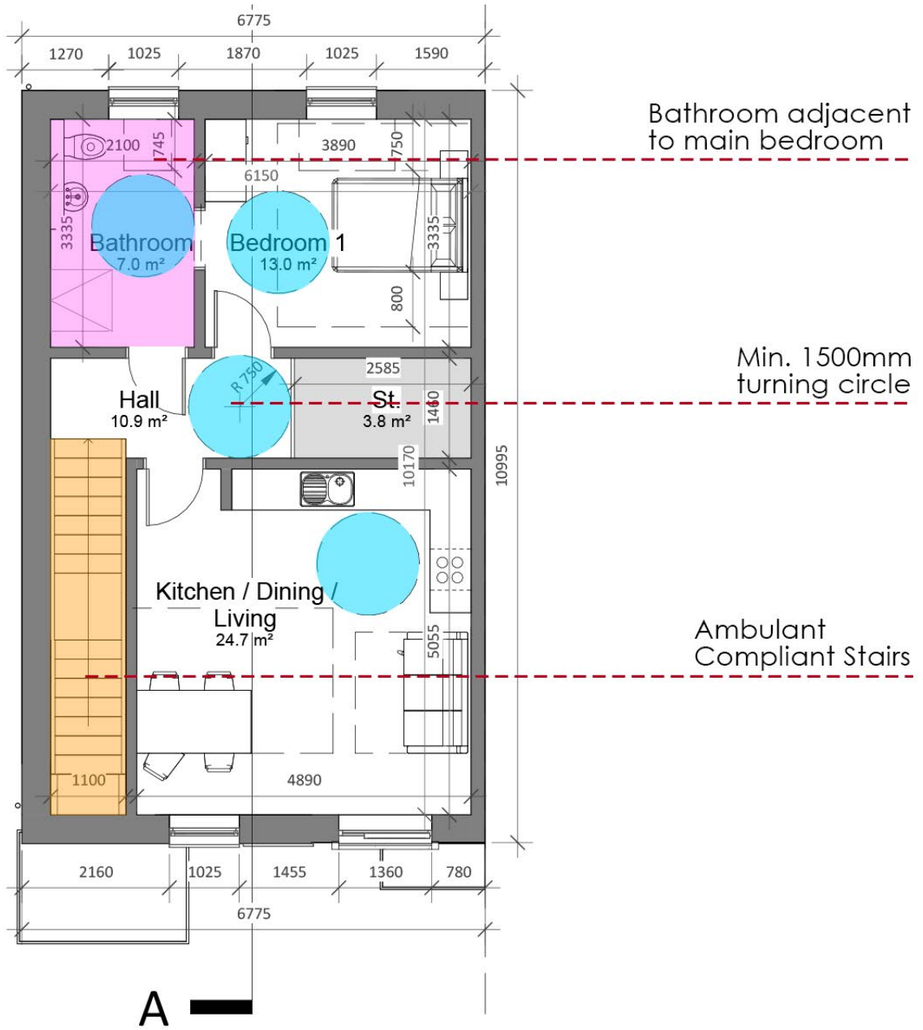

01 First Floor Level

FIG: UNIVERSAL DESIGN ELEMENTS IN MAISONETTE TYPES P1 AND P2

03 PROPOSED DESIGN
UNIVERSAL DESIGN ACCOMMODATION

As mentioned previously, in accordance with the Wexford County Development Plan, 20% of proposed units have been designed as lifetime homes that are suitable to accommodate/are adaptable to accommodate people with disabilities and older people. Along with the Maisonettes and Own Door Access Simplex/Duplex Apartment units which have been developed with the design criteria set out in the 'Universal Design Guidelines for Homes in Ireland' document, the Type B1 semi-detached and Type F1 townhouses have been designed with an adaptable layout which follows the Universal Design Guidelines.

These Type B1 and F1 units have been designed to be easily converted to a unit which follows the guidelines set out in the 'Universal Design Guidelines for Homes in Ireland' document by making some minor changes to the original layout. These adaptable units, along with the maisonette and simplex/duplex units, help to create a welcoming and accessible scheme for all end users. With the accessible maisonettes/apartments and the adaptable semi-detached / townhouse units, over 20% of the scheme has been designed with disabled and older people residents in mind.

Legend

- Hall / Landing
- Living room
- Kitchen
- Downstairs WC
- Bathroom / Ensuite
- Storage
- Bedroom
- Weather protection at entrance
- 1500x1500mm adjacent to entrance door
- 1500mm turning circle
- Space for a wheelchair within WC
- Space for a possible level access shower
- 1800x1500 space for desk, chair & filing
- 1200mm space on at least two sides of dining table
- Stacked space with 'soft spot' for the provision of a future home lift
- Location for a temporary bed space on the entrance level
- 800mm clear space around double bed
- 'Soft spot' between bedroom and bathroom for future doorway
- 800mm clear space adjacent to single bed
- 300mm leading edge on all doors minimum clear width noted
- External Light

Type F1
End of terrace
2 storey / 3 bed / 5 person unit

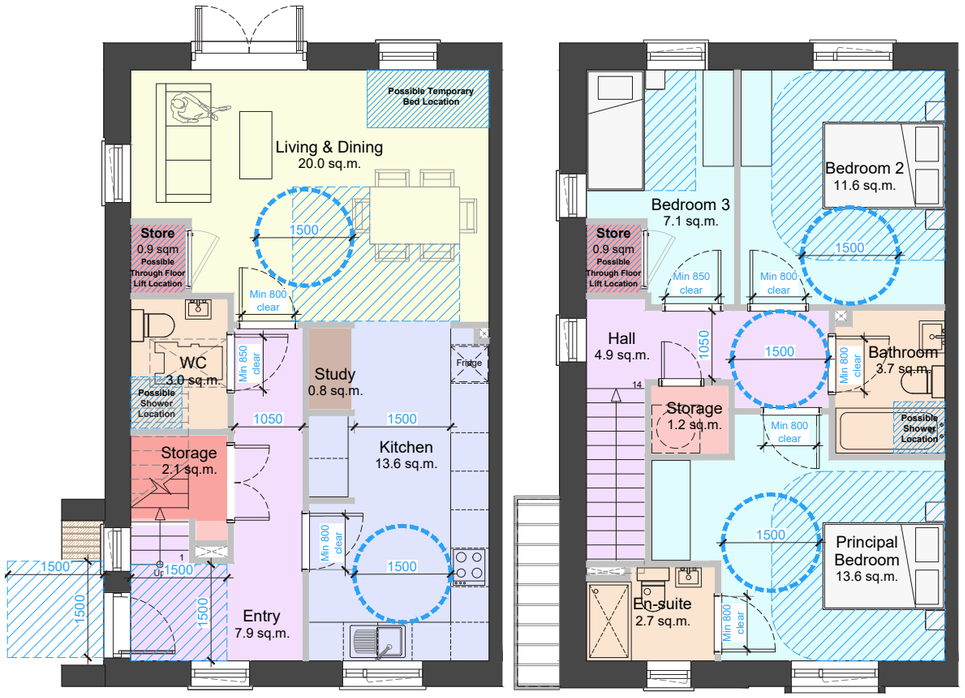

Type B1
Semi-detached
3 storey / 4 bed / 7 person unit

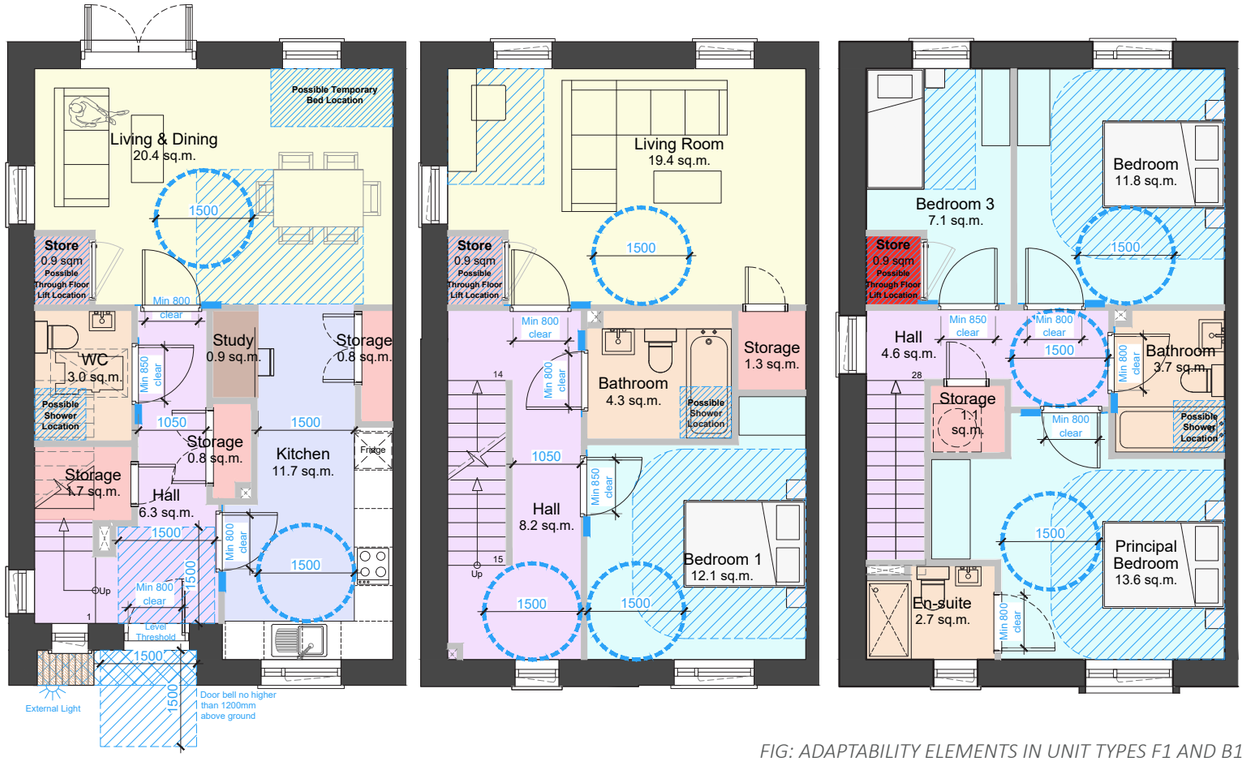

FIG: ADAPTABILITY ELEMENTS IN UNIT TYPES F1 AND B1

03 PROPOSED DESIGN
PART V PROPOSAL

Part V Proposal - units highlighted in **magenta**

A total of 82no. Part V units have been included within the proposed development and these have been pepper-potted in small clusters around the site to ensure that an integrated approach is achieved. This equates to 20% of the 413no. residential units within the development.

The 82no. units consist of:

No. 12 - 3 bed townhouses
92.0 sq.m.

No. 42 - 2 bed townhouse
80.0 sq.m.

No. 10 - 3 bed duplex
107.2 sq.m.

No. 10 - 1 bed apartment
51.7 sq.m.

No. 08 - 1 bed maisonettes
56.5-56.6 sq.m.



UNIT TYPES P1 & P2 - CA01



UNIT TYPE D1 - CA02



UNIT TYPE E1 - CA02



UNIT TYPE R1/3 & S1/3 - CA03

PART V UNIT TYPE EXAMPLES

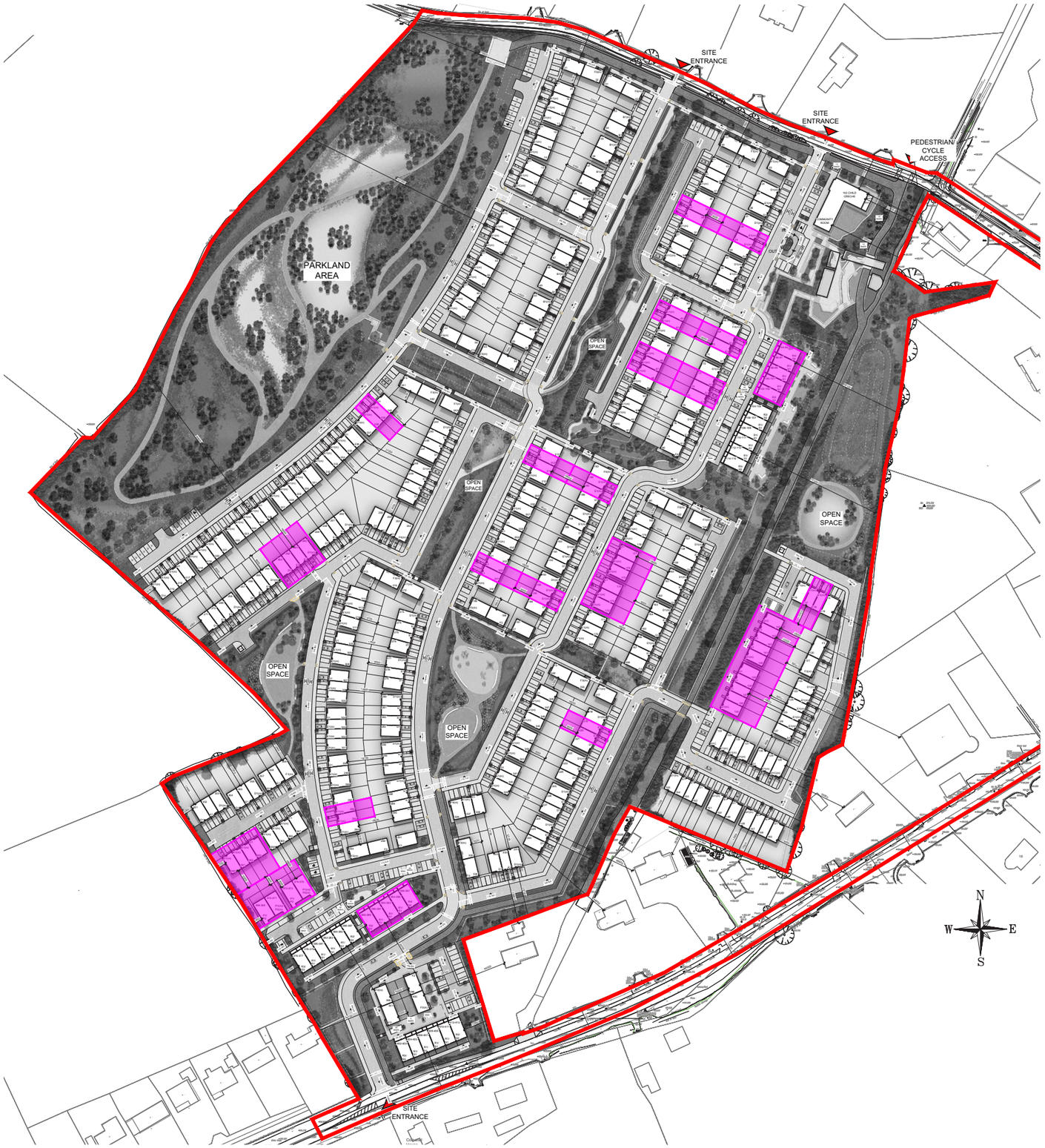

03 PROPOSED DESIGN
PROPOSED CRÈCHE & COMMUNITY SPACE



Appendix 2 of the 'Childcare Guidelines for Planning Authorities' establishes an indicative standard of one childcare facility per 75 dwellings in new housing areas (Paragraphs 2.4 and 3.3.1 refer). One facility providing a minimum of 20 childcare places is considered to be a reasonable starting point in this regard. The Guidance acknowledges that other case-specific assumptions may lead to an increase or decrease in this requirement. The proposed development will result in the provision of 413 no. residential units. The proposed development makes provision for a 102-child crèche of 509.9 m² (576.9 m² gross area). This facility is located in the north-east corner of the site, in close proximity to one of the site entrances and across from Gaelscoil Moshiolog, and accommodates parking for both staff and visitors along with a dedicated drop-off and turning area. A play area is also proposed to the rear of the crèche.

Based on the 'Childcare Guidelines' method for establishing creche spaces, the proposed development of 413no units would require a 100no child crèche. These childcare spaces are based on the exclusion of one beds from the calculation. This provision has regard to the size and mixed tenure of the development as well as the need to safeguard the viability of the identified established service offer locally. The design and the location of the crèche has been carefully considered in relation to how it fits within the proposed development in order to create a feature building that is in close proximity to the entrance.

03 PROPOSED DESIGN
SHARED CYCLE AND PEDESTRIAN FOOTPATHS

A shared cycle and pedestrian pathway has been incorporated into the scheme in order to provide strong pedestrian/cycle links through the site and to connect the scheme to the surrounding areas. This pathway starts at the site entrance on the Carnew Road and runs through the scheme, past the crèche, connecting to the Kilnahue Lane. A series of secondary pedestrian paths run throughout the site connecting the open spaces to the shared pathway.



03 PROPOSED DESIGN
PARKING ALLOCATION

CAR PARKING

A variety of parking configurations helps us provide a strong sense of place and liveable, pedestrian priority streets, while reducing the impact of cars within the overall scheme. Each unit in the development has provision for car parking.

2 no. spaces are provided for the 3 and 4 bed housing units, and 1 no. space is provided for the 2 bed mid - townhouse units. 1 no. space has been provided for each of the apartment units with visitors spaces also provided.

12 no. parking spaces are provided for the crèche including 1 no. accessible space and 1 no. large drop off space (that can accommodate 2-3 cars). A dedicated turning area has also been included to ensure a safe/controlled area for vehicles to turn and exit the site is provided.

Please refer to the accompanying E.V. Charging Strategy Report for information on the E.V. charging proposal.

Legend
- Bin Store
- Bike Store
- Allocated Parking
- Creche Parking



Crèche Parking Arrangement

Standard Parking Arrangement Example



Standard Parking Arrangement Example



03 PROPOSED DESIGN
PARKING ALLOCATION

BICYCLE PARKING

The housing units with direct access to their private amenity space will utilise this to store their bicycles.

For the central townhouses/units without direct access to their gardens and apartment units, the bicycle parking facilities have been assigned as follows:

- No. 3 bike spaces per housing unit, which equates to 1 space per bedroom for the 2 bed central townhouses along with 1no additional space for visitor bike parking. The central townhouses and units without direct access to their gardens have their bike spaces located in covered bike stores located near to their entrances.
- No. 1 private bike space per bed for the apartments, along with 1 no. visitor bike space per 2 apartment units. The secure bike spaces are located within dedicated structures (Type T2 shown) and the visitors spaces in the form of Sheffield Stands

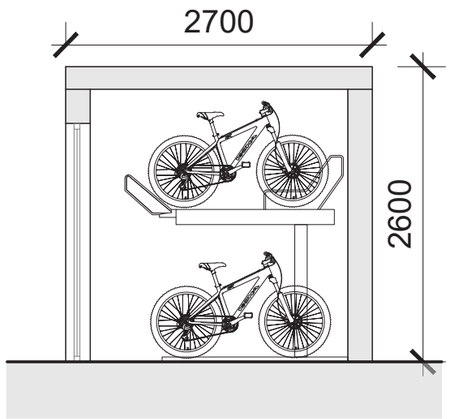

SECTION A-A

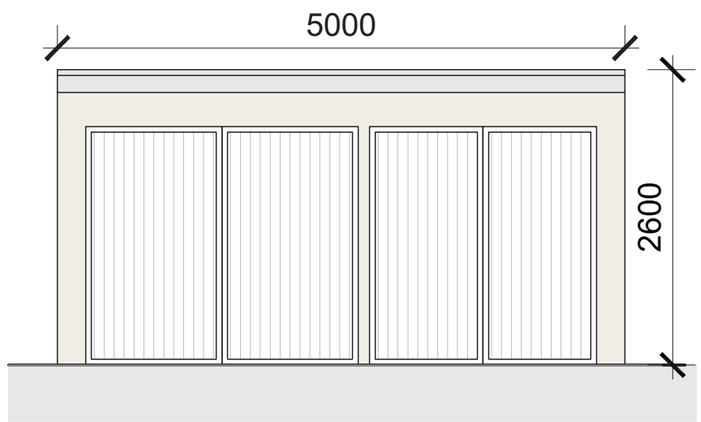

FRONT ELEVATION

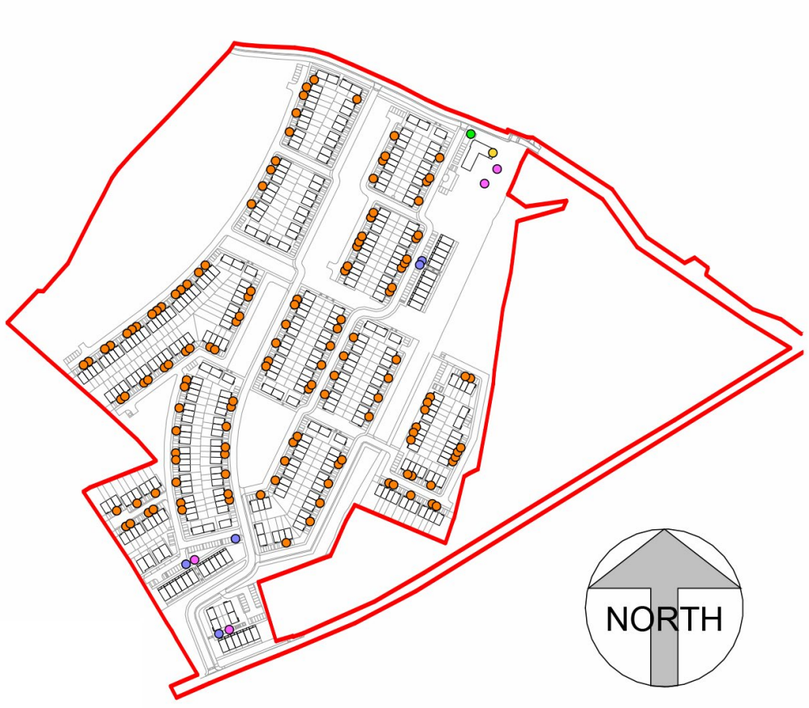

KEY PLAN HIGHLIGHTING ALL BIKE STORE TYPES



2 TIER SYSTEM IMAGE

Refer to Site Plan (Drawing no. 24058/P/005) for the orientation of individual bike stores

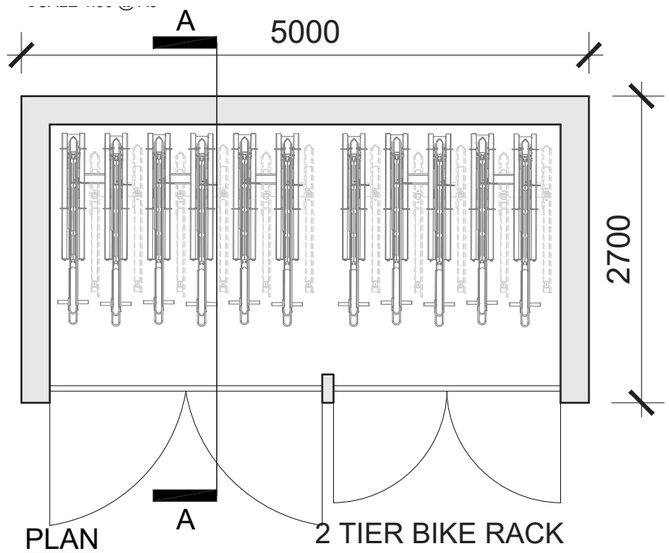

PLAN

2 TIER BIKE RACK
22no. SPACES SHOWN

03 PROPOSED DESIGN
CHARACTER AREAS

The site has been divided into 3 no. character areas in order to provide adequate variety within the scheme and to aid in placemaking. Each character area has been located around key landmarks within the scheme which provide unique features that give each area a distinctive quality. Each character forms a distinct neighbourhood characterised by specific landscape features and treatments.

Careful consideration has also been given to the materiality of the buildings to create an unmistakable identity for distinctive character areas and good quality open spaces encouraging social interaction. Density, scale, open space landscaping and building material choice all contribute to creating distinct character areas.

The variety in the mix of housing units had to reflect the densities envisaged, as well as market demand to ensure the economic viability of the scheme. Well-designed buildings are more likely to find the acceptance of local residents and planning authorities. Careful consideration is therefore given to an appropriate palette of materials that reflects the aesthetics and functionality of individual housing units.

The materiality of the development has been carefully considered to complement and enhance the urban architecture of the surrounding area. The materials and finishes selected have been chosen for their durability and to ensure the overall efficiency of the design.

The arrangement of materials in the elevational treatments have been designed to provide a distinct character to the proposal. These materials are low-maintenance and will create visually appealing, unique spaces for the end users.

S 7543:2015, ***Guide to Durability of Buildings and Building Elements***, Products and Components, has been referenced alongside current building regulations. This standard offers guidance on the durability, design life, and predicted service life of buildings and their components, helping to anticipate and reduce operational costs for both the management company and individual residents.



FIG: PROPOSED CHARACTER AREAS

03 PROPOSED DESIGN
CHARACTER AREA 1- KILNAHUE CRESCENT





M A T E R I A L P A L E T T E







FIG: PROPOSED CHARACTER AREA 1

CHARACTER AREA 1 has been named ***'Kilnahue Crescent'*** as a reference to the historic townland name in which the scheme is set as well as the creation of a crescent around a generous central open space. This character areas is located on the lower plateau, where the site is accessed from Carnew Road. This section creates a strong entrance feature to the scheme by providing split level 3 storey apartment and duplex units which also help to address the steeply sloped nature of this part of the site.

The units within this character area have been orientated to overlook the entrance street along with the various open spaces. The units feature a beige/buff brick and off-white render elevational treatment with a large amount of 3 storey apartment and duplex units and townhouses. Shared surfaces are also provided along the open spaces to enhance pedestrian permeability.

03 PROPOSED DESIGN
CHARACTER AREA 1- KEY ELEMENTS

3 STOREY UNITS ALONG URBAN EDGES



MIX OF HIGH QUALITY BRICK AND RENDER CLADDING



HIGH QUALITY BALCONIES



CHARACTER AREA 1 MATERIALITY



BEIGE/BUFF BRICK



OFF-WHITE RENDER



ROOF SLATE



03 PROPOSED DESIGN
CHARACTER AREA 2- CREAGH PARKLAND

CHARACTER AREA 2 is located to the north of the scheme and has been named ***'Creagh Parkland'*** due to its relationship to the zoned 'Neighbourhood Park' to the north of the character area. This mix of 2 and 3 storey units have been designed to both overlook the adjacent parkland, and the primary local street to the south which connects 2 of the 3 site entrances.

The units feature a red brick and off-white render elevational treatment with a large amount of semi-detached and townhouse units located in this area. Care has been given to ensure strong, permeable links are provided to the parkland to the north.



FIG: PROPOSED CHARACTER AREA 2





M A T E R I A L P A L E T T E







03 PROPOSED DESIGN
CHARACTER AREA 2- KEY ELEMENTS



CHARACTER AREA 2 MATERIALITY



RED BRICK



OFF-WHITE RENDER

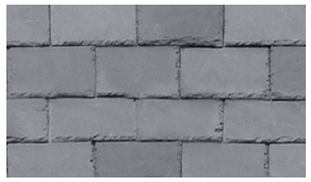

ROOF SLATE



INSET ENTRANCES



FEATURE FRAMED WINDOWS



HIGH QUALITY BRICK AND RENDER CLADDING

03 PROPOSED DESIGN
CHARACTER AREA 3 - SWEEP WALK LANE





M A T E R I A L P A L E T T E







CHARACTER AREA 3 is located to the north-east of the site and incorporates a historic laneway that connects Carnew Road to the Sweep Walk to the north, which the character areas name of **'Sweep Walk Lane'** refers to. A series of stone buildings are located along this lane with the feature brick on the elevational treatments in this character area aiming to reflect the grey colour of the historic stone structures.

Focus has been given to the frontage onto Kilnahue Lane to the north in order create a permeable urban edge to the scheme with 3 storey units and feature crèche located along this road.

FIG: PROPOSED CHARACTER AREA 3

03 PROPOSED DESIGN
CHARACTER AREA 3- KEY ELEMENTS

CONTRAST RENDER FEATURE ELEMENTS



DUAL FRONTED UNITS ON FEATURE CORNERS



BRICK POP UPS TO EMPHASIS SCALE



CHARACTER AREA 3 MATERIALITY



GREY BRICK



OFF-WHITE RENDER



ROOF SLATE

