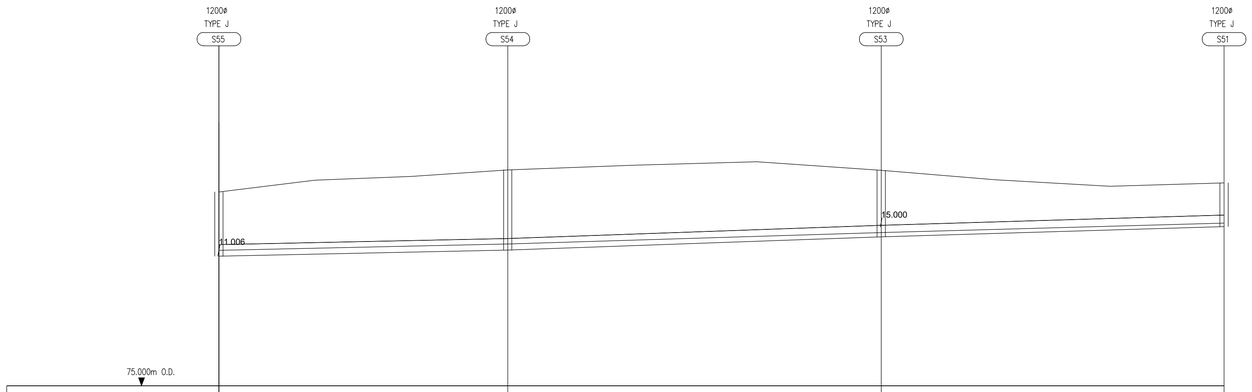

75.000m O.D.									
PN	S14.002			S14.001			S14.000		
DIA (mm)	375			375			375		
SLOPE (1:X)	237.2			141.0			167.5		
COVER LEVEL (m)	81.330	81.716	81.835	82.050	82.203	82.317	82.036	81.728	81.516	81.625
INVERT LEVEL (m)	79.235			79.434	79.434		79.866	79.866		80.200
LENGTH (m)	47.150			60.971			55.959			

STORM SEWER LONGSECTIONS FROM S51 TO S55
HORIZONTAL SCALE 1:500
VERTICAL SCALE 1:100

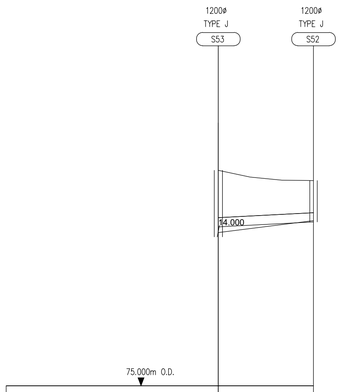

75.000m O.D.				
PN	S15.000			
DIA (mm)	300			
SLOPE (1:X)	97.7			
COVER LEVEL (m)	82.036	81.814	81.714	81.700
INVERT LEVEL (m)	80.191			80.350
LENGTH (m)	15.534			

STORM SEWER LONGSECTIONS FROM S52 TO S53
HORIZONTAL SCALE 1:500
VERTICAL SCALE 1:100

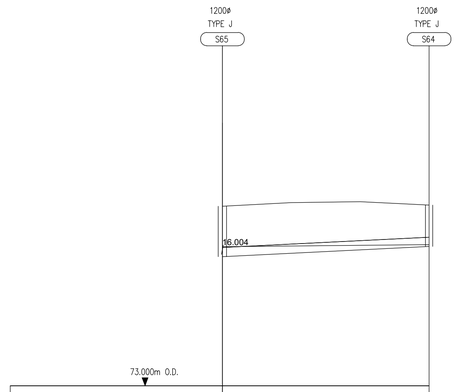

73.000m O.D.				
PN	S18.000			
DIA (mm)	300			
SLOPE (1:X)	101.0			
COVER LEVEL (m)	78.862	78.882	79.012	78.900
INVERT LEVEL (m)	77.216			77.550
LENGTH (m)	33.734			

STORM SEWER LONGSECTIONS FROM S64 TO S65
HORIZONTAL SCALE 1:500
VERTICAL SCALE 1:100

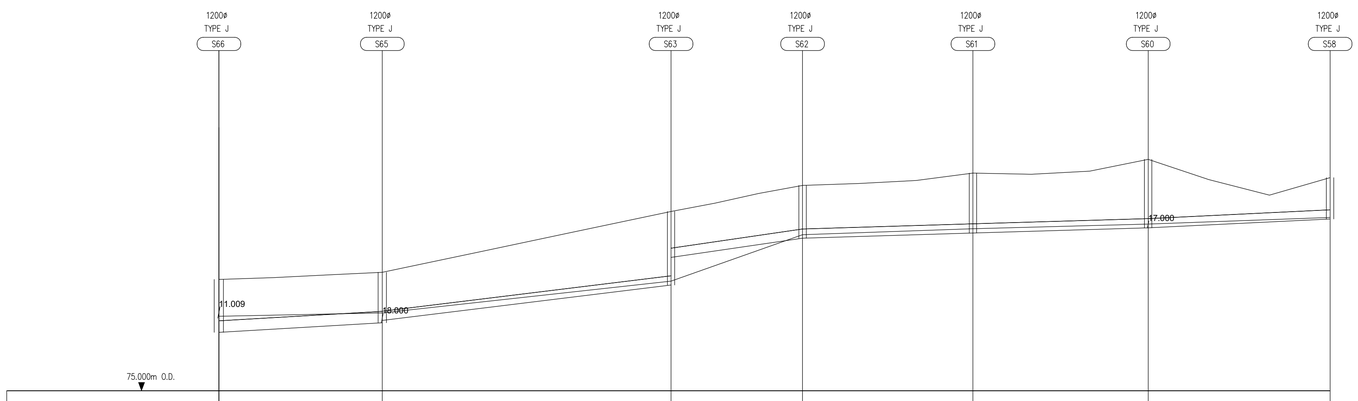

75.000m O.D.														
PN	S16.005			S16.004			S16.003		S16.002		S16.001		S16.000	
DIA (mm)	375			300			300		300		300		300	
SLOPE (1:X)	85.8			40.8			34.1		165.6		167.9		103.8	
COVER LEVEL (m)	78.630	78.691	78.780	78.862	79.525	80.188	80.850	81.121	81.437	81.700	81.763	81.861	82.100	82.062	82.164	82.550	81.892	81.381	81.953
INVERT LEVEL (m)	76.883			76.994			78.150	78.300		79.979	79.979		80.147	80.147		80.317	80.317		80.603	
LENGTH (m)	26.677			47.129			21.471		27.810		28.603		29.697							

STORM SEWER LONGSECTIONS FROM S58 TO S66
HORIZONTAL SCALE 1:500
VERTICAL SCALE 1:100

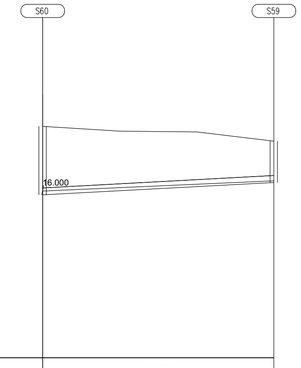

75.000m O.D.				
PN	S17.000			
DIA (mm)	225			
SLOPE (1:X)	93.7			
COVER LEVEL (m)	82.550	82.395	82.368	82.070
INVERT LEVEL (m)	80.317			80.720
LENGTH (m)	37.742			

STORM SEWER LONGSECTIONS FROM S59 TO S60
HORIZONTAL SCALE 1:500
VERTICAL SCALE 1:100

S037

PLANNING DRAWING.
NOT FOR CONSTRUCTION.
ALL LEVELS GIVEN ARE
RELATIVE TO ORDNANCE DATUM.
THIS DRAWING HAS BEEN ISSUED FOR INFORMATION PURPOSES ONLY AND MUST NOT BE USED FOR CONSTRUCTION UNDER ANY CIRCUMSTANCES

NOTES
1. For setting out refer to Architect's drawings.
2. This drawing to be read in conjunction with all other Architectural and Engineering drawings and all other relevant drawings and Specifications.
3. DO NOT SCALE THIS DRAWING. Use figured dimensions only.
4. No part of this document may be reproduced or transmitted in any form or stored in any retrieval system of any nature without the written permission as copyright holder except as agreed for use on the project for which the document was originally issued.
5. Ordnance Survey Ireland Licence Number EN 0074022

Rev. No.	Date	REVISION NOTE	Drn. By	Chkd. By
P1	02.09.2022	ISSUED FOR PLANNING	PB	OS

Architect	Paul Byrne Architects
Project	KilcockWest SHD 2 Boycetown, Kilcock, Co. Kildare.
Title	Storm Sewer Longsections (Sheet 4 of 4)
Dwg. No.	S037-CSC-XX-XX-DR-C-0139

Date	Drn by	Chkd by	Aprvd by	Scale	Revision
MAY 2021	DF	OS	OS	AS SHOWN @ A1	P1

CS Consulting Group
DUBLIN | LONDON | LIMERICK
Head Office
19-22 Dame Street, Dublin 2.
T: +353 (0)1 5480863 F: +353 (0)1 9011355
e: info@csconsulting.ie
w: www.csconsulting.ie

NSAI Certified
Quality I.S. EN ISO 9001:2008
Environment I.S. EN ISO 14001:2004
Energy I.S. EN ISO 50001:2011
Health & Safety OHSAS 18001:2007