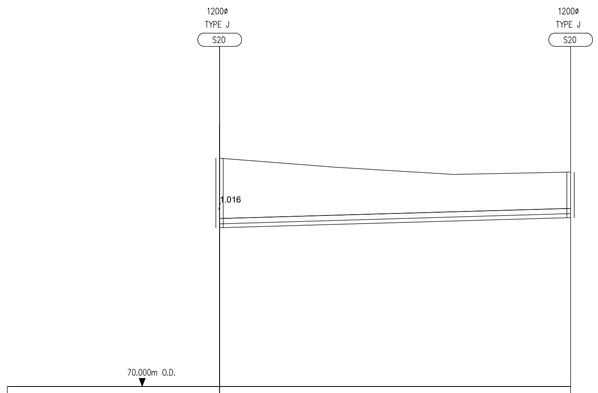

70.000m O.D.					
PN	S9.000				
DIA (mm)	300				
SLOPE (1:X)	172.6				
COVER LEVEL (m)	77.450	77.155	76.922	77.000	
INVERT LEVEL (m)	75.181			75.513	
LENGTH (m)	57.296				

STORM SEWER LONGSECTIONS FROM S33 TO S34
HORIZONTAL SCALE 1:500
VERTICAL SCALE 1:100

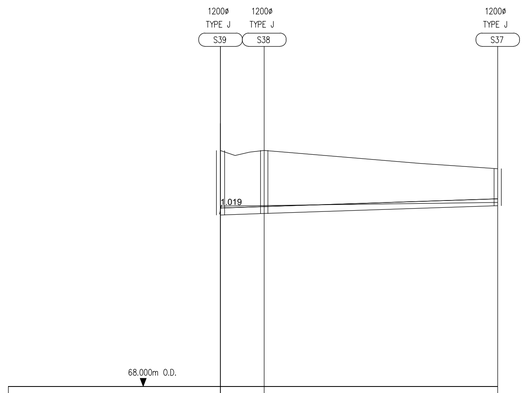

68.000m O.D.					
PN	S10.001	S10.000			
DIA (mm)	225	225			
SLOPE (1:X)	150.0	150.0			
COVER LEVEL (m)	75.700	75.538	75.648	75.705	75.495	75.282	75.110
INVERT LEVEL (m)	73.598	73.646	73.646	73.900	
LENGTH (m)	7.133	38.110			

STORM SEWER LONGSECTIONS FROM S37 TO S39
HORIZONTAL SCALE 1:500
VERTICAL SCALE 1:100

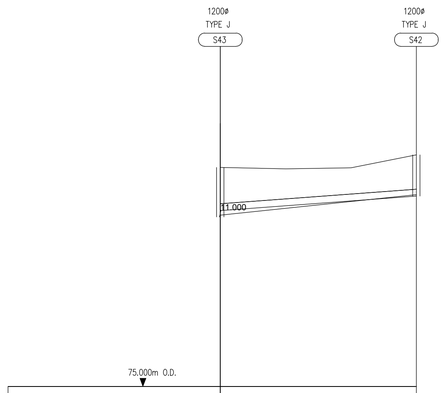

75.000m O.D.				
PN	S12.000			
DIA (mm)	225			
SLOPE (1:X)	67.8			
COVER LEVEL (m)	82.149	82.103	82.137	82.563
INVERT LEVEL (m)	80.741		81.213	
LENGTH (m)	32.005			

STORM SEWER LONGSECTIONS FROM S42 TO S43
HORIZONTAL SCALE 1:500
VERTICAL SCALE 1:100

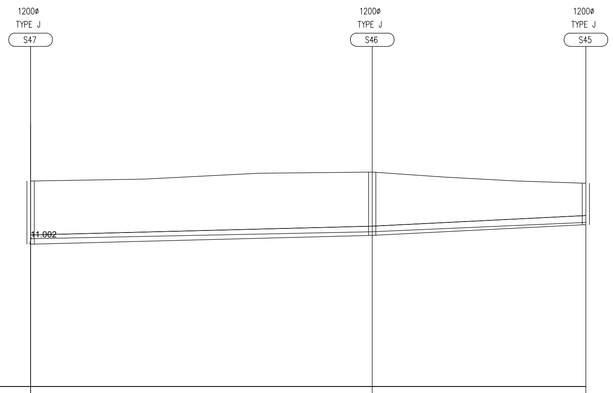

75.000m O.D.							
PN	S13.001			S13.000			
DIA (mm)	300			300			
SLOPE (1:X)	194.2			99.6			
COVER LEVEL (m)	81.706	81.767	81.958	82.000	81.838	81.709	81.632
INVERT LEVEL (m)	78.645			79.932 79.932			80.282
LENGTH (m)	55.769			34.876			

STORM SEWER LONGSECTIONS FROM S45 TO S47
HORIZONTAL SCALE 1:500
VERTICAL SCALE 1:100

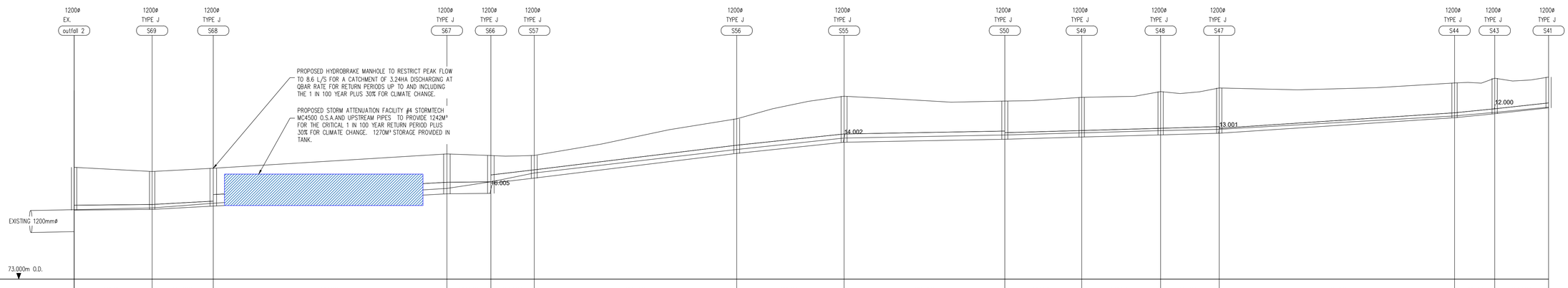

| | | | | | | |