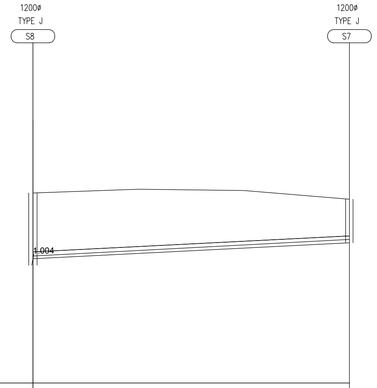

75.000m O.D.					
PN	S3.000				
DIA (mm)	225				
SLOPE (1:X)	99.5				
COVER LEVEL (m)	81.200	81.323	81.280	81.000	
INVERT LEVEL (m)	79.105			79.575	
LENGTH (m)	51.665				

STORM SEWER LONGSECTIONS FROM S7 TO S8
HORIZONTAL SCALE 1:500
VERTICAL SCALE 1:100

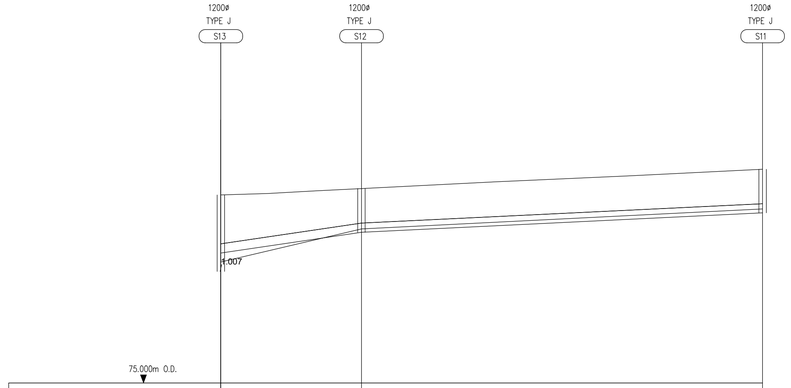

75.000m O.D.							
PN	S4.001		S4.000				
DIA (mm)	300		300				
SLOPE (1:X)	33.8		103.6				
COVER LEVEL (m)	81.138	81.186	81.267	81.345	81.565	81.759	81.977
INVERT LEVEL (m)	79.241		79.920	79.920			80.552
LENGTH (m)	22.953		65.477				

STORM SEWER LONGSECTIONS FROM S11 TO S13
HORIZONTAL SCALE 1:500
VERTICAL SCALE 1:100

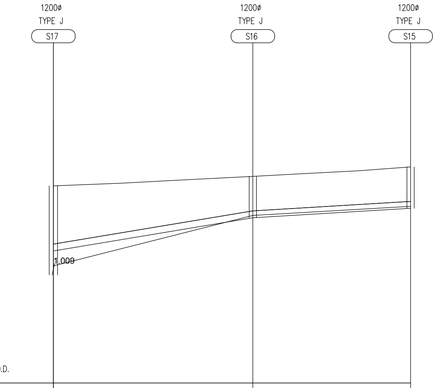

75.000m O.D.							
PN	S5.001			S5.000			
DIA (mm)	225			225			
SLOPE (1:X)	30.0			83.6			
COVER LEVEL (m)	81.435	81.517	81.631	81.744	81.835	81.925	82.052
INVERT LEVEL (m)	79.309			80.394 80.394			80.702
LENGTH (m)	32.555			25.759			

STORM SEWER LONGSECTIONS FROM S15 TO S17
HORIZONTAL SCALE 1:500
VERTICAL SCALE 1:100

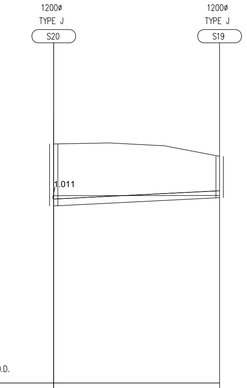

72.000m O.D.				
PN	S6.000			
DIA (mm)	225			
SLOPE (1:X)	99.2			
COVER LEVEL (m)	79.800	79.836	79.742	79.400
INVERT LEVEL (m)	77.717			78.050
LENGTH (m)	27.069			

STORM SEWER LONGSECTIONS FROM S19 TO S20
HORIZONTAL SCALE 1:500
VERTICAL SCALE 1:100

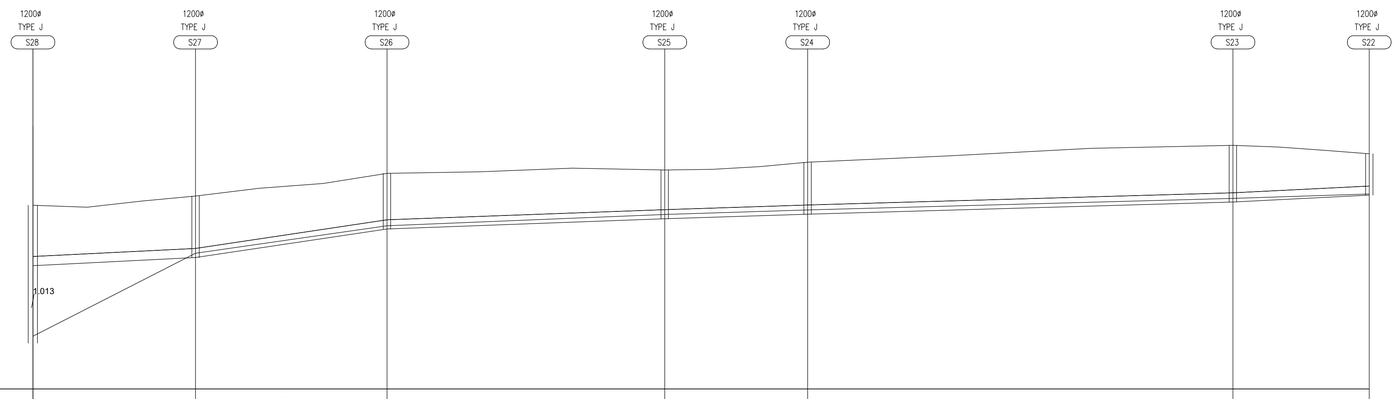

75.000m O.D.													
PN	S7.005			S7.004			S7.003			S7.002		S7.001			S7.000
DIA (mm)	300			300			300			300		300			300
SLOPE (1:X)	100.0			33.5			136.5			155.1		173.8			100.7
COVER LEVEL (m)	81.000	80.936	81.134	81.300	81.555	81.713	82.040	82.090	82.209	82.150	82.172	82.261	82.403	82.613	82.858	82.956	82.899	82.796	82.678
INVERT LEVEL (m)	79.026			79.292 79.292			80.225 80.225			80.557 80.557			80.708 80.708			81.107 81.107			81.328
LENGTH (m)	26.556			31.246			45.336			23.326		69.421				22.261			

STORM SEWER LONGSECTIONS FROM S2 TO S28
HORIZONTAL SCALE 1:500
VERTICAL SCALE 1:100

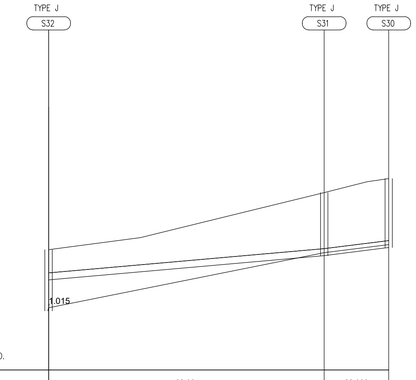

74.000m O.D.					
PN	S8.001			S8.000	
DIA (mm)	225			225	
SLOPE (1:X)	56.8			40.0	
COVER LEVEL (m)	77.930	78.324	79.059	79.794	79.972	80.149	80.250
INVERT LEVEL (m)	76.945			77.737 77.737			78.000
LENGTH (m)	44.991			10.529			

STORM SEWER LONGSECTIONS FROM S30 TO S32
HORIZONTAL SCALE 1:500
VERTICAL SCALE 1:100

S037

PLANNING DRAWING.
NOT FOR CONSTRUCTION.
ALL LEVELS GIVEN ARE
RELATIVE TO ORDNANCE DATUM.
THIS DRAWING HAS BEEN ISSUED FOR INFORMATION PURPOSES ONLY AND MUST NOT BE USED FOR CONSTRUCTION UNDER ANY CIRCUMSTANCES

NOTES
1. For setting out refer to Architect's drawings.
2. This drawing to be read in conjunction with all other Architectural and Engineering drawings and all other relevant drawings and Specifications.
3. DO NOT SCALE THIS DRAWING. Use figured dimensions only.
4. No part of this document may be reproduced or transmitted in any form or stored in any retrieval system of any nature without the written permission as copyright holder except as agreed for use on the project for which the document was originally issued.
5. Ordnance Survey Ireland Licence Number EN 0074022

Rev. No.	Date	REVISION NOTE	Drn. By	Chkd. By
P1	02.09.2022	ISSUED FOR PLANNING	JS	OS

Architect	Paul Byrne Architects				
Project	KilcockWest SHD 2 Boycetown, Kilcock, Co. Kildare.				
Title	Storm Sewer Longsections (Sheet 2 of 4)				
Dwg. No.	S037-CSC-XX-XX-DR-C-0137				
Date	Drn by	Chkd by	Aprvd by	Scale	Revision
MAY 2021	DF	OS	OS	AS SHOWN @ A1	P1

CS Consulting Group
DUBLIN | LONDON | LIMERICK
Head Office
19-22 Dame Street, Dublin 2.
T: +353 (0)1 5480863 F: +353 (0)1 9011355
e: info@csconsulting.ie
w: www.csconsulting.ie

NSAI Certified
Quality I.S. EN ISO 9001:2008
Environment I.S. EN ISO 14001:2004
Energy I.S. EN ISO 50001:2011
Health & Safety OHSAS 18001:2007