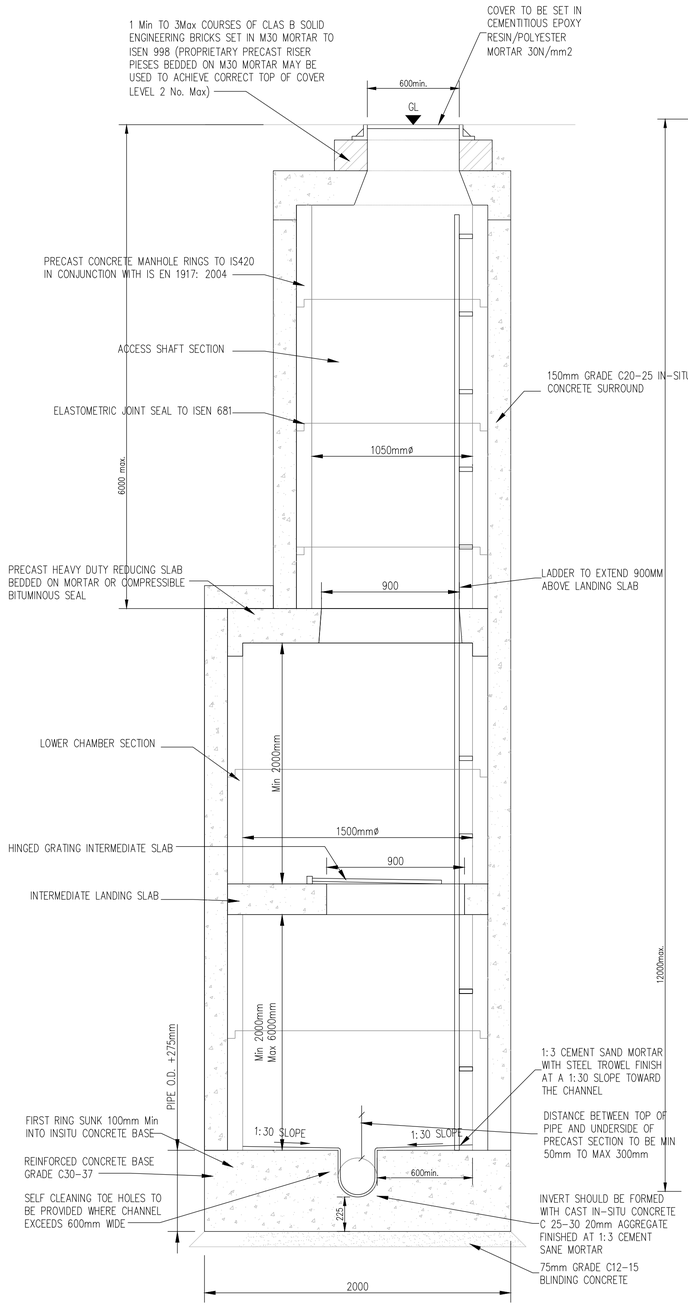

SECTION A-A
SCALE 1:20

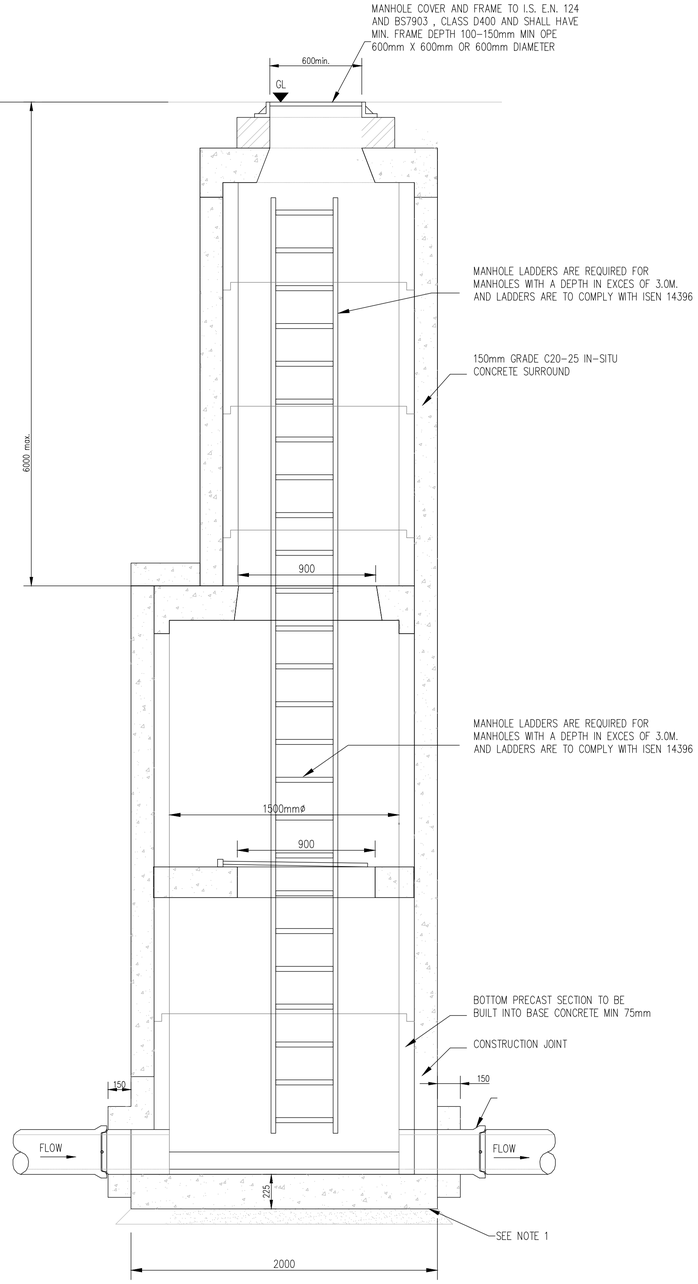

SECTION B-B
SCALE 1:20

MANHOLE DETAILS FOR DEPTHS BETWEEN 6 METRES AND 12 METRES
SCALE : 1/20

NOTES FOR PRECAST MANHOLES 6M TO 12M DEPTH

1. ALL DIMENSIONS ARE IN MILLIMETERS (mm) UNLESS NOTED OTHERWISE.
2. PRECAST MANHOLES UNITS; COMPLYING WITH REQUIREMENTS OF IS EN 1917 AND BS 5911-PART 3.
3. MORTAR TO BE TO CLAUSE 507.13.
4. SAFETY CHAIN REQUIRED WHERE PIPE IS GREATER THAN 600MM DIAMETER.
5. THICKER MANHOLE BASE REQUIRED FOR SEWERS IN EXCESS OF 6m DEEP WHERE THE SIZE IS GREATER THAN THE STANDARD MINIMUM SIZE
6. APPROVED PRE-CAST CONCRETE BASES MAY BE USED INCORPORATING CHANNELS, BENCHING ETC. SUBJECT TO IRISH WATER APPROVAL AND COMPLYING WITH BS 5911-PART 42002.
7. STRUCTURAL DESIGN AND REINFORCEMENT DETAILS TO BE PROVIDED BY THE DEVELOPER AND SUBMITTED TO IRISH WATER FOR REVIEW.
8. MANHOLES GREATER THAN 6m IN DEPTH WILL REQUIRE A DETAILED STRUCTURAL DESIGN AND BE SUBJECT TO IRISH WATER APPROVAL.
9. MANHOLE ROOFS SHOULD CONSIST OF RE-INFORCED CONCRETE SLAB OF IN-SITU CONCRETE, C30/37, WITH A MINIMUM THICKNESS OF 225mm DESIGNED TO CARRY ALL LIVE AND DEAD LOADS, ALTERNATIVELY APPROVED PRE-CAST CONCRETE ROOF SLABS MAY BE USED SUBJECT TO IRISH WATER APPROVAL AND COMPLIANCE WITH BS 5911 PART 4; 2002.
10. COVER AND FRAMES SHALL BE SUITABLE FOR ROAD AND TRAFFIC CONDITIONS SUBJECT TO APPROVAL FROM IRISH WATER.
11. 200mm ALL AROUND, 100mm DEEP CONCRETE PLINTH WITH PROTECTIVE STAINLESS STEEL METAL BAND AROUND COVERS IN GREEN AREAS.
12. ALL CHAMBERS TO BE CHECKED FOR UPLIFT BY THE DEVELOPER BASED ON GROUND CONDITIONS WITHIN THE SITE. SHOULD ANTI FLOATATION MEASURES BE REQUIRED THEY SHALL BE SUBJECTED TO APPROVAL FROM IRISH WATER.
13. ALL CONCRETE TO BE IN ACCORDANCE WITH IS EN 206; 2013.
14. ANY SPECIAL ROAD REINSTATEMENT AROUND COVER AND FRAME SHALL BE TO ROAD AUTHORITY'S REQUIREMENTS
15. NEW ROAD CONSTRUCTION AND SURFACE FINISH TO BE TO ROAD AUTHORITY'S REQUIREMENTS.
16. EXISTING ROAD REINSTATEMENT TO COMPLY WITH CURRENT VERSION OF "GUIDELINES FOR MANAGING OPENINGS IN PUBLIC ROADS" BY THE DEPT. OF TRANSPORT INFRASTRUCTURE IRELAND REQUIREMENTS
17. CLASS D400 OR E600 MANHOLE COVER AND FRAME TO IS/EN 124. 150mm DEEP FRAME FOR ROADS AND 100mm DEEP FOR FOOTPATHS AND GREEN AREAS. NON-ROCK DESIGN, CLOSED KEYWAYS, MANUFACTURED FROM SPHEROIDAL GRAPHITE CAST IRON (DUCTILE CAST IRON), 600x600 (600mmø) CLEAR OPENING, COVER AND FRAME COATED IN BITUMEN OR OTHER PAPROVED MATERIAL, COVER TO HAVE A MINIMUM MASS OF 140KG/m², FRAME BEARING AREA SHALL BE 80,000mm² MIN., FRAMES SHALL BE DESIGNED TO PREVENT COVERS FALLING INTO MANHOLE. FRAMES SHALL BE BEDDED ON APPROVED MORTAR TO MANUFACTURERS INSTRUCTIONS.
18. PROPRIETARY WATERTIGHT PCC MANHOLE RING SYSTEMS WITH A WALL THICKNESS>125mm, & A WATER TIGHT JOINT SEALING SYSTEM, MAY BE USED WITHOUT CONCRETE SURROUND, SUBJECT TO THE GROUNDWATER LEVEL AT THE MANHOLE BEING LOW AND SUBJECT TO REVIEW BY IRISH WATER.

MANHOLE PIPE DIAMETER A	CHAMBER INTERNAL DIAMETER B
225mmø	1500mmø
300mmø	1500mmø
375mmø	1500mmø
450mmø	1500mmø
525mmø	1500mmø
600mmø	1500mmø
675mmø	1500mmø
750mmø	1500mmø
900mmø	1500mmø
1050mmø	2100mmø
1200mmø	2100mmø

NOTE:
CHAMBER COVERS TO BE CLASS D400 TO ARCHITECTS SPECIFICATIONS

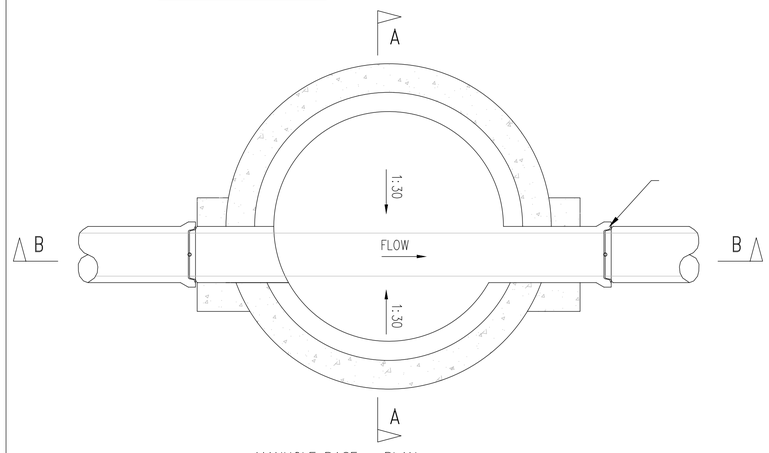

MANHOLE BASE - PLAN
SCALE 1:20

S037

PLANNING DRAWING.
NOT FOR CONSTRUCTION.
ALL LEVELS GIVEN ARE RELATIVE TO ORDNANCE DATUM.
THIS DRAWING HAS BEEN ISSUED FOR INFORMATION PURPOSES ONLY AND MUST NOT BE USED FOR CONSTRUCTION UNDER ANY CIRCUMSTANCES

NOTES
1. For setting out refer to Architect's drawings.
2. This drawing to be read in conjunction with all other Architectural and Engineering drawings and all other relevant drawings and Specifications.
3. DO NOT SCALE THIS DRAWING. Use figured dimensions only.
4. No part of this document may be reproduced or transmitted in any form or stored in any retrieval system of any nature without the written permission as copyright holder except as agreed for use on the project for which the document was originally issued.
5. Ordnance Survey Ireland Licence Number EN 0074022

Rev. No.	Date	REVISION NOTE	Drn. By	Chkd. By
P1	02.09.2022	ISSUED FOR PLANNING	JS	OS

Architect	Paul Byrne Architects
Project	KilcockWest SHD 2 Boycetown, Kilcock, Co. Kildare.
Title	Manhole Details for Depth 6m - 12m
Dwg. No.	S037-CSC-XX-XX-DR-C-0127

Date	Drn by	Chkd by	Aprvd by	Scale	Revision
MAY 2021	DF	NB	OS	AS SHOWN @ A1	P1

CS Consulting Group
DUBLIN | LONDON | LIMERICK
Head Office
19-22 Dame Street, Dublin 2.
T: +353 (0)1 5480863
e: info@csconsulting.ie
w: www.csconsulting.ie
NSAI Certified
Quality I.S. EN ISO 9001:2008
Environment I.S. EN ISO 14001:2004
Energy I.S. EN ISO 50001:2011
Health & Safety OHSAS 18001:2007