

NOTES:

1. EDGES OF EXISTING CARRIAGE WAY TO BE CUT BACK BY 0.5m WITH A ROTARY SAW TO FORM A VERTICAL FACE AND PRIMED IN ACCORDANCE WITH CLAUSE 10.

2. WHERE THE ROAD BASE IS TO BE LAID IN TWO LAYERS, THE UPPER LAYER OF ROAD BASE SHOULD BE STEPPED INTO THE EXISTING PAVEMENT BY 1m MIN. WITH THE BINDER AND SURFACE COURSE TO BE EACH STEPPED IN A FURTHER 1m MIN. RESPECTIVELY.

TRANSVERSE JOINT BETWEEN NEW & EXISTING ROAD TII CC-SCD-00703.

SCALE: 1:25

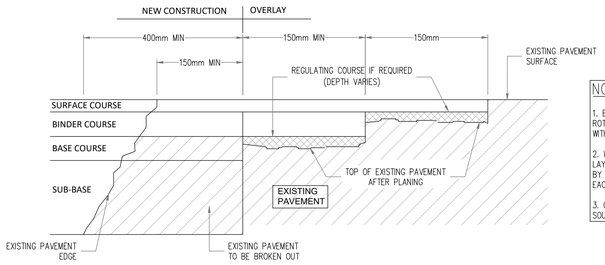

NOTES:

1. EDGES OF EXISTING CARRIAGEWAY TO BE CUT BACK BY 400mm WITH A ROTARY SAW TO FORM A VERTICAL FACE AND PRIMED IN ACCORDANCE WITH CLAUSE 10.

2. WHERE THE ROAD BASE IS TO BE LAID IN TWO LAYERS, THE UPPER LAYER OF ROAD BASE SHOULD BE STEPPED INTO THE EXISTING PAVEMENT BY 150mm MIN. WITH THE BINDER COURSE AND SURFACE COURSE TO BE EACH STEPPED IN A FURTHER 150mm MIN. RESPECTIVELY.

3. CUTBACK AND BENCHING IN SHALL BE INCREASED AS NECESSARY UNTIL SOUND CLEAN MATERIAL IS ENCOUNTERED.

LONGITUDINAL JOINT BETWEEN NEW AND EXISTING ROAD TII CC-SCD-00704.

SCALE: 1:25

NOTE:

1. ALL DIMENSIONS IN MILLIMETERS UNLESS STATED OTHERWISE.

2. ALL STEELWORK TO BE GRADE S235 J2 IN ACCORDANCE WITH IS.EN 12899-1.

3. ALL STEELWORK TO BE HOT-DIP GALVANIZED IN ACCORDANCE WITH IS.EN ISO 1461.

4. CHECK THE UNDERGROUND SERVICES AT AN EARLY STAGE (AND ACCOMMODATE AS MAY BE NECESSARY).

5. REFER TO TRAFFIC SIGN MANUAL FOR ALL STANDARD DIMENSION.

6. POST EMBEDMENT TO BE 0.75xD

7.ORIENTATION OF SIGN:
- ON A STRAIGHT ROAD – HORIZONTAL AXIS 96° AWAY FROM THE GENERAL ALIGNMENT OF THE LEFT-HAND SIDE OF THE CARRIAGEWAY
- ON A RIGHT-HAND BENDS – 90° ANGEL TO A LINE TANGENTIAL TO THE LEFT-HAND EDGE OF CARRIAGEWAY
- ON A LEFT-HAND BENDS – 95° FROM A LINE JOINING THE EDGE OF CARRIAGEWAY 200m IN ADVANCE OF THE SIGN

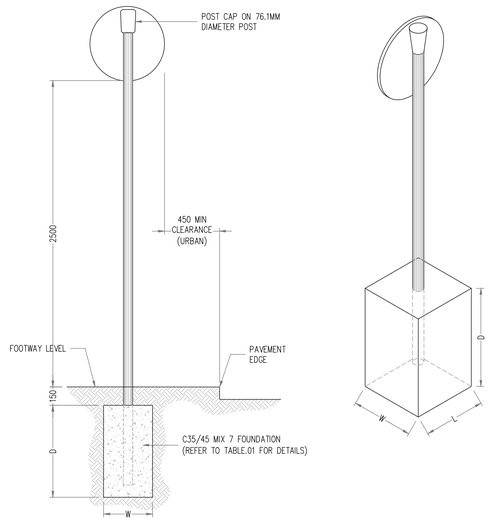

TRAFFIC SIGN (Single Post)

SCALE: N.T.S

TABLE.01

SUMMARY	TRADITIONAL FOUNDATION OPTION 1			TRADITIONAL FOUNDATION OPTION 2			PLANTED FOUNDATION		POST DETAILS		
SIGN FACE AREA	L	W	D	L	W	D	Ø	D	Ø	WALL THICKNESS	TYPE
≤0.283 m² (Ø600mm)	0.75	0.40	0.55	0.55	0.55	0.55	0.40	0.50	76.1	3.2	CHS
0.283≤AREA≤0.5625m² (BETWEEN 600Ø & 750x750)	0.75	0.65	0.65	0.70	0.70	0.70	0.40	0.65	76.1	3.2	CHS
0.5625≤AREA≤1.189m² (750X750 TO 940x1265m²)	1.00	0.75	0.50	0.80	0.80	0.80	0.40	0.75	76.1	3.2	CHS

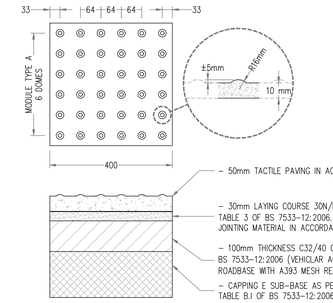

TACTILE PAVING AT CONTROLLED/UNCONTROLLED PEDESTRIAN CROSSINGS

SCALE: 1:10

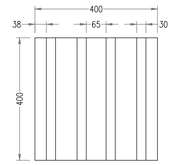

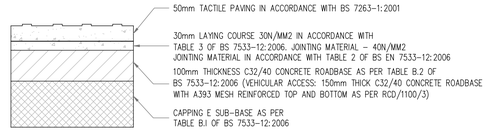

CORDUROY TACTILE PAVING AT CONTROLLED PEDESTRIAN CROSSINGS.

SCALE: 1:10

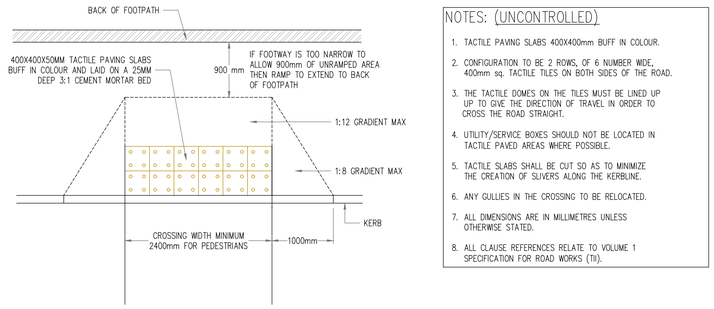

NOTES: (UNCONTROLLED)

1. TACTILE PAVING SLABS 400X400mm BUFF IN COLOUR.
2. CONFIGURATION TO BE 2 ROWS, OF 6 NUMBER WIDE, 400mm sq. TACTILE TILES ON BOTH SIDES OF THE ROAD.
3. THE TACTILE DOMES ON THE TILES MUST BE LINED UP UP TO GIVE THE DIRECTION OF TRAVEL IN ORDER TO CROSS THE ROAD STRAIGHT.
4. UTILITY/SERVICE BOXES SHOULD NOT BE LOCATED IN TACTILE PAVED AREAS WHERE POSSIBLE.
5. TACTILE SLABS SHALL BE CUT SO AS TO MINIMIZE THE CREATION OF SLIVERS ALONG THE KERBLINE.
6. ANY GULLIES IN THE CROSSING TO BE RELOCATED.
7. ALL DIMENSIONS ARE IN MILLIMETRES UNLESS OTHERWISE STATED.
8. ALL CLAUSE REFERENCES RELATE TO VOLUME 1 SPECIFICATION FOR ROAD WORKS (TII).

TACTILE PAVING PLAN AT UNCONTROLLED PEDESTRIAN CROSSINGS.

SCALE: 1:50

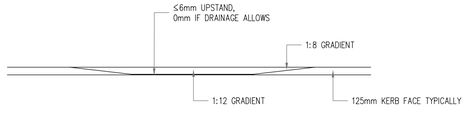

TACTILE PAVING ELEVATION.

SCALE: 1:50

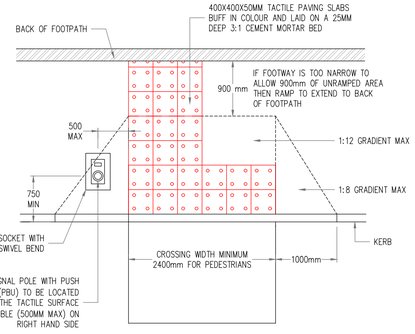

TACTILE PAVING PLAN AT CONTROLLED PEDESTRIAN CROSSING.

SCALE: 1:50

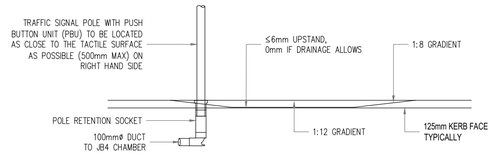

TACTILE PAVING ELEVATION.

SCALE: 1:50

NOTES:
1. TACTILE PAVING SLABS 400X400mmX50mm IN COLOUR.
2. L SHAPED CONFIGURATION OF TACTILE TILES ON BOTH SIDES OF THE ROAD.
3. LEG OF L TO BE THREE SLABS WIDE TO ENSURE A VISUALLY IMPAIRED PERSON LOCATES THE CROSSING WHEN WALKING ALONG THE PAVEMENT TOP OF L TO BE TWO SLABS WIDE IN THE DISHING.
4. THE TACTILE DOMES ON THE TILES MUST BE LINED UP UP TO GIVE THE DIRECTION OF TRAVEL IN ORDER TO CROSS THE ROAD STRAIGHT.
5. TRAFFIC SIGNAL POLE MUST BE PLACED ON THE VISUALLY IMPAIRED PERSONS RIGHT HAND SIDE WHEN THEY ARE FACING THE ROAD TO CROSS – Max. 500mm FROM THE PERSON (THIS IS TO ENSURE THE POLE CAN BE REACHED WITHOUT MOVING OFF THE TACTILE SURFACE) AND Max. 800mm FROM THE KERB EDGE AND Min. 600mm FROM THE KERB EDGE.
6. UTILITY/SERVICE BOXES SHOULD NOT BE LOCATED IN TACTILE PAVED AREAS WHERE POSSIBLE.
7. ANY GULLIES IN THE CROSSING TO BE RELOCATED.
8. ALL DIMENSIONS ARE IN MILLIMETRES UNLESS OTHERWISE STATED.

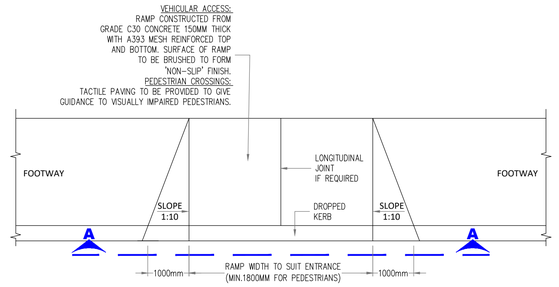

PLAN OF RAMP



VIEW A-A

NOTES:
1. A RAISED LIP OF 25mm SHOULD BE USED FOR VECHICULAR ENTRANCES.
2. A RAISED LIP OF 0 – 6mm SHOULD BE USER FOR PEDESTRIAN CROSSINGS.
3. REFER TO TII CC-SCD-01101 FOR PRE-CAST KERB DIMENSIONS.
4. REFER TO TII CC-SCD-01101 FOR IN-SITU CONCRETE KERB DIMENSIONS.
5. TACTILE PAVING IS TO BE PROVIDED AT ALL PEDESTRIAN CROSSINGS, ADVICE ON THE EXACT LOCATION AND DIMENSIONS CAN BE FOUND FROM THE UK DEPARTMENT FOR TRANSPORT, MOBILITY INCLUSION UNIT DOCUMENT, "GUIDANCE ON THE USE OF TACTILE PAVING"

DROPPED KERB RAMP CC-SCD-01103

SCALE: 1:20

S037

PLANNING DRAWING.
NOT FOR CONSTRUCTION.
ALL LEVELS GIVEN ARE RELATIVE TO ORDNANCE DATUM.
THIS DRAWING HAS BEEN ISSUED FOR INFORMATION PURPOSES ONLY AND MUST NOT BE USED FOR CONSTRUCTION UNDER ANY CIRCUMSTANCES

NOTES
1. For setting out refer to Architect's drawings.
2. This drawing to be read in conjunction with all other Architectural and Engineering drawings and all other relevant drawings and Specifications.
3. DO NOT SCALE THIS DRAWING. Use figured dimensions only.
4. No part of this document may be reproduced or transmitted in any form or stored in any retrieval system of any nature without the written permission as copyright holder except as agreed for use on the project for which the document was originally issued.
5. Ordnance Survey Ireland Licence Number EN 0074022

Rev. No.	Date	REVISION NOTE	Drn. By	Chkd. By
P1	02.09.2022	ISSUED FOR PLANNING	JS	OS

Architect	Paul Byrne Architects
Project	KilcockWest SHD 2 Boycetown, Kilcock, Co. Kildare.
Title	Road Details Sheet 1 of 2
Dwg. No.	S037-CSC-XX-XX-DR-C-0125

Date	Drn by	Chkd by	Aprvd by	Scale	Revision
FEB 2021	JS	NB	OS	AS SHOWN @ A1	P1

CS Consulting Group
DUBLIN | LONDON | LIMERICK
Head Office
19-22 Dame Street, Dublin 2.
T: +353 (0)1 5480863
e: info@csconsulting.ie
w: www.csconsulting.ie

NSAI Certified
Quality I.S. EN ISO 9001:2008
Environment I.S. EN ISO 14001:2004
Energy I.S. EN ISO 50001:2011
Health & Safety OHSAS 18001:2007