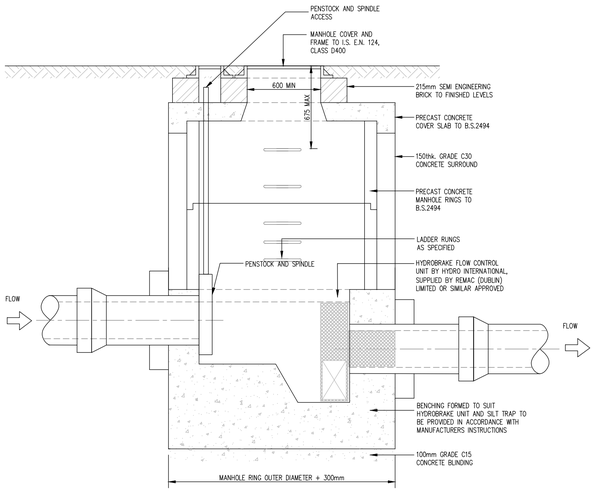


HYDROBRAKE CHAMBER
MAX. DEPTH G.L. TO I.L. – 3.0m
SCALE 1:25

## NOTES :

1. DO NOT SCALE FROM THIS DRAWING USE STATED DIMENSIONS ONLY. IF IN DOUBT CONSULT THE ENGINEER.
2. LEVELS REFER TO O.S. DATUM MALIN HEAD.
3. THIS DRAWING SHALL BE READ IN CONJUNCTION WITH THE ALL OF THE CONTRACT DOCUMENTS IN PARTICULAR THE ARCHITECT'S, LANDSCAPE ARCHITECT'S AND SERVICE ENGINEER'S SITE LAYOUT DRAWINGS.
4. ALL CIVIL WORKS SHALL BE COMPLETED IN ACCORDANCE WITH SPECIFICATIONS.
5. THE CONTRACTOR IS SOLELY RESPONSIBLE FOR LOCATING, PROTECTING AND MAINTAINING ALL EXISTING SERVICES WITHIN THE SITE BOUNDARY. THE ENGINEER HAS SHOWN KNOW SERVICES ON THE DRAWINGS BUT GIVES NO GUARANTEE THAT THESE ARE THE ONLY SERVICES WITHIN THE SITE BOUNDARY. THE CONTRACTOR SHALL CONTACT THE RELEVENT STATUTORY AND PRIVATE UTILITY COMPNIES AND CONFIRM THE LOCATION OF THEIR PLANT FOR HIMSELF.
6. THE CONTRACTOR SHALL NOTIFY THE ENGINEER IN WRITING OF THE NAME AND LOCATION OF ALL TIPS USED FOR THE DISPOSAL OF MATERIAL OFF SITE.
7. THE CONTRACTOR SHALL ENSURE THAT ADEQUATE PROVISIONS ARE IN PLACE TO PREVENT THE SPREAD OF DIRT, MUD AND SITE MATERIAL ON THE PUBLIC ROAD. THE CONTRACTOR SHALL ENSURE THAT THE PUBLIC ROADS AROUND THE SITE ARE CLEANED ON A REGULAR BASIS, OR AS DIRECTED BY THE ENGINEER, WITH A MECHANICAL SUCTION SWEEPER.
8. THE CONTRACTOR SHALL TAKE ALL NECESSARY PRECAUTIONS TO ENSURE THAT NOISE AND DUST ARE MINIMISED.
9. BLINDING CONCRETE SHALL BE GRADE 15N20. BLINDING SHALL BE A MINIMUM OF 100MM THICK. ALL STRUCTURAL CONCRETE SHALL BE GRADE 30N20 UNLESS SPECIFIED OTHERWISE ELSEWHERE.
10. ALL EXPOSED CONCRETE FINISHES SHOULD BE FAIR FACED FINISHES UNLESS SPECIFIED OTHERWISE ELSEWHERE.
11. HANDRAILS SHALL BE GRADE 316 STAINLESS STEEL. SHOP DRAWINGS SHALL BE SUBMITTED FOR APPROVAL PRIOR TO MANUFACTURE.

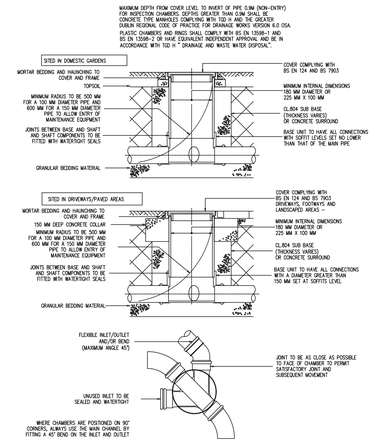


TYPICAL ARMSTRONG JUNCTION CHAMBER DETAIL
– (Flexible material detail)
NOT TO SCALE

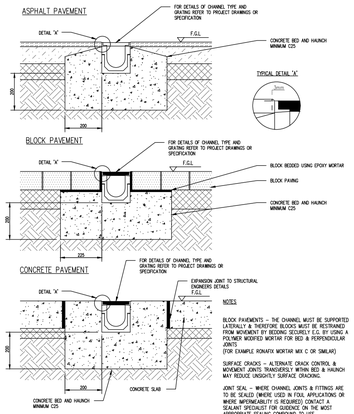


TYPICAL CHANNEL DETAILS
NOT TO SCALE

NOTES

BLOCK PAVEMENTS – THE CHANNEL MUST BE SUPPORTED LATERALLY & THEREFORE BLOCKS MUST BE RESTRAINED FROM MOVEMENT BY BEDDING SECURELY E.G. BY USING A POLYMER MODIFIED MORTAR FOR BED & PERPENDICULAR JOINTS
(FOR EXAMPLE ROMATIX MORTAR MIX C OR SIMILAR)

SURFACE CRACKS – ULTIMATE CRACK CONTROL & MOVEMENT JOINTS TRANSVERSELY DOWN EDI TROFL & HAUNCH MAY REVEAL UNSIGHTLY SURFACE CRACKING.

JOINT SEAL – WHERE CHANNEL JOINTS & FITTINGS ARE TO BE SEALED (WHERE USED IN FOUL APPLICATIONS OR WHERE IMPERMEABILITY IS REQUIRED) CONTACT A SEALANT SPECIALIST FOR GUIDENCE ON THE MOST APPROPRIATE SEALING COMPOUND TO USE.

SURFACE PROTECTION – IN ASPHALT PAVEMENTS AVOID CONTACT BETWEEN COMPACTION EQUIPMENT AND CHANNEL/GRATING. THIS MAY BE ACHIEVED BY ENSURING THAT THE FINISHED SURFACE LEVEL LIES ABOVE THE GRATING LEVEL (BY AT LEAST 3MM) STONES SHOULD BE REMOVED PRIOR TO LAYING/ROLLING WEARING COURSE.

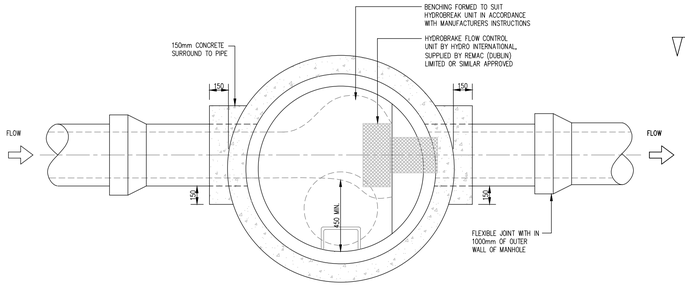


PLAN ON HYDROBRAKE CHAMBER
MAX. DEPTH G.L. TO I.L. –3.0m
SCALE 1:25

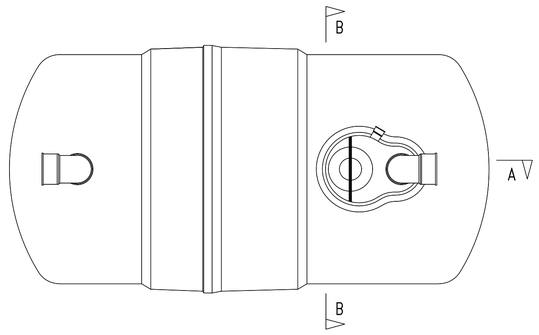


KLARGESTER CLASS 1 INTERCEPTOR (O.S.A.)
PLAN VIEW
SCALE 1:25

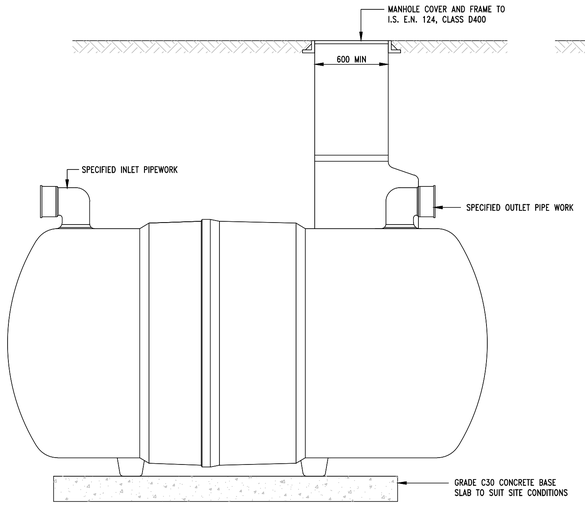


KLARGESTER CLASS 1 INTERCEPTOR (O.S.A.)
SECTION A–A
SCALE 1:25

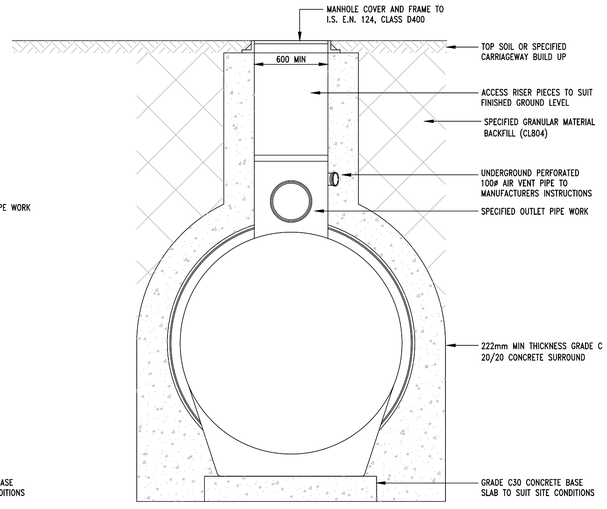


KLARGESTER CLASS 1 INTERCEPTOR (O.S.A.)
SECTION B–B
SCALE 1:25

S037

PLANNING DRAWING.
NOT FOR CONSTRUCTION.
ALL LEVELS GIVEN ARE
RELATIVE TO ORDNANCE DATUM.
THIS DRAWING HAS BEEN ISSUED FOR INFORMATION PURPOSES ONLY AND MUST NOT BE USED FOR CONSTRUCTION UNDER ANY CIRCUMSTANCES

NOTES
1. For setting out refer to Architect's drawings.
2. This drawing to be read in conjunction with all other Architectural and Engineering drawings and all other relevant drawings and Specifications.
3. DO NOT SCALE THIS DRAWING. Use figured dimensions only.
4. No part of this document may be reproduced or transmitted in any form or stored in any retrieval system of any nature without the written permission as copyright holder except as agreed for use on the project for which the document was originally issued.
5. Ordnance Survey Ireland Licence Number EN 0074022

| Rev. No. | Date | REVISION NOTE | Drn. By | Chkd. By |
|---|---|---|---|---|
| P1 | 02.09.2022 | ISSUED FOR PLANNING | JS | OS |

| | |
|---|---|
| Architect | Paul Byrne Architects |
| Project | Kilcock West SHD 2<br>Boycetown, Kilcock, Co. Kildare. |
| Title | Drainage Details<br>Sheet 3 of 3 |
| Dwg. No. | S037-CSC-XX-XX-DR-C-0121 |

| Date | Drn by | Chkd by | Aprvd by | Scale | Revision |
|---|---|---|---|---|---|
| FEB 2021 | JS | NB | OS | AS SHOWN @ A1 | P1 |

CS Consulting Group
DUBLIN | LONDON | LIMERICK
Head Office
19-22 Dame Street, Dublin 2.
T: +353 (0)1 5480863
e: info@csconsulting.ie
w: www.csconsulting.ie

NSAI Certified
Quality I.S. EN ISO 9001:2008
Environment I.S. EN ISO 14001:2004
Energy I.S. EN ISO 50001:2011
Health & Safety OHSAS 18001:2007