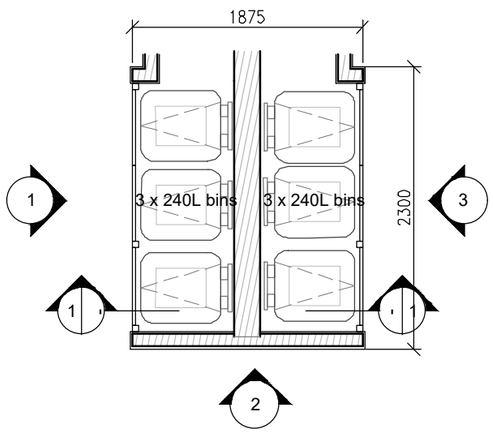

1 FLOOR PLAN

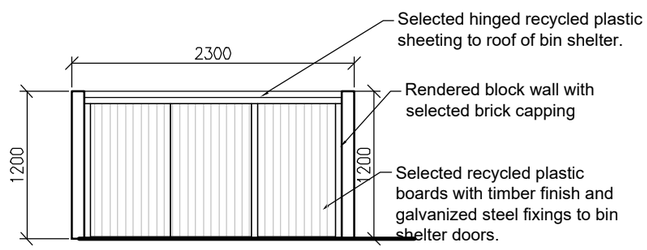

2 ELEVATION 1

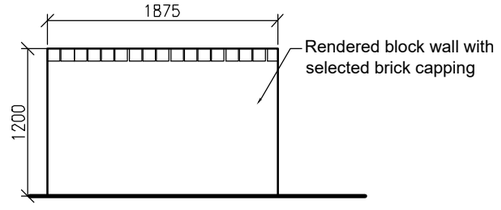

3 ELEVATION 2

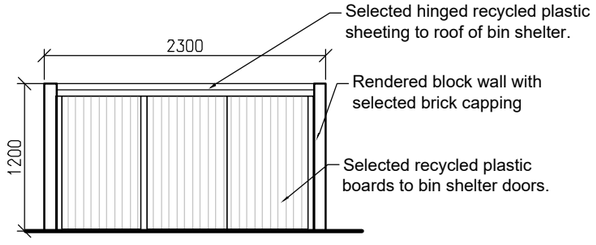

4 ELEVATION 3

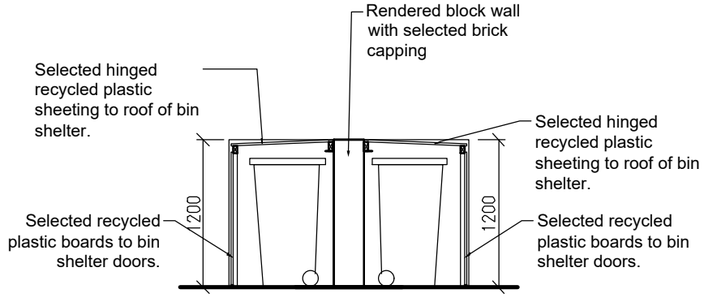

5 SECTION 1-1

Do not scale. Figure dimesions only. Architect to be informed of any discrepancies.
This drawing is issued for planning purposes only, not for construction.

REV	DATE	DRN	DESCRIPTION
A	05.08.22	MR	Issue for SHD Application
A	29.08.22	MR	Issue for Final submission

PBA
PAUL BYRNE ARCHITECTS

©

Priory
Stillorgan Road
Blackrock
Dublin A94 X2H1

Tel: +353 1 485 3361
Tel: +353 86 2566 406

Email: info@paulbyrnearchitects.ie
Web: www.paulbyrnearchitects.ie

JOB TITLE: Kilcock West SHD 2

CLIENT: Teresa Monaghan

DRAWINGS: Typical Side by Side Bin Store - Terraced houses

Scale:	Drawn:
1:50 @ A3	MR
Date: August 2022	Checked: PB
Purpose of Issue: SHD Planning	

Job No:	Drawing No:	Revision:
22240	P607	A