1. ALL DIMENSIONS ARE IN MILLIMETRES (mm) UNLESS NOTED OTHERWISE.
2. RODDING EYE VERTICAL PIPE SHALL BE COVERED WITH APPROVED HEAVY DUTY METAL COVERS TO IS 261 AND BS 5834. COVER AND FRAME SHALL BE SUITABLE FOR ROAD AND TRAFFIC CONDITIONS AND IS SUBJECT TO REVIEW BY IRISH WATER.
3. ALL CHAMBERS TO BE CHECKED FOR UPLIFT BY THE DEVELOPER BASED ON GROUND CONDITIONS WITHIN THE SITE. SHOULD ANTI FLOATATION MEASURES BE REQUIRED THEY SHALL BE SUBJECT TO REVIEW BY IRISH WATER.
4. ALL CONCRETE TO BE IN ACCORDANCE WITH IS EN 206.
5. MANHOLE DETAILS TO BE IN ACCORDANCE WITH STD-WW-09, 10, 10A AND 11
6. ALL BACKDROPS SHOULD TERMINATE AT THEIR LOWER END WITH A BEND INTO THE MAIN CHANNEL TO ENSURE THE DISCHARGE IS 45° OR LESS ON PLAN.
7. 200mm ALL AROUND x 100mm DEEP, C20/25 CONCRETE PLINTH COMPLETE WITH BULL NOSE FINISH AND TO BE PROVIDED COMPLETE WITH MILD STEEL REINFORCEMENT LINK AROUND COVERS IN GREEN AREAS.

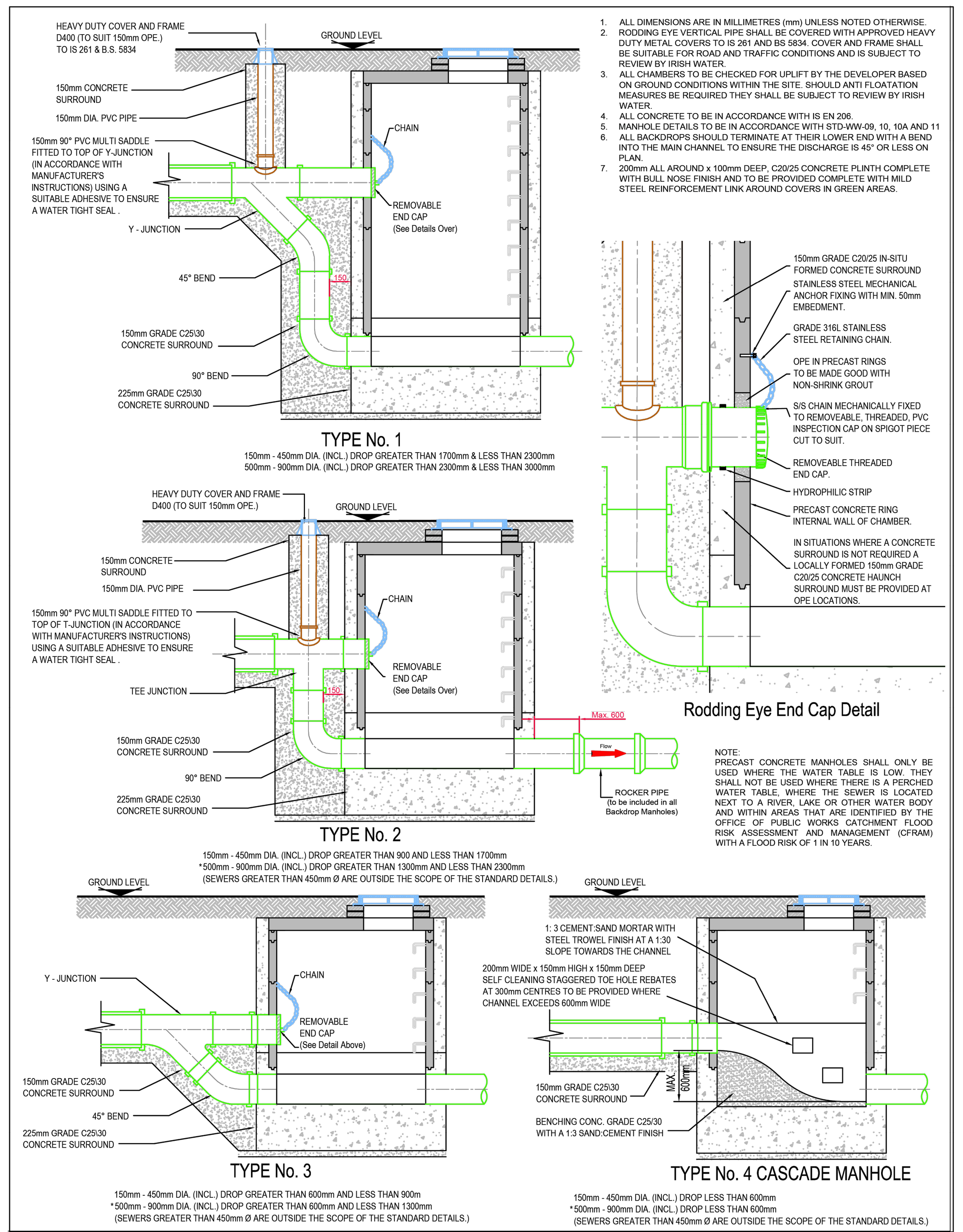

NOTE:
PRECAST CONCRETE MANHOLES SHALL ONLY BE USED WHERE THE WATER TABLE IS LOW. THEY SHALL NOT BE USED WHERE THERE IS A PERCHED WATER TABLE, WHERE THE SEWER IS LOCATED NEXT TO A RIVER, LAKE OR OTHER WATER BODY AND WITHIN AREAS THAT ARE IDENTIFIED BY THE OFFICE OF PUBLIC WORKS CATCHMENT FLOOD RISK ASSESSMENT AND MANAGEMENT (CFRAM) WITH A FLOOD RISK OF 1 IN 10 YEARS.

REFER TO INDEX SHEET FOR NOTES REGARDING DESIGN RESPONSIBILITY & RISK ASSESSMENT

UISCE ÉIREANN : IRISH WATER — STANDARD DETAILS - WASTEWATER — SCALE: NOT TO SCALE — DATE: SEPT. 2015

No.	Date	Drn	Chk	Description	App
3	07/20	RH	TOC	Cascade manholeType 4 added, end cap detail added, notes updated, title updated	MOD
2	11/17	JMC	TOC	Updated notes	MOD
1	08/16	JMC	TOC	Added steps	MOD
0	09/15	JMC	TOC	Initial Issue	SL

TITLE: BACKDROP AND CASCADE MANHOLES — DRAWING No.: STD-WW-12 — REV: 3

1. ALL DIMENSIONS ARE IN MILLIMETRES (mm) UNLESS NOTED OTHERWISE.
2. AN INSPECTION CHAMBER SHOULD BE LOCATED AT OR WITHIN 1m OF THE PROPERTY BOUNDARY AT THE UPSTREAM END OF EACH SERVICE CONNECTION ON THE PRIVATE SIDE OF THE CURTILAGE, IF PRACTICABLE, CONSULT WITH IRISH WATER ON ALTERNATIVE LOCATIONS.
3. SERVICE CONNECTION FROM PUBLIC SEWER TO PROPERTY BOUNDARY IS A PUBLIC ASSET. PIPE UPSTREAM OF THE PROPERTY BOUNDARY IS A PRIVATE DRAIN AND SHOULD BE CONSTRUCTED IN ACCORDANCE WITH THE BUILDING.
4. ACCESS POINTS SHOULD BE LOCATED SO THAT THEY ARE ACCESSIBLE AND APPARENT TO THE MAINTAINER AT ALL TIMES FOR USE. THEY SHOULD AVOID REAR GARDENS OR ENCLOSED LOCATIONS AND SHOULD NEVER BE OVERLAIN WITH SURFACE DRESSING, TOPSOIL, ETC.
5. COVERS AND FRAMES SHALL BE SUITABLE FOR ROAD AND TRAFFIC CONDITIONS SUBJECT TO REVIEW BY IRISH WATER.
6. 200mm ALL AROUND, 100mm DEEP CONCRETE PLINTH AROUND COVERS IN GREEN AREAS.
7. PROPRIETARY PREFABRICATED CHAMBER UNITS MAY ALSO BE USED, SUBJECT TO REVIEW BY IRISH WATER - SEE DETAIL BELOW.
8. CHAMBERS SHALL BE SURROUNDED BY A MINIMUM OF 150mm COMPACTED CLAUSE 804 OR CLAUSE 808 MATERIAL AS PER STD-WW-07.
9. MAXIMUM DEPTH FROM COVER LEVEL TO INVERT OF PIPE = 1.2m. INTERNAL DIMENSIONS GREATER THAN 600 x 600mm OR 600mm Ø REQUIRED WHERE DEPTH EXCEEDS 1.2m - CONSULT WITH IRISH WATER.
10. SMALLER INSPECTION CHAMBERS WITH INTERNAL DIMENSIONS OF 450mm Ø OR 450 X 450mm MAY BE PERMITTED SUBJECT TO APPROVAL BY IRISH WATER WHERE CONFINED PHYSICAL CONDITIONS EXIST.
11. PREFABRICATED UNITS SHOULD HAVE WATER TIGHT JOINTS AND SHOULD BE INTERLOCKING TO PREVENT LATERAL MOVEMENT OF INDIVIDUAL SECTIONS OF THE UNIT

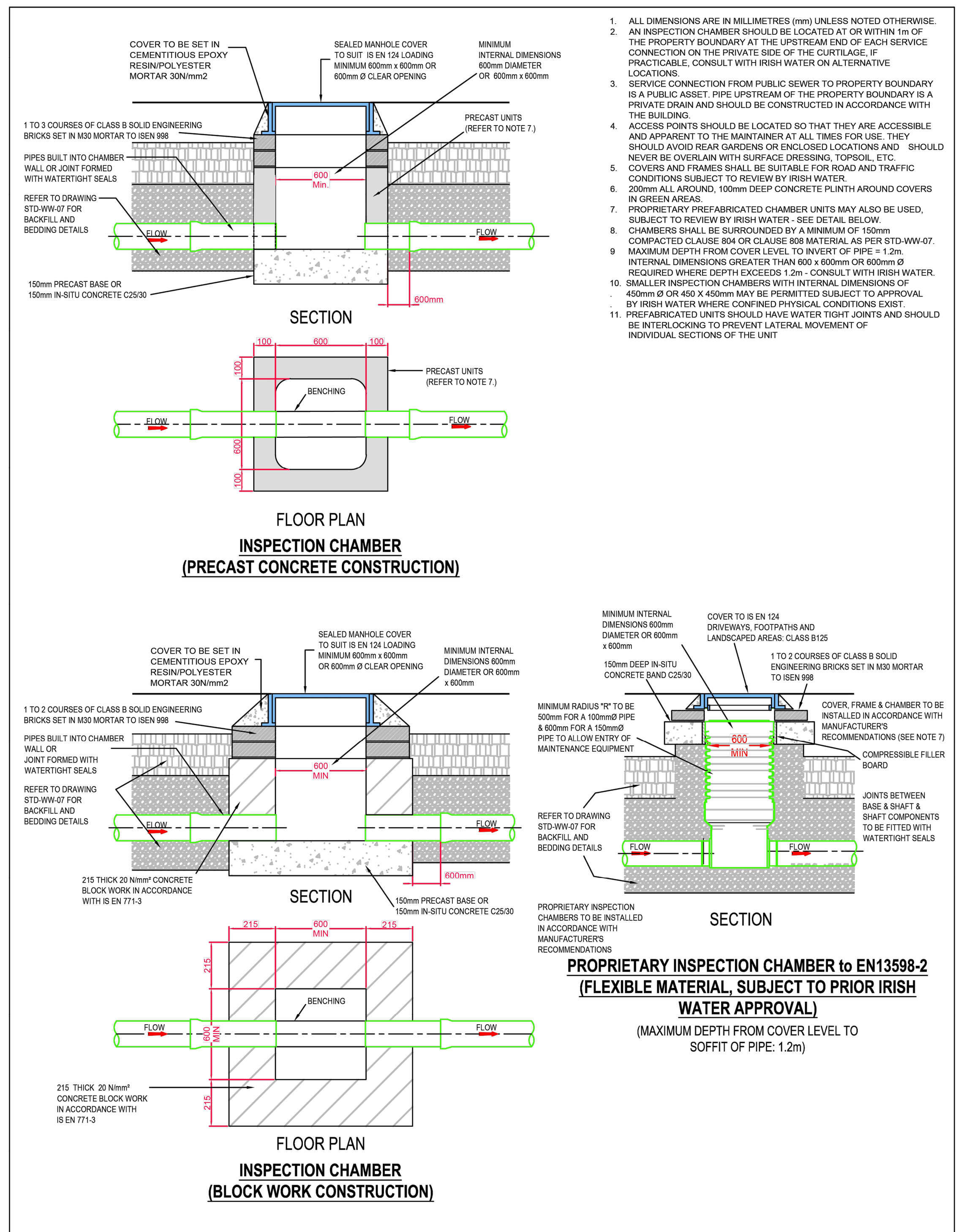

REFER TO INDEX SHEET FOR NOTES REGARDING DESIGN RESPONSIBILITY & RISK ASSESSMENT

UISCE ÉIREANN : IRISH WATER — STANDARD DETAILS - WASTEWATER — SCALE: NOT TO SCALE — DATE: SEPT. 2015

No.	Date	Drn	Chk	Description	App
3	07/20	RH	TOC	Added Flexible Material I.C. Detail, Updated Notes	MOD
2	11/17	JMC	TOC	Updated notes	MOD
1	08/16	JMC	TOC	Added Cl. 808 to note 8	MOD
0	09/15	JMC	TOC	Initial Issue	SL

TITLE: PRIVATE SIDE INSPECTION CHAMBER — DRAWING No.: STD-WW-13 — REV: 3

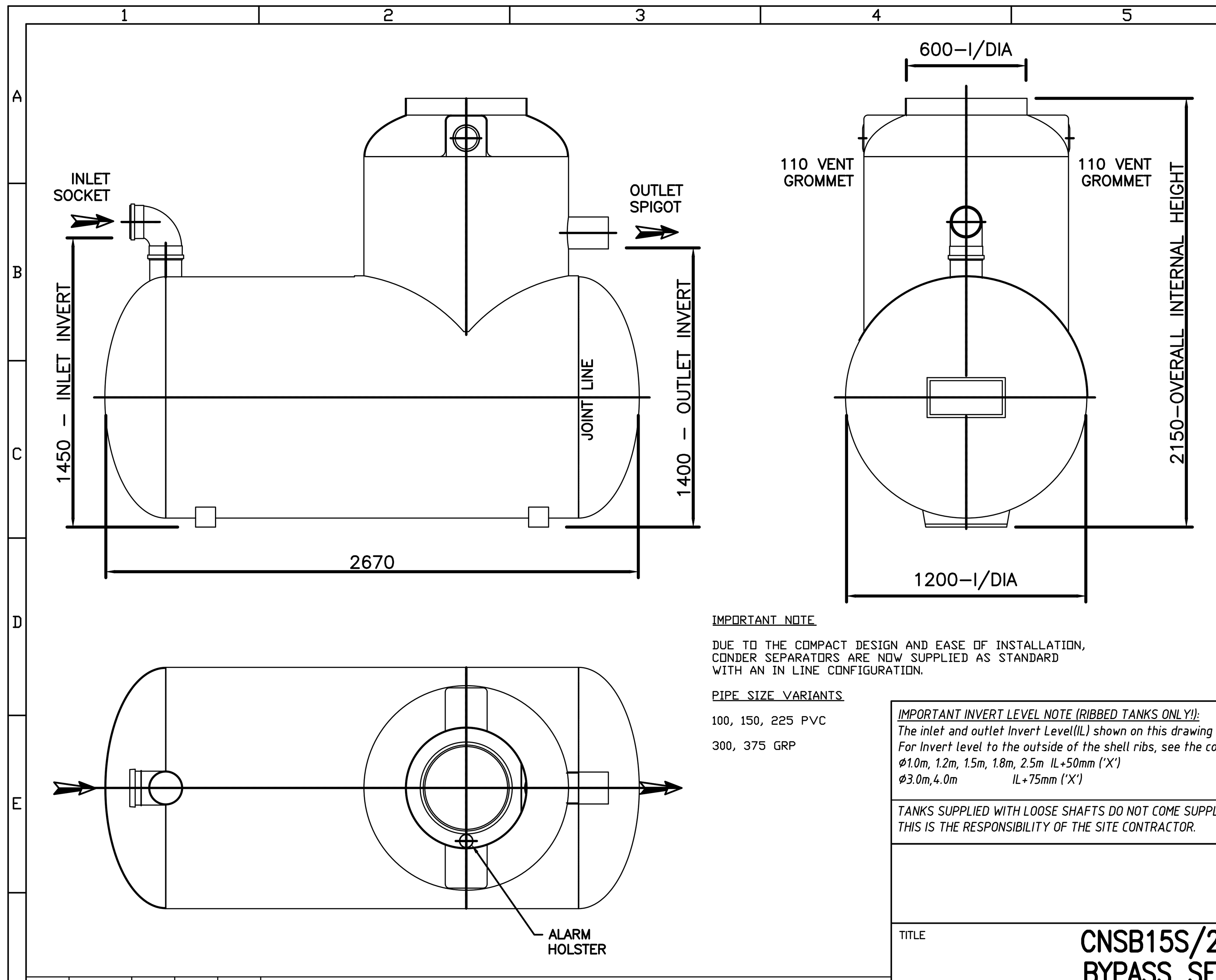

NOTES:
1. PRODUCT INFORMATION
The Conder range of light liquid separators is produced from high grade GRP. Inlets are provided as sockets and outlets as spigots, Connections may be made by steel-banded flexible couplings, nitrile seal joints, rope-seal and mortar or any other appropriate jointing method.
Ventilation specifications should be in accordance with Local Authority requirements. Vent pipework from multiple chambers must never be manifolded below ground level.

2. PERFORMANCE CHARACTERISTICS
Separators are based on the requirements stated in European Standard EN858-1 and Environment Agency guideline PPG3, in particular:-
a. The nominal size has been established from performance tests where the residual oil at the outlet is less than 5mg/l for class 1 separators and less than 100mg/l for class 2 separators.

3. MAINTENANCE AND USE
It is important to recognise that light liquid separators require regular maintenance. The period between maintenance operations can vary depending on the location and use of the separator, therefore routine inspections shall be undertaken at least every six months and a log maintained of inspection date, depth of oil, depth of silt and any cleaning that is undertaken.
A Conder Alarm should be fitted to every separator to give automatic warning that the light liquid capacity has been reached.
Access to the separator should be kept clear and not used for storage.

4. PRODUCT DEVELOPMENT
In line with our policy of constant improvement and development, we reserve the right to change specification without prior notice.

IMPORTANT NOTE

DUE TO THE COMPACT DESIGN AND EASE OF INSTALLATION, CONDER SEPARATORS ARE NOW SUPPLIED AS STANDARD WITH AN IN LINE CONFIGURATION.

PIPE SIZE VARIANTS

100, 150, 225 PVC

300, 375 GRP

IMPORTANT INVERT LEVEL NOTE (RIBBED TANKS ONLY!):
The inlet and outlet Invert Level(IL) shown on this drawing is to internals of the shell unless otherwise stated.
For Invert level to the outside of the shell ribs, see the conversion below:
Ø1.0m, 1.2m, 1.5m, 1.8m, 2.5m IL+50mm ('X')
Ø3.0m,4.0m IL+75mm ('X')
INNER TANK SHELL — DETAIL 'Y'

TANKS SUPPLIED WITH LOOSE SHAFTS DO NOT COME SUPPLIED WITH A FIXING KIT.
THIS IS THE RESPONSIBILITY OF THE SITE CONTRACTOR.

1ST ANGLE PROJECTION

TITLE: CNSB15S/21/SALES BYPASS SEPARATOR

REV.	DATE	BY	CHKD.	APPD.	DESCRIPTION
7	11.04.13	DG	KB	RP	PIPE SIZE VARIANTS AMENDED

A3 — DO NOT SCALE IF IN DOUBT ASK ALL DIMENSIONS IN MM

GENERAL TOLERANCES (unless noted otherwise)				
GRP FABRICATED MACHINED	LINEAR	± 5mm ± 2mm ± 0.5mm	ANGLE	±0.5° ±0.2° ±0.1°

THIS DRAWING IS THE PROPERTY OF PREMIER TECH AQUA Ltd. AND IS NOT TO BE COPIED IN PART OR WHOLE WITHOUT WRITTEN PERMISSION

DRAWN BY	CHKD.	APPD.	SCALE	DRAWING No.	REVISION
RU	PB	RP	NTS	CNSB15S/21 SALES	7
DATE 23.03.09	DATE 23.03.09	DATE 23.03.09			

1. ALL DIMENSIONS IN MILLIMETRES (mm) UNLESS NOTED OTHERWISE.
2. VALVE SURFACE BOX TO BE IN ACCORDANCE WITH IS 261 OR BS 5834. SCOUR CHAMBERS SHALL BE COVERED WITH APPROVED HEAVY DUTY METAL COVERS TO IS EN 124 RATING D400. COVERS AND FRAMES SHALL BE SUITABLE FOR ROAD AND TRAFFIC CONDITIONS SUBJECT TO REVIEW BY IRISH WATER.
3. SLUICE VALVES SHALL BE DOUBLE FLANGED WITH DUCTILE IRON RESILIENT SEAL GATE VALVES, SUITABLE FOR USE IN RISING MAINS. THEY SHALL COMPLY WITH THE REQUIREMENTS OF IS EN 1074 AND THEY SHALL HAVE THE APPROPRIATE CE MARKING.
4. SCOUR CHAMBER TO BE IN ACCORDANCE WITH BS EN 1992-3.
5. STRUCTURAL DESIGN AND REINFORCEMENT DETAILS TO BE PROVIDED BY THE DEVELOPER AND SUBMITTED TO IRISH WATER FOR REVIEW. ROOF SLABS SHALL BE DESIGNED TO CARRY ALL LIVE LOADS & DEAD LOADS, & CONSIST OF A REINFORCED CONCRETE SLAB OF IN-SITU CONCRETE, GRADE C30/37, WITH A MINIMUM THICKNESS OF 225mm. ALTERNATIVELY, PRE-CAST CONCRETE ROOFS MAY BE USED, SUBJECT TO IRISH WATER REVIEW, & COMPLIANCE WITH BS 5911 Part 4.
6. THRUST BLOCKS (NOT SHOWN ON DRAWING), TO BE PROVIDED AS PER STANDARD DRAWING STD-WW-14 AT ALL TEES, BENDS, TAPERS, DEAD ENDS AND PIPES AT STEEP SLOPES.
7. 200mm ALL AROUND x 100mm DEEP, C20/25 CONCRETE PLINTH COMPLETE WITH BULL NOSE FINISH AND TO BE PROVIDED COMPLETE WITH MILD STEEL REINFORCEMENT LINK AROUND COVERS IN GREEN AREAS.
8. ANTI CORROSION TAPE TO BE PROVIDED AROUND BURIED FLANGES.
9. ALL CONCRETE TO BE IN ACCORDANCE WITH IS EN 206.
10. ALL DUCTILE IRON PIPEWORK AND FITTINGS TO BE IN ACCORDANCE WITH IS EN 598.
11. ALL CHAMBERS TO BE CHECKED FOR UPLIFT BY THE DEVELOPER BASED ON GROUND CONDITIONS WITHIN THE SITE. SHOULD ANTI FLOATATION MEASURES BE REQUIRED THEY SHALL BE SUBJECT TO REVIEW BY IRISH WATER.
12. ANY SPECIAL ROAD REINSTATEMENT AROUND COVER & FRAME SHALL BE TO ROAD AUTHORITY'S REQUIREMENTS.
13. NEW ROAD CONSTRUCTION & SURFACE FINISH TO BE TO ROAD AUTHORITY REQUIREMENTS.
14. EXISTING ROAD REINSTATEMENT TO COMPLY WITH CURRENT VERSION OF "GUIDELINES FOR MANAGING OPENINGS IN PUBLIC ROADS" BY THE DEPT. OF TRANSPORT, TOURISM & SPORT, OR TRANSPORT INFRASTRUCTURE IRELAND REQUIREMENTS.
15. SCOUR VALVE REQUIRED ONLY AT LOW POINTS FOR UNDULATING RISING MAINS.

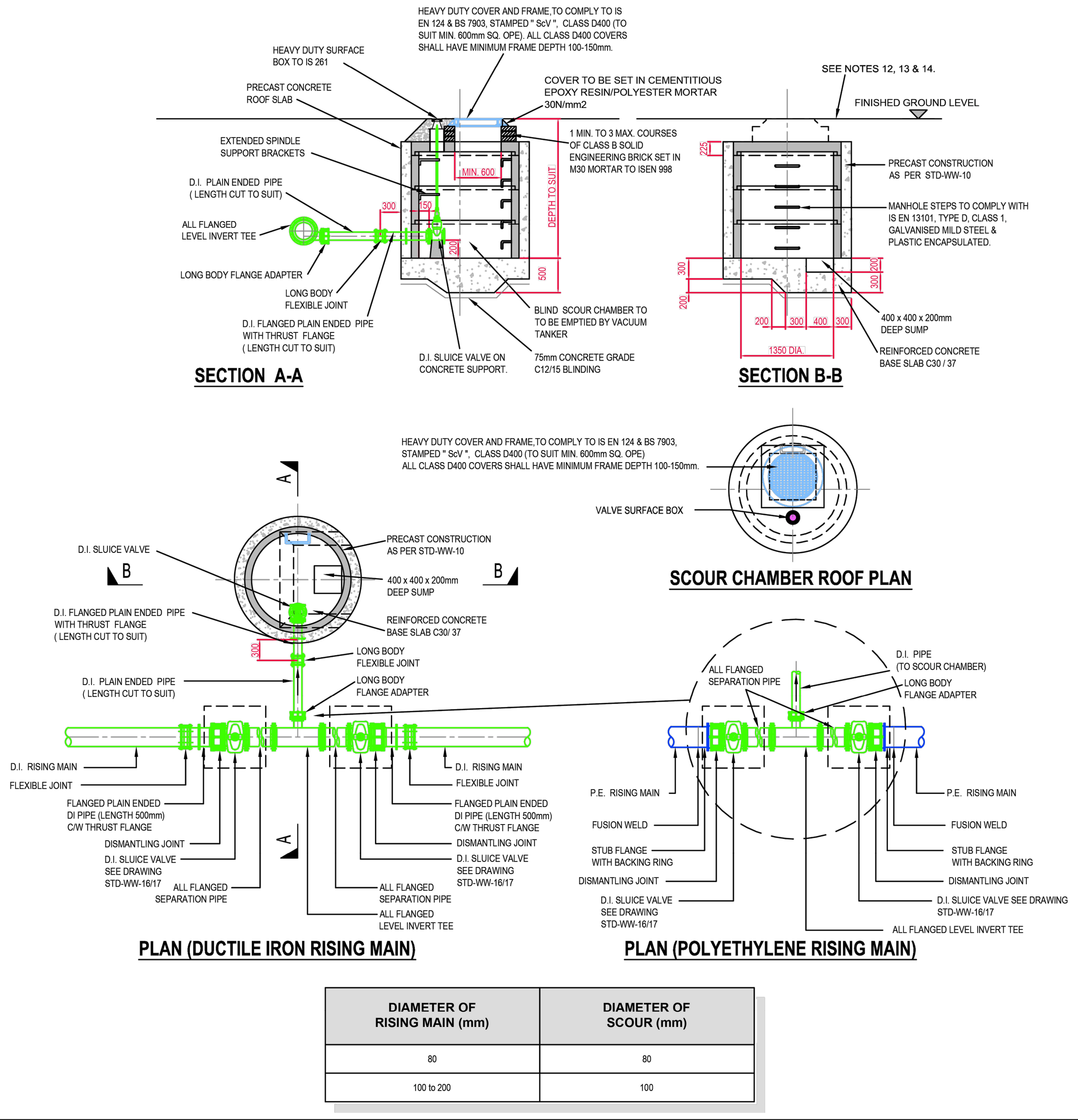

DIAMETER OF RISING MAIN (mm)	DIAMETER OF SCOUR (mm)
80	80
100 to 200	100

REFER TO INDEX SHEET FOR NOTES REGARDING DESIGN RESPONSIBILITY & RISK ASSESSMENT

UISCE ÉIREANN : IRISH WATER — STANDARD DETAILS - WASTEWATER — SCALE: NOT TO SCALE — DATE: SEPT. 2015

No.	Date	Drn	Chk	Description	App
3	07/20	RH	TOC	Manhole cover and brick coursing notes revised & added notes	MOD
2	11/17	JMC	TOC	Revised & added notes	MOD
1	08/16	JMC	TOC	Added steps, revised note 2, dims, cover & ope notes.	MOD
0	09/15	JMC	TOC	Initial Issue	SL

TITLE: SCOUR VALVE CHAMBER FOUL RISING MAIN (≤ 200mm DIA.) — DRAWING No.: STD-WW-15 — REV: 3

1. ALL DIMENSIONS IN MILLIMETRES (mm) UNLESS NOTED OTHERWISE.
2. SLUICE VALVE CHAMBERS SHALL BE COVERED WITH APPROVED HEAVY DUTY METAL COVERS TO IS 261 AND BS 5834. COVER AND FRAME SHALL BE SUITABLE FOR ROAD AND TRAFFIC CONDITIONS AND IS SUBJECT TO REVIEW BY IRISH WATER.
3. SLUICE VALVES SHALL BE DOUBLE FLANGED WITH DUCTILE IRON RESILIENT SEAL GATE VALVES, SUITABLE FOR USE IN RISING MAINS. THEY SHALL COMPLY WITH THE REQUIREMENTS OF IS EN 1074 AND THEY SHALL HAVE THE APPROPRIATE CE MARKINGS.
4. ALL SLUICE VALVES SHALL BE CLOCKWISE CLOSING.
5. VALVE CHAMBER TO BE CONSTRUCTED OF PRECAST CONCRETE UNITS OR HIGH DENSITY BLOCKWORK. ALTERNATIVELY PROPRIETARY PREFABRICATED CHAMBER UNITS MAY ALSO BE USED, SUBJECT TO REVIEW BY IRISH WATER. ROOF SLABS SHALL BE DESIGNED TO CARRY ALL LIVE LOADS & DEAD LOADS, & CONSIST OF A REINFORCED CONCRETE SLAB OF IN-SITU CONCRETE, GRADE C30/37, WITH A MINIMUM THICKNESS OF 150mm. ALTERNATIVELY, PRE-CAST CONCRETE ROOFS MAY BE USED, SUBJECT TO IRISH WATER REVIEW, & COMPLIANCE WITH BS 5911, Part 4.
6. CONCRETE CHAMBERS SHALL BE SURROUNDED BY A MINIMUM OF 150mm COMPACTED CLAUSE 808 MATERIAL AS PER STD-WW-07.
7. ALL CONCRETE TO BE IN ACCORDANCE WITH IS EN 206.
8. DUCTILE IRON PIPES AND FITTINGS TO BE IN ACCORDANCE WITH IS EN 598.
9. PE PIPES TO BE IN ACCORDANCE WITH IS EN 12201 : 2011.
10. 200mm ALL AROUND x 100mm DEEP, C20/25 CONCRETE PLINTH COMPLETE WITH BULL NOSE FINISH AND TO BE PROVIDED COMPLETE WITH MILD STEEL REINFORCEMENT LINK AROUND COVERS IN GREEN AREAS.
11. THRUST BLOCKS (NOT SHOWN ON DRAWING), TO BE PROVIDED AS PER STANDARD DRAWING STD-WW-14 AT ALL TEES, BENDS, TAPERS, DEAD ENDS AND PIPES AT STEEP SLOPES.
12. ANTI-CORROSION TAPE TO BE PROVIDED AROUND BURIED FLANGES.
13. ALL CHAMBERS TO BE CHECKED FOR UPLIFT BY THE DEVELOPER BASED ON GROUND CONDITIONS WITHIN THE SITE. SHOULD ANTI FLOATATION MEASURES BE REQUIRED THEY SHALL BE SUBJECT TO REVIEW BY IRISH WATER.
14. ANY SPECIAL ROAD REINSTATEMENT AROUND COVER & FRAME SHALL BE TO ROAD AUTHORITY'S REQUIREMENTS.
15. NEW ROAD CONSTRUCTION & SURFACE FINISH TO BE TO ROAD AUTHORITY REQUIREMENTS.
16. EXISTING ROAD REINSTATEMENT TO COMPLY WITH CURRENT VERSION OF "GUIDELINES FOR MANAGING OPENINGS IN PUBLIC ROADS" BY THE DEPT. OF TRANSPORT, TOURISM & SPORT, OR TRANSPORT INFRASTRUCTURE IRELAND REQUIREMENTS.

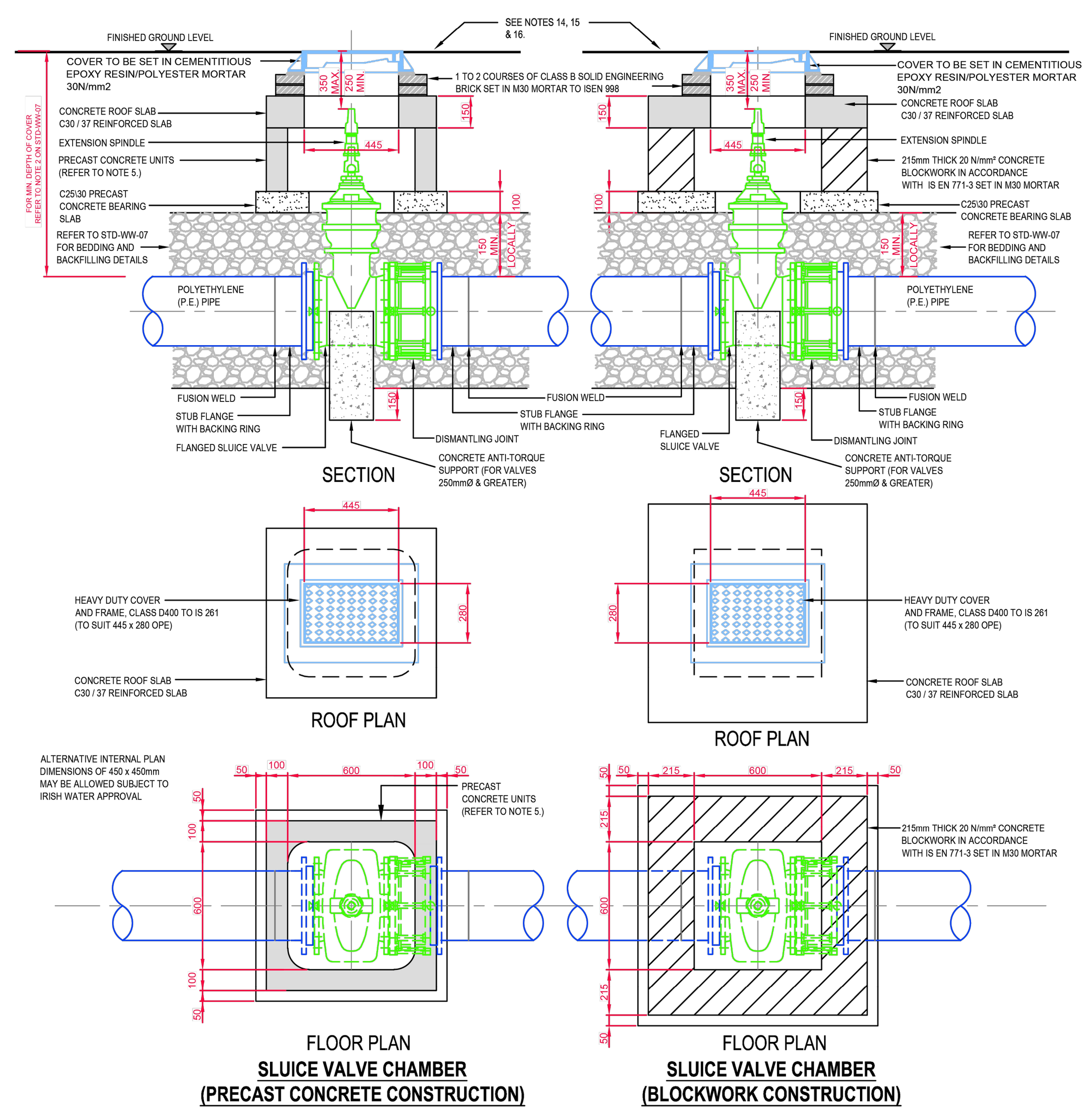

REFER TO INDEX SHEET FOR NOTES REGARDING DESIGN RESPONSIBILITY & RISK ASSESSMENT

UISCE ÉIREANN : IRISH WATER — STANDARD DETAILS - WASTEWATER — SCALE: NOT TO SCALE — DATE: SEPT. 2015

No.	Date	Drn	Chk	Description	App
3	07/20	RH	TOC	Updated anti-torque support note, brickwork bedding mortar spec and added plan dimensions note	MOD
2	11/17	JMC	TOC	Revised & Added Notes	MOD
1	08/16	JMC	TOC	Revised note 6 (Cl. 808)	MOD
0	09/15	JMC	TOC	Initial Issue	SL

TITLE: SLUICE VALVE DETAILS FOR RISING MAINS POLYETHYLENE (P.E.) PIPE (≤ 200mm DIA.) (Sheet 2 of 2) — DRAWING No.: STD-WW-17 — REV: 3

1. ALL DIMENSIONS ARE IN MILLIMETRES (mm) UNLESS NOTED OTHERWISE.
2. VENTILATION STACK TO BE PROVIDED IN ODOUR SENSITIVE AREAS AND ODOUR TREATMENT UNIT MAY BE REQUIRED DEPENDING ON LOCATION.
3. ISOLATING VALVE TO BE IN ACCORDANCE WITH IS EN 1074-2.
4. STRUCTURAL DESIGN AND REINFORCEMENT DETAILS TO BE PROVIDED BY THE DEVELOPER AND SUBMITTED TO IRISH WATER FOR REVIEW. ROOF SLABS SHALL BE DESIGNED TO CARRY ALL LIVE LOADS & DEAD LOADS, & CONSIST OF A REINFORCED CONCRETE SLAB OF IN-SITU CONCRETE, GRADE C30/37, WITH A MINIMUM THICKNESS OF 225mm. ALTERNATIVELY, PRE-CAST CONCRETE ROOFS MAY BE USED, SUBJECT TO IRISH WATER REVIEW, & COMPLIANCE WITH IS 420 & ISEN 1917.
5. DOUBLE AIR VALVE CHAMBER SHALL BE COVERED WITH APPROVED HEAVY DUTY VENTILATED METAL COVER TO IS EN 124 RATING D400. COVERS AND FRAMES SHALL BE SUITABLE FOR ROAD AND TRAFFIC CONDITIONS SUBJECT TO REVIEW BY IRISH WATER.
6. 200mm ALL AROUND x 100mm DEEP, C20/25 CONCRETE PLINTH COMPLETE WITH BULL NOSE FINISH AND TO BE PROVIDED COMPLETE WITH MILD STEEL REINFORCEMENT LINK AROUND COVERS IN GREEN AREAS.
7. THRUST BLOCKS (NOT SHOWN ON DRAWING), TO BE PROVIDED AS PER STANDARD DRAWING STD-WW-14 AT ALL TEES, BENDS, TAPERS, DEAD ENDS AND PIPES AT STEEP SLOPES.
8. PRE-CAST UNITS MAY BE USED SUBJECT TO REVIEW BY IRISH WATER.
9. ANTI CORROSION TAPE TO BE PROVIDED AROUND ALL BURIED FLANGES.
10. ALL CONCRETE TO BE IN ACCORDANCE WITH IS EN 206.
11. ALL DUCTILE IRON PIPE WORK AND FITTINGS TO BE IN ACCORDANCE WITH IS EN 598.
12. ALL PE PIPES AND FITTINGS TO BE IN ACCORDANCE WITH IS EN 12201: 2011.
13. ALL CHAMBERS TO BE CHECKED FOR UPLIFT BY THE DEVELOPER BASED ON GROUND CONDITIONS WITHIN THE SITE. SHOULD ANTI FLOATATION MEASURES BE REQUIRED THEY SHALL BE SUBJECT TO REVIEW BY IRISH WATER.
14. ANY SPECIAL ROAD REINSTATEMENT AROUND COVER & FRAME SHALL BE TO ROAD AUTHORITY'S REQUIREMENTS.
15. NEW ROAD CONSTRUCTION & SURFACE FINISH TO BE TO ROAD AUTHORITY REQUIREMENTS.
16. EXISTING ROAD REINSTATEMENT TO COMPLY WITH CURRENT VERSION OF "GUIDELINES FOR MANAGING OPENINGS IN PUBLIC ROADS" BY THE DEPT. OF TRANSPORT, TOURISM & SPORT, OR TRANSPORT INFRASTRUCTURE IRELAND REQUIREMENTS.

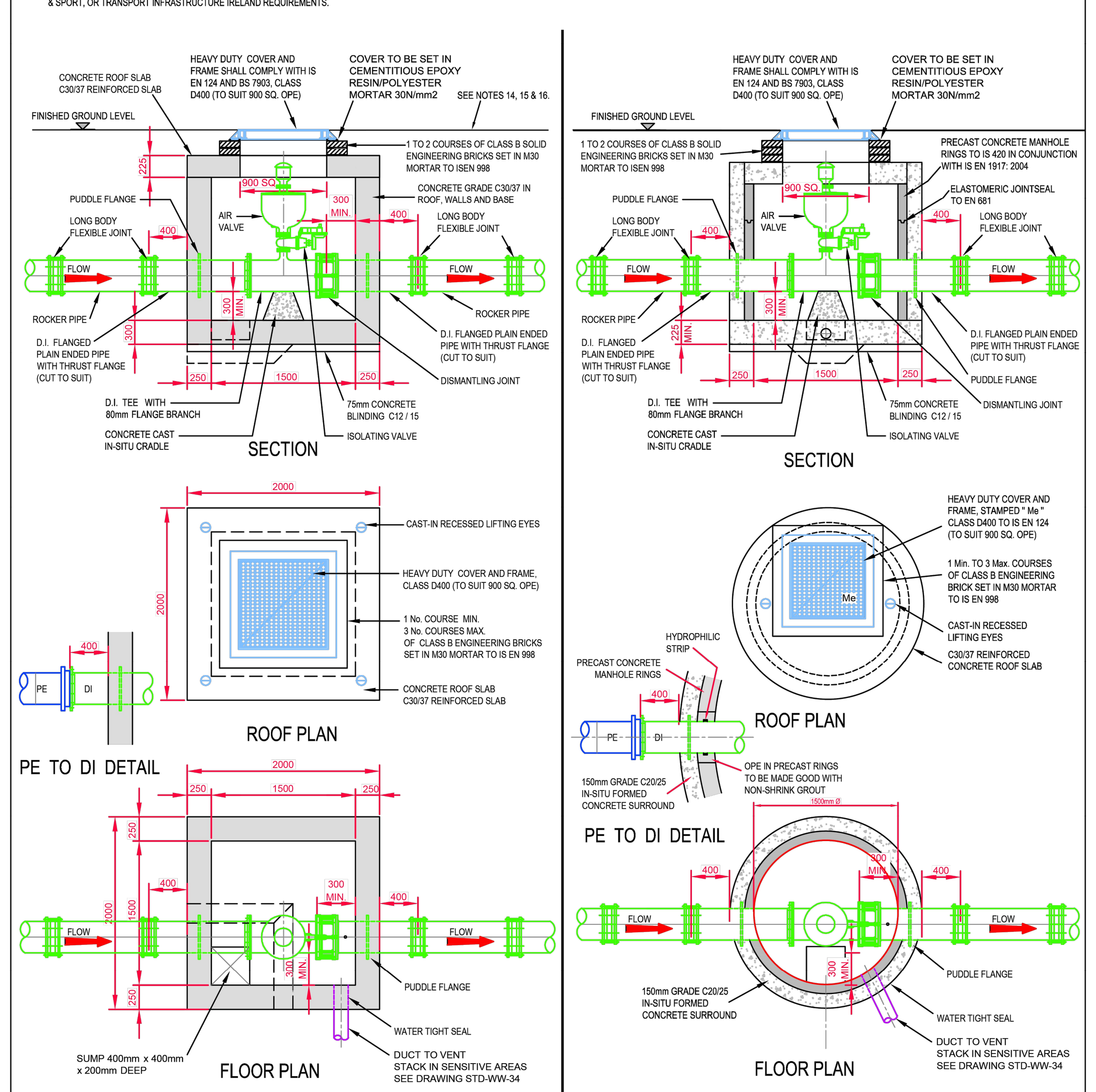

REFER TO INDEX SHEET FOR NOTES REGARDING DESIGN RESPONSIBILITY & RISK ASSESSMENT

UISCE ÉIREANN : IRISH WATER — STANDARD DETAILS - WASTEWATER — SCALE: NOT TO SCALE — DATE: SEPT. 2015

No.	Date	Drn	Chk	Description	App
3	07/20	RH	TOC	Updated notes, revised brickwork mortar bedding notes, precast option added.	MOD
2	11/17	JMC	TOC	Revised & added notes	MOD
1	08/16	JMC	TOC	Revised note 5 & cover notes	MOD
0	09/15	JMC	TOC	Initial Issue	SL

TITLE: AIR VALVE CHAMBER (FOUL RISING MAIN ≤ 200mm DIA.) — DRAWING No.: STD-WW-18 — REV: 3

Standard Irish Water Detail References:
STD-WW-01 Waste water service connection responsibility
STD-WW-03 Drain & Service connection pipework
STD-WW-04 Typical Sewer/ Service pipe connection
STD-WW-05 Typical Service layout indicating seperation distances
STD-WW-05A Wastewater - Vertical separation distances
STD-WW-06 Existing Planting
STD-WW-06A Restrictions on new planting adjacent to sewers
STD-WW-07 Trench Backfill & Bedding
STD-WW-08 Concrete bed, Haunch & surround to wastewater pipes
STD-WW-10 Pre-cast concrete manhole
STD-WW-12 Backdrop manholes
STD-WW-13 Private side inspection chamber

Refer to dwg no. 7114-0020 for plan layout

Joyce House
Barrack Square
Ballincollig
Cork
P31 KP84
021 4871781
info@dosa.ie
www.dosa.ie

© THIS DRAWING IS COPYRIGHT, NO PART OF THIS DOCUMENT MAY BE RE-PRODUCED OR TRANSMITTED IN ANY FORM OR STORED IN ANY RETRIEVAL SYSTEM OF ANY NATURE WITHOUT THE WRITTEN PERMISSION OF THE ENGINEER AS COPYRIGHT HOLDER EXCEPT AS AGREED FOR USE ON THE PROJECT FOR WHICH THE DOCUMENT WAS ORIGINALLY ISSUED.

REV.	DRAWN	CHKD	APPRVD	DATE	DETAILS
B	G.S.	B.O'S	B.O'S	10.01.25	Issued for Planning
A	S.B.	B.O'S.	B.O'S.	04.10.24	Issued for information

CLIENT: Barrys Field Ltd.

PROJECT: Barry's Field, Douglas, Cork

DRAWING TITLE: Proposed Wastewater Details (2 of 2)

SHEET	SCALE	PROJECT NO.	DRAWING NO.	STATUS/ISSUE
A1	N.T.S.	7114	0026	B