

Pink area

The protective fence is to be offset when the time comes for the construction of paths and placement of surfaces

BS5837 Tree Protection Fencing Diagram

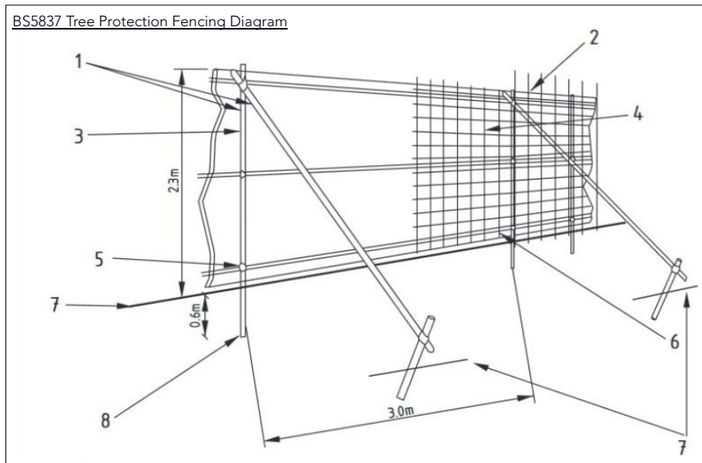

1 Standard scaffold poles
2 Uprights to be driven into the ground
3 Panels secured to uprights with wire ties and where necessary standard scaffold clamps
4 Weldmesh wired to the uprights and horizontals
5 Standard clamps
6 Wire twisted and secured on inside face of fencing to avoid easy dismantling
7 Ground level
8 Approx. 0.6m driven into the ground

Protective Fencing

- **Site Boundaries and Fencing Requirements**
  - Existing road boundaries negate the need for external fencing; retained trees must be safeguarded per BS 5837:2012.
- **Primary Protection Method**
  - Robust fencing (2.0m-high welded mesh barriers supported by scaffold framework) prevents construction damage.
- **Fencing Placement**
  - Position fencing at the outer edge of the Root Protection Area (RPA) or crown spread, whichever is greater.
  - Follow BS 5837:2012 guidelines (clauses 7.1 and 7.2) to avoid enforcement actions or remedial measures.
- **Fencing Specifications**
  - Use scaffold poles to support chain-link or weld-mesh panels.
  - Avoid plastic or snow fencing unless properly secured with heavy wire on sturdy posts.
  - Height: 5-8 feet.
  - Posts: 2-inch galvanized iron, driven 2 feet into the ground, spaced no more than 10 feet apart.
  - Use alternative anchoring methods if structural roots or utilities prevent post driving.
  - Mark barriers with multilingual signs indicating protected areas and restricted access.

Modifications to Protective Fencing

- Construction Exclusion Zone (CEZ) within fencing is sacrosanct; changes require Project Arborist approval.
- Report damage to tree protection measures immediately to avoid enforcement actions.

Protective Fencing Inspection

- **Initial Inspection:** Project Arborist to inspect fencing after installation and before construction begins.
- **Ongoing Oversight:** Construction Manager ensures fencing remains intact; regular inspections with Arborist.
- **Repairs:** Promptly address any required repairs.

By implementing these measures, tree health and stability will be maintained throughout the project.

BS5837:2012 - Tree Categories

- Category A Tree — High quality and value, At least 40 years life-expectancy
- Category B Tree — Moderate quality and value, At least 20 years life-expectancy
- Category C Tree — Moderate quality and value, At least 10 years life-expectancy
- Category U Tree — Poor quality and value, Less than 10 years life-expectancy

Arboricultural Strategy

- G1/H1 — Tree group/hedge to be retained
- Protective fencing

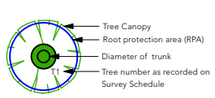

I. The Tree Survey, Assessment and Plans were carried out by the Heritage Tree Care Ltd.
II. Tree locations are based on available aerial imagery, topographical surveys and on-site observations.
III. Plans should be read in conjunctions with the Arboricultural Impact Assessment, BS 5837 Tree Survey and Tree Clearance Plan provided by Heritage Tree Care Ltd.
IV. The original of this drawing was produced in colour. A monochrome copy should not be relied upon.

Disclaimer
I. This drawing is confidential and the copyright in it is owned by © Heritage Tree Care Ltd. This drawing must not be either loaned, copied or otherwise reproduced in whole or in part or used for any purpose without the prior permission of Heritage Tree Care Ltd.
II. This drawing is to be used for the design element identified in the title box. Other information shown is to be considered indicative only. The drawing is to be read in conjunction with all other relevant design drawings.
III. O.S. data used for plans are © Ordnance Survey Ireland, Government of Ireland. All co-ordinates are in Irish Transverse Mercator Grid (ITM) as defined by Obi active local GPS station.
IV. Information concerning the position of apparatus shown on this drawing is based on drawing supplied by the land owners and/or contractor/s. Whilst every care has been taken in the preparation of this drawing, positions should be taken as approximate and are intended for general guidance only. No representation is made by Heritage Tree Care Ltd. as to the accuracy, completeness, sufficiency or otherwise of this drawing and the position of the apparatus. The information contained herein does not purport to be comprehensive or final as the apparatus is subject to being altered and/or superseded. Recipients should not rely on this information. Any liabilities are hereby expressly disclaimed.
V. The information contained herein has been provided by Heritage Tree Care Ltd. and does not purport to be comprehensive or final. Recipients should not rely on the information. Heritage Tree Care ltd. make no representation or warranty as to, or accept any liability or responsibility in relation to, the adequacy, accuracy, reasonableness or completeness of the information provided a part o this document or any mater on which the information is based (including, but not limited to, loss or damage arising as a result of reliance by recipients on the informations for any part of it). Any liability are hereby expressly disclaimed.

Site	Client		
Barry's Field	Barry's Field Ltd.		
Drawing Title	**Status**	**Scale**	**Date**
Tree Protection Plan	Draft	1:500	10/01/2025

NORTH

Contact
Tel: +353 (0) 832060088 heritagetreesireland@gmail.com

HERITAGE TREE CARE LTD.