

OCSC

O'CONNOR · SUTTON · CRONIN

MULTIDISCIPLINARY CONSULTING ENGINEERS

Z040: BLACKGLEN ROAD LRD

TRAFFIC & TRANSPORTATION ASSESSMENT

For
Zolbury Ltd

17 December 2024

NOTICE

This document has been produced by O'Connor Sutton Cronin & Associates for its client, Zolbury Ltd. It may not be used for any purpose other than that specified by any other person without the written permission of the authors.

DOCUMENT CONTROL & HISTORY

OCSC Job No: Z040	Project Code	Originator	Zone Volume	Level	File Type	Role Type	Number	Status / Suitability Code	Revision
	Z040	OCSC	XX	XX	RP	C	0104	S4	P04

Rev.	Status	Authors	Checked	Authorised	Issue Date
P01	S2	Wian Marais	Patrick Raggett	Anthony Horan	7/06/2024
P02	S4	Wian Marais	Patrick Raggett	Anthony Horan	18/06/2024
P03	S2	Wian Marais	Patrick Raggett	Anthony Horan	8/11/2024
P04	S4	Wian Marais	Patrick Raggett	Anthony Horan	17/12/2024

TABLE OF CONTENTS

1 INTRODUCTION 1
1.1 APPOINTMENT 1
1.2 ADMINISTRATIVE JURISDICTION 1
1.3 STUDY AREA 1
1.4 DEVELOPMENT DESCRIPTION 2
2 BACKGROUND TRAFFIC VOLUMES 4
3 STUDY METHODOLOGY 6
3.1 COMMITTED DEVELOPMENTS 6
3.2 PEAK HOURS 8
3.3 AADT CONVERSION 8
3.4 SCENARIOS 8
3.5 TRAFFIC GROWTH 9
4 THE RECEIVING ENVIRONMENT 11
4.1 EXISTING PUBLIC TRANSPORT, CYCLE & PEDESTRIAN FACILITIES 11
4.2 CAPACITY OF EXISTING PUBLIC TRANSPORT 14
5 CHARACTERISTICS OF THE DEVELOPMENT 18
5.1 DEVELOPMENT OVERVIEW 18
5.2 SITE ACCESSIBILITY 19
5.3 TRIP GENERATION 21
6 PARKING STRATEGY 23
6.1 PARKING STANDARDS 23
6.2 PARKING PROVISION 27
7 POTENTIAL IMPACT OF DEVELOPMENT CONSTRUCTION 30
7.1 CONSTRUCTION TRAFFIC MANAGEMENT PLAN 30
7.2 CONSTRUCTION TRAFFIC VOLUMES 30
8 POTENTIAL IMPACT OF DEVELOPMENT OPERATION 32
8.1 LINK CAPACITIES 32
8.2 JUNCTION CAPACITIES 34
9 SUMMARY & CONCLUSIONS 38
10 VERIFICATION 39

APPENDICES

APPENDIX A TRAFFIC FLOW DIAGRAMS
APPENDIX B TRAFFIC SURVEY DATA
APPENDIX C TRICS OUTPUT FILE
APPENDIX D MODEL OUTPUT FILES

LIST OF FIGURES

Figure 1: Site Location 2
Figure 2: Junction Survey Locations 4
Figure 3: Indicative Locations of Committed Developments in the Study Area 7
Figure 4: Luas Map 11
Figure 5: Bus Stops in Vicinity of the Development 13
Figure 6: Commuting Departure Time for Electoral Division of Dundrum-Sandyford as per Census 2022 16
Figure 7: Means of Travel for Electoral Division of Dundrum-Sandyford as per Census 2022 17
Figure 8: Proposed Site Layout 18
Figure 9: TL607 Toucan Crossing (Source: Cycle Design Manual) 19
Figure 10: Development Access and Road Layout 20

LIST OF TABLES

Table 1: Junction Survey Details 4
Table 2: Scenario Roadmap 9
Table 3: Background Traffic Growth Factors 9
Table 4: Glencairn Luas Frequency - Monday – Friday 12
Table 5: Glencairn Luas Frequency – Saturday 12
Table 6: Glencairn Luas Frequency – Sunday & Bank Holidays 12
Table 7: Estimated Trips Generated 21
Table 8: Car Parking Provision 28
Table 9: Bicycle Parking Provision 29
Table 10: Estimate of Peak Construction Vehicle Movements 31
Table 11: Urban Road Capacities 32
Table 12: Base Year Link RFC Values for Local Network 33
Table 13: Opening Year Do Something Link RFC Values for Local Network 33
Table 14: Design Year Do Something Link RFC Values for Local Network 34
Table 15: Average Queue Lengths per Junction 35
Table 16: Junction Impact 36
Table 17: Access Junction Analysis Results 36
Table 18: Controlled Crossing Analysis Results 37

1 INTRODUCTION

1.1 APPOINTMENT

O'Connor Sutton Cronin & Associates (OCSC) have been appointed by Zolbury Ltd. to prepare this Traffic & Transportation Assessment (TTA) with respect to the proposed residential development comprising the design of 192 no. residential units, associated resident amenity facilities and a childcare facility at Blackglen Road, Sandyford.

1.2 ADMINISTRATIVE JURISDICTION

The proposed development is located in the jurisdiction of Dún Laoghaire-Rathdown County Council (DLRCC), and therefore this assessment has given due consideration to the relevant guidelines including:

- Traffic & Transport Assessment Guidelines (2014) as published by the former National Roads Authority (NRA) now Transport Infrastructure Ireland (TII);
- Guidelines for Traffic Impact Assessment (1997) as published by the Chartered Institute of Highways & Transportation;
- Dún Laoghaire-Rathdown County Development Plan 2022 – 2028; and
- Sustainable Urban Housing: Design Standards for New Apartments – July 2023.

1.3 STUDY AREA

The subject site is located at lands at Blackglen Road in Sandyford, Co. Dublin as shown in the figure overleaf. The proposed development site is immediately bound by:

- Blackglen Road to the north;
- Residential properties to the east, south, and west; and
- Woodside Road to the west and south.



Figure 1: Site Location

1.4 DEVELOPMENT DESCRIPTION

Zolbury Ltd., intend to apply to Dun Laoghaire Rathdown County Council for permission for development for a Large Scale Residential Development (LRD) on a site of approx. 3.86ha on lands at Blackglen Road, Sandyford, Dublin 18.

The development will consist of 192 no. residential units ranging from 2-5 storeys in height, associated resident amenity facilities, a childcare facility, all boundary treatment and landscaping works, site services connections and all site development works to include:

(a) Construction of 192 no. residential units, in the form of 6 no. new apartment buildings (A1 – B4), 40 duplexes (C1, C2, C2A) and 14 houses (D1 & D2), to include 33 no. 1-beds, 84 no. 2 -beds, 61 no. 3-beds and 14 no. 4-beds as follows:

- Block A1 (4 storeys) comprising 15 no. apartments (3 no. 1 bed units, 6 no. 2 bed units & 6 no. 3 bed units); a crèche facility of approx. 378.2 sq. m with associated outdoor play space of approx. 170 sq. m; and resident amenity facilities of approx. 31.6 sq. m.
- Block A2 (3-4 storeys) comprising 26 no. apartments (2 no. 1 bed units, 20 no. 2 bed units and 4 no. no. 3 bed units) and resident amenity facilities of approx. 353.6 sq. m.
- Blocks B1 and B2 (2-5 storeys) comprising 51 no. apartments (15 no. 1 bed units, 29 no. 2 bed units, 7 no. 3 bed units).
- Blocks B3 and B4 (2-5 storeys) comprising 46 no. apartments (13 no. 1 bed units, 23 no. 2 bed units and 10 no. 3 bed units).
- Duplex Units C1 (4 storeys), C2 and C2A (3 storeys) comprising 40 duplexes (6 no. 2 bed units, 20 no. 3 bed units and 14 no. 4 bed units).
- House Units D1 and D2 (2 storeys) comprising 14 houses (14 no. 3 bed units).

(b) Total Open space (approx. 10,854 sq. m) is proposed in the form of public open space (approx. 8, 686 sq. m), and residential communal open space (approx. 2,168 sq. m). Each residential unit is afforded with associated private open space in the form of a garden/terrace/balcony.

(c) The development will be served via a new vehicular access via Blackglen Road. This will be designed as a priority junction with pedestrian and cycle crossings where required to tie in with the Blackglen Road Improvement Scheme.

(d) A new toucan crossing is proposed across Blackglen Road just to the east of the new vehicular access. This toucan crossing has been designed as per TL607 of the Cycle Design Manual to allow crossing of pedestrians and cyclists to the northern side of Blackglen Road for improved public transport access.

(e) Emergency access only is proposed via Woodside Road.

(f) A dedicated wildlife corridor is proposed to the east/south-east side of the site and a public open space (approx. 307 m in length) tree trail to the west/north-west side of the site.

(g) Basement/Podium car park areas are proposed below Blocks B1, B2, B3 and B4. A total of 226 no. car parking spaces are proposed, which includes 2 no. car club spaces, 12 no. accessible spaces and 47 no. EV charging spaces (198 no. long-stay spaces, 18 no. visitor space & 10 no. car parking spaces for creche use), in addition to 9 no. motorcycle spaces.

(h) A total of 484 no. bicycle spaces are proposed in the form of 442 no. long stay bicycle spaces 42 short-term stay visitor parking.

(i) 2 no. ESB substations at surface level.

(j) Bin Storage areas for the Duplex blocks are proposed at ground level adjacent to the Duplex blocks.

(k) All associated site and infrastructural works to include provision for water services; foul and surface water drainage and connections; internal roads, attenuation proposal; permeable paving; all landscaping works including green infrastructure zones; green roofs; and general plant areas; photovoltaic panels; landscaped boundary treatment; footpaths; public lighting; and electrical services.

2 BACKGROUND TRAFFIC VOLUMES

Background traffic volumes are based on junction surveys conducted at several locations in the study area. Details of the junction surveys used for this development are shown in the table below:

Table 1: Junction Survey Details

No	Junction	Source	Survey Date	Survey Times
1	Kellystown Road/Harolds Grange Road/ College Road	NDC	23/04/2024	07:00 to 19:00
2	Blackglen Road/Ticknock Road	NDC	23/04/2024	07:00 to 19:00
3	R113 Blackglen Road/Woodside Road	NDC	23/04/2024	07:00 to 19:00
4	Enniskerry Road/Hillcrest Road/Blackglen Road	NDC	23/04/2024	07:00 to 19:00
5	Leopardstown Road/Kilgobbin Road/Hillcrest Road	NDC	23/04/2024	07:00 to 19:00

An eight-fold classification system was used which recorded cars, taxis, light goods vehicles, two classes of heavy goods vehicles, public service vehicles, motorcycles, and bicycles.

The exact locations of these junctions are highlighted in the figure below.



Figure 2: Junction Survey Locations

Junction surveys also include queue length surveys which recorded the maximum queue lengths observed on a per-lane basis at each approach of each junction over 15-minute intervals.

A full copy of the results of all traffic surveys can be found in *Appendix B*, attached to this report.

The recorded flows during the identified peak hours, and across the course of an average day (Average Annual Daily Traffic – AADT) are shown in the following:

- Diagram 1: 2024 AM Peak – Do Nothing.
- Diagram 2: 2024 PM Peak – Do Nothing.
- Diagram 3: 2024 AADT – Do Nothing.

These diagrams, and all others referenced in this text, can be found in *Appendix A*, attached to this report. Any apparent discrepancy in flows between sites may be attributed to vehicles accessing developments and minor roads between surveyed junctions.

3 STUDY METHODOLOGY

The short-term traffic counts were expanded to Annual Average Daily Traffic (AADT) using expansion factors[1] from TII. The base year flows were then adjusted to the predicted Year of Opening for the development (2029) and the Design Year (2044) using medium-range TII growth factors[2]. This is conservative as traffic growth estimates are directly influenced by projections for economic activity which are now unlikely to be realised due to the impact of the global pandemic, while commuter patterns are also expected to be permanently impacted.

The traffic generation potential of the subject site was then assessed using the Trics[3] planning database. This database contains information on thousands of sites in Ireland and the U.K. and can be used to predict the traffic that will be generated by numerous types of development.

The estimated additional traffic was assigned to the local road network and its impact on the operation of the local links and junctions was assessed using guidance from TII, DLRCC, the *Design Manual for Roads and Bridges* (DMRB), Junctions 9 and Transyt 15 traffic modelling software.

3.1 COMMITTED DEVELOPMENTS

A number of committed developments within the study area were considered for the traffic analysis. They include the following developments:

- **ABP31332122 – Heronbrook SHD:** This strategic housing development consists of the demolition of the existing, derelict, former residential structures on the site and the construction of 101 no. residential units and a creche (13,127 sq m gross floor area in total). The residential element comprises a mix of houses (9no. 2 beds, 16no. 3beds, 6no. 4 beds and 1 no. 5 beds); duplexes (3 no. 2 beds and 10 no. 3 beds) and apartments (14no. 1 beds, 35no. 2 beds and 7no. 3 beds).
- **ABP31454622 – Ironborn SHD 3:** This strategic housing development consists of 436 no. 'Build-to-Rent' apartment units (154 no. 1. bedroom units & 284 no. 2 bedroom units) arranged in 9 no blocks ranging in height from 2-8 storeys over 2 no. independent single-level basements. Private patios/terraces and balconies are provided for some apartment units (not all units have a patio, terrace or balcony). Upper-level balconies are proposed on elevations of all multi-aspect apartment buildings.
- **ABP31166921 – Rocklawn SHD:** This strategic housing development consists of the construction of 112 No. Build to Rent Apartments (72 No. one-bedroom apartments; and 40 No. two-bedroom apartments) arranged in 2 No. Apartment Blocks. Block A is principally 4 No. stories in height with a 6 No. storey element, Block B is principally 4 No. stories in height with a 5 No. storey element. This includes c.320 sqm

[1] Project Appraisal Guidelines for National Roads Unit 16.1 - Expansion Factors for Short Period Traffic Counts, TII (October 2016)
[2] Project Appraisal Guidelines for National Roads Unit 5.3 - Travel Demand Projections, TII (May 2021)
[3] **T**rip **R**ate **I**nformation **C**omputer **S**ystem

of residential amenity space in 2 No. dedicated spaces located on the Ground Floor of Blocks A and B, together with post and parcel storage facilities; waste storage facilities; 144 No. secure bicycle parking spaces; and, 1 No. external ESB substation/ switch room (c. 27 sqm).

- **ABP31344322 – Karuna and Glenina SHD:** This strategic housing development consists of the demolition of the existing dwelling and ancillary buildings known as 'Glenina', the existing dwelling known as 'Karuna' and the existing boundary wall fronting Sandyford Road, and the construction of a residential development principally comprising 137 No. apartments (32 No. 1-bed units, 78 No. 2-bed units and 27 No. 3-bed units) in 4 No. blocks ranging in height from part-1 No. storey to part-6 No. storeys with a part-basement/part-undercroft level (at Blocks B, C and D).

The indicative locations of these committed developments with respect to the development location can be seen in the figure below:

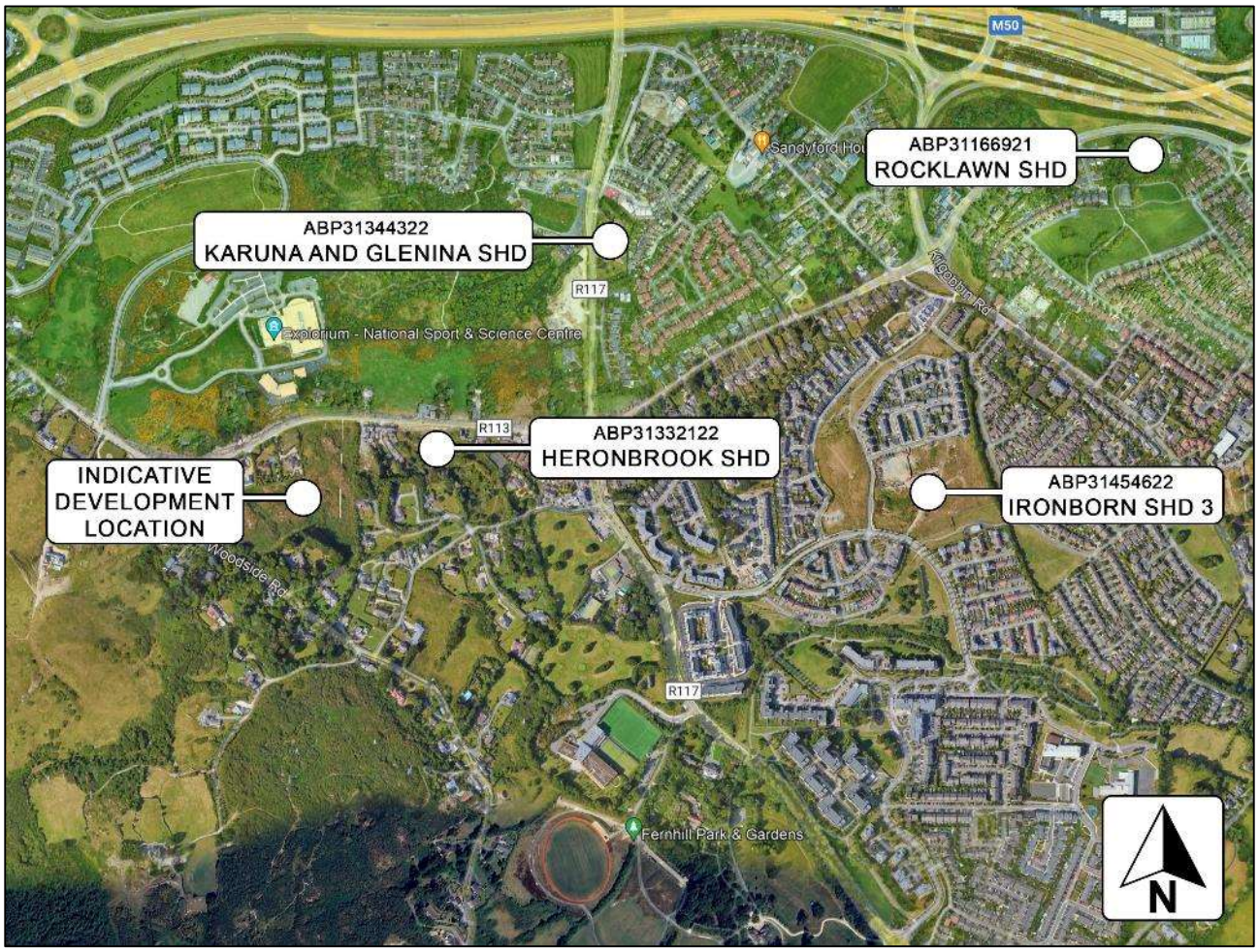

Figure 3: Indicative Locations of Committed Developments in the Study Area

3.2 PEAK HOURS

A combination of the junction surveys and the trip distribution for the proposed development were used to determine the applicable peak hours.

Since the development is residential in nature, the highest demand will be based on standard commuter travel patterns. This means that the following peak hours will be applicable to the development:

- AM Peak: 08:00 – 09:00; and
- PM Peak: 17:00 – 18:00.

Since the development's demand, and subsequently, its impact on the local road network and surrounding junctions is the highest during the above periods, these hours were chosen as the applicable peak hours relevant to the assessment.

3.3 AADT CONVERSION

Junctions were surveyed from 7:00 to 19:00, which represents the period when demand is the highest on the local road network. In order to expand these surveys to Average Annual Daily Traffic (AADT), guidance from TII was used, as defined in the *Project Appraisal Guidelines for National Roads Unit 16.1 – Expansion Factors for Short Period Traffic Counts – October 2016*.

This document provides 95% confidence intervals for 24-hour flow estimations based on eleven (11) different regions. This development is located within the *Dublin Region* which means that traffic on the road network between 7:00 and 19:00 represents 83.3% of the total daily demand. This factor was used to expand the junction survey volumes to the full daily demand.

3.4 SCENARIOS

To assess the actual impact of the operational development on the local road network, three different scenarios have been analysed as follows:

- *Base Year (2024)* – The current performance of the local road network;
- *Year of Opening (2029)* – The performance of the local road network during the Year of Opening;
- *Design Year (2044)* – The performance of the local road network during the Design Year.

The future year assessments considered the following scenarios:

- *Do Nothing:* - This assessment allows for natural background traffic growth, based on TII growth rates, with the inclusion of all *Committed Development* trips as discussed previously. This scenario is applicable to all analysis years.
- *Do Something:* - This assessment allows for everything considered in the Do Nothing scenario, with the addition of the trips generated by the development. This scenario is only applicable to the Year of Opening and Design Year.

In summary, the full scenario roadmap, which will be used as part of the analysis, is shown in Table 2 below:

Number	Peak	Year	Scenario
1	AM Peak	2024	Do Nothing
2		2029	Do Nothing
3		2029	Do Something
4		2044	Do Nothing
5		2044	Do Something
6	PM Peak	2024	Do Nothing
7		2029	Do Nothing
8		2029	Do Something
9		2044	Do Nothing
10		2044	Do Something

Table 2: Scenario Roadmap

3.5 TRAFFIC GROWTH

To accurately assess the impact of the proposed development in the future, the base traffic flows for the local network in 2024 have been expanded to the Year of Opening and the Design Year using the medium-range TII growth factors (as defined in PE-PAG-02017 - October 2021) detailed in the table below:

Year	Growth Rates	
	Light Vehicles	Heavy Vehicles
2024 - 2029	109.33%	116.89%
2024 - 2044	120.78%	147.40%

Table 3: Background Traffic Growth Factors

These factors allow for a variety of factors including additional traffic generated by developments in the local and wider area, increased levels of car ownership and increased vehicle trips as a result of projected improvements to economic activity. This is considered a conservative approach given the following reasons:

- While the Covid-19 pandemic occurred a number of years ago and can be considered irrelevant at this stage, its relevance on commuter trips and associated travel patterns cannot be ignored. Restrictions previously imposed because of the pandemic response have resulted in a significant portion of the population being forced to work from home. This has highlighted the viability of this approach in industries where it was previously thought to be incompatible. The knock-on effect has been that a percentage of workers have continued to be based at home on a part- or full-time basis post-pandemic. This in turn has had a knock-on effect on commuter and peak traffic levels. The 2022 Census has shown that nearly 750,000 people, a third of workers (32%), indicated that they worked from home for at least some part of their week. These elements have not been accounted for in the shown growth rates. As noted by TII, *"The return to the workplace for a cohort of people will potentially be a blended mix of home/office work, and this change in home working arrangements has the potential to reduce overall travel demand on the National Roads Network relative to existing projections of future demand."; and*
- A large component of the growth rate accounts for future development in the area. For both the future Do Nothing scenarios and Do Something scenarios, additional developments in the area have already been considered (as described in Section 3.1). This means that the addition of further traffic growth rates could potentially lead to an element of double counting of trips.

Thus, considering the above, the applied growth factors are very conservative.

The future year traffic flows, which include demand from committed developments but do not include trips generated by the Blackglen Road LRD development, can be seen in *Appendix A* as follows:

- Diagram 4: 2029 AM Peak – Do Nothing.
- Diagram 5: 2029 PM Peak – Do Nothing.
- Diagram 6: 2029 AADT – Do Nothing;

- Diagram 7: 2044 AM Peak – Do Nothing.
- Diagram 8: 2044 PM Peak – Do Nothing.
- Diagram 9: 2044 AADT – Do Nothing.

4 THE RECEIVING ENVIRONMENT

The site is located in close proximity to a number of public transport services including both rail and bus as discussed in this chapter.

4.1 EXISTING PUBLIC TRANSPORT, CYCLE & PEDESTRIAN FACILITIES

4.1.1 RAIL SERVICES

The northern boundary of the site is located approximately 1.9km (27 min) walk, 9 min cycle) from Glencairn Luas Station (Green Luas Line). This station provides access to Brides Glen in the east and Broombridge in the north. This forms part of the wider Luas network throughout the Greater Dublin Area and links the site directly to Dublin City Centre and the Red Luas, as set out in the following figure.

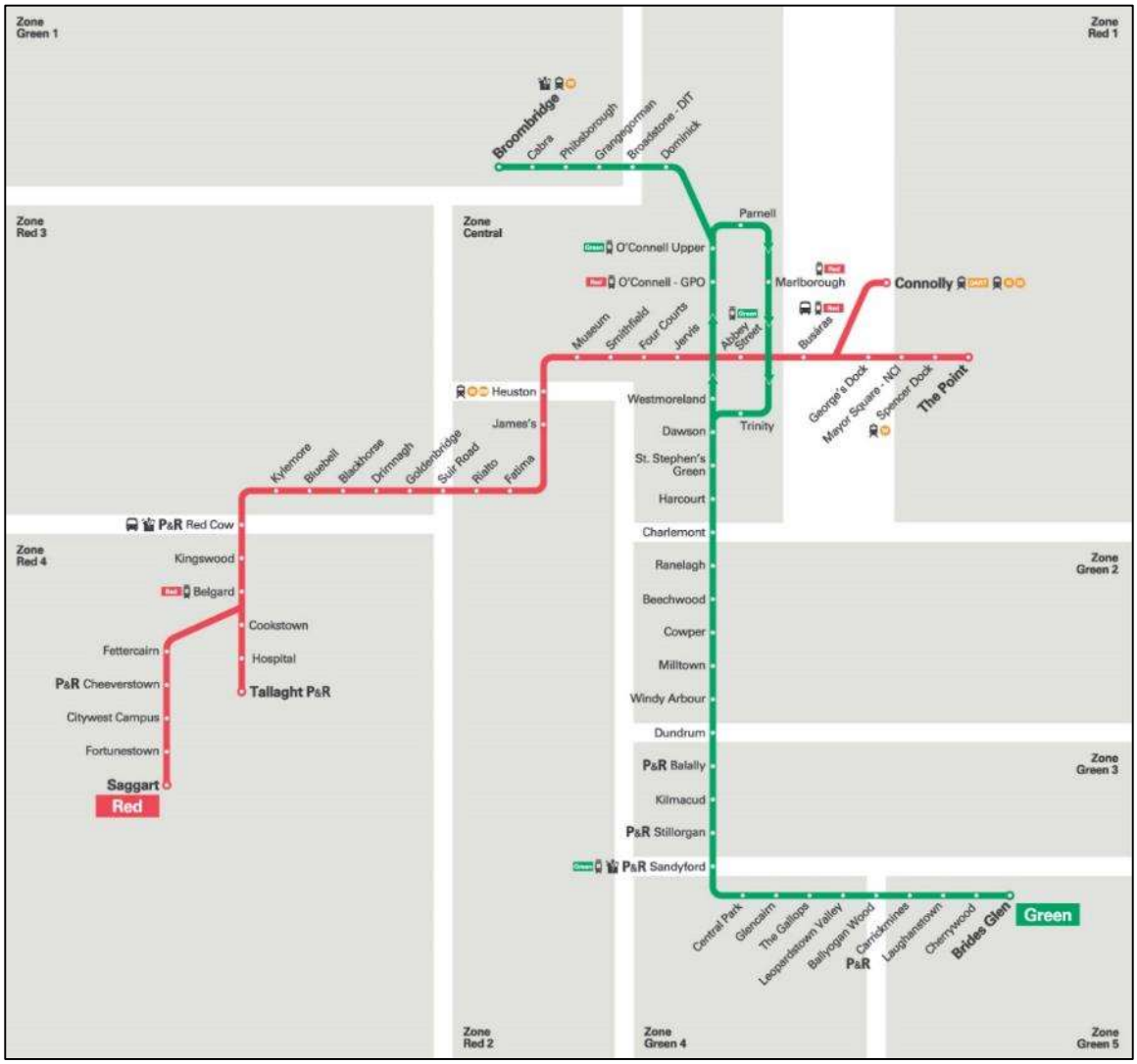

Figure 4: Luas Map

The frequency of the Luas Green Line at the Glencairn Station is shown in the tables below:

Period	Northbound			Southbound		
	Min	Avg	Max	Min	Avg	Max
05:44 – 07:00	10	16	20	6	12	21
07:00 – 10:00	6	9	14	4	9	14
10:00 – 16:00	12	13	14	13	13	15
16:00 – 19:00	6	10	16	6	10	14
19:00 – 00:14	12	13	15	10	13	19

Table 4: Glencairn Luas Frequency - Monday – Friday

Period	Northbound			Southbound		
	Min	Avg	Max	Min	Avg	Max
06:44 – 10:00	15	16	20	6	16	27
10:00 – 16:00	14	14	15	8	14	23
16:00 – 19:00	14	14	14	14	14	14
19:00 – 00:14	7	14	15	13	14	15

Table 5: Glencairn Luas Frequency – Saturday

Period	Northbound			Southbound		
	Min	Avg	Max	Min	Avg	Max
07:14 – 12:00	12	14	20	5	14	27
12:00 – 19:00	12	12	12	12	12	12
19:00 – 23:14	12	13	15	12	13	17

Table 6: Glencairn Luas Frequency – Sunday & Bank Holidays

4.1.2 BUS SERVICES

The northern boundary of the site is located approximately 120m (2-minute walk, 1 min cycle) from the nearest bus stop, Blackglen Court Stop 3533 East and stop 3494 West, which is served by Dublin Bus Service No. 44B and Go ahead service 114.

These services operate during peak hours, every 30 minutes, and provide connections to the following nearby urban centres:

- Dublin Bus 44b provides a connection between the Dundrum Luas Station, Dundrum, Sandyford and Glencullen.
- Go Ahead service 114 provides access to Blackrock Station, Stillorgan Road, Ravenscourt Park and Rockview.

Neither bus route currently provides connections to the city centre. It is noted that BusConnects' plan for the area includes the introduction of bus services 86, 87, 88 and L33. Although these services will provide connections to the city centre, they are not expected to be "high frequency".

The exact location of the stops in relation to the development can be seen in the figure below.



Figure 5: Bus Stops in Vicinity of the Development

4.1.3 CYCLING AND WALKING

The local cycle facilities within DLR currently consist of Radial and Orbital Cycle Routes, which span most of the county. The radial routes mainly service north-south movements, while the orbital routes service east-west movements. The closest connection with the DLR cycle route is on the R117, which is approximately 450m (1 min cycle) from the northern boundary of the site.

The recently completed Blackglen Road Improvement Scheme has significantly improved walking and cycling infrastructure in the area by adding cycle tracks and footpaths to Blackglen Road. Internal active travel infrastructure at the development will tie in with the newly constructed cycle tracks and footpaths to ensure residents have a high degree of accessibility via these modes.

4.2 CAPACITY OF EXISTING PUBLIC TRANSPORT

Public transport capacity surveys were conducted at bus stop no. 3533 and 3494 along Blackglen Road at the frontage to the development (see Figure 5), and at the Glencairn Luas stop. These surveys were conducted by NDC on 23 April 2024 during the morning and afternoon peak hours and are attached to this report under *Appendix B*. The following observations were made as part of the surveys:

4.2.1 STOP NO. 3533

This stop is located on Blackglen Road and serves vehicles travelling in an eastbound direction. The following observations were recorded at this stop:

- During the morning peak hour, a total of 4 buses were observed:
  - 1 no. 114 bus with an estimated seating capacity of 66 no. passengers. It was observed that the occupancy of this bus was approximately 50%;
  - 1 no. 448 bus with an estimated seating capacity of 45 no. passengers. It was observed that the occupancy of this bus was approximately 25%; and
  - 2 no. private buses with estimated seating capacities of 45 and 35 no. passengers. These buses were observed to have an occupancy of approximately 25% each.
- It should be noted that these buses did not stop at this bus stop, which means that no additional passengers boarded or alighted the vehicles.
- During the afternoon peak hour, a total of 2 buses were observed:
  - 2 no. 114 buses with an estimated seating capacity of 66 no. passengers. These buses were observed to have an occupancy of approximately 0% and 25% respectively.
  - 2 no. 448 buses were observed just before and after the peak hour with occupancies of approximately 25% each.
- Similar to the morning peak hour these buses did not stop at this bus stop, which means that no additional passengers boarded or alighted the vehicles.

Based on the above observations, it is evident that the buses passing this stop during the peak hours have a high amount of reserve capacity for additional passengers to utilise this service.

4.2.2 STOP NO. 3494

This stop is located on Blackglen Road and serves vehicles travelling in a westbound direction. The following observations were recorded at this stop:

- During the morning peak hour, a total of 3 buses were observed:

- 1 no. 114 bus with an estimated seating capacity of 66 no. passengers. It was observed that the occupancy of this bus was approximately 25%;
- 2 no. private buses with estimated seating capacities of 35 no. passengers each. These buses were observed to have an occupancy of approximately 25% each; and
- 2 no. 448 buses were observed just before and after the peak hour with occupancies of approximately 25% each.

- It should be noted that these buses did not stop at this bus stop, which means that no additional passengers boarded or alighted the vehicles.
- During the afternoon peak hour, a total of 2 buses were observed:
  - 1 no. 114 bus with an estimated seating capacity of 66 no. passengers. It was observed that the occupancy of this bus was approximately 25%;
  - 1 no. 448 bus with an estimated seating capacity of 45 no. passengers. It was observed that the occupancy of this bus was approximately 25%.
- The 114 bus did not stop, however, the 448 bus did stop and alighted 1 no. passenger with no passengers boarding.

Based on the above observations, it is evident that similar to Stop No. 3533, buses passing this stop during the peak hours have a high amount of reserve capacity for additional passengers to utilise this service.

4.2.3 GLENCAIRN LUAS STOP

As mentioned previously, the northern boundary of the site is located approximately 1.9km (27 min) walk, 9 min cycle) from Glencairn Luas Station (Green Luas Line). As such, this stop was also surveyed to determine available capacity for additional passengers which might be generated by the development.

The Luas tram has an estimated seating capacity of 96 no. passengers with a further 262 no. standing capacity. The following observations were recorded at this stop:

- During the morning peak hour, a total of 11 no. northbound and 7 no. southbound services were observed:
  - In a northbound direction, the occupancy was observed to be on average 82% with an average of 33 passengers boarding and 3 passengers alighting per service.
  - In a southbound direction, the occupancy was observed to be on average 47% with an average of 8 passengers boarding and 7 passengers alighting per service.
- During the afternoon peak hour, a total of 6 no. northbound and 7 no. southbound services were observed:
  - In a northbound direction, the occupancy was observed to be on average 63% with an average of 14 passengers boarding and 4 passengers alighting per service.
  - In a southbound direction, the occupancy was observed to be on average 82% with an average of 4 passengers boarding and 48 passengers alighting per service.

From the above observations, it is evident that there is fair demand for passengers travelling north during the morning peak hour, and south during the afternoon peak hour, with demand being low in the opposite direction. While the demand for the Luas service north towards Dublin is relatively high, it should be noted that the development does not account for a high public transport component. An estimated public transport demand is detailed in the section below.

4.2.4 ESTIMATED PUBLIC TRANSPORT DEMAND

The scale of the development is estimated to cater for approximately 529 residents (based on assumed average occupancy of 1.5 people per 1 bed, 2.5 people per 2 bed, 3.5 people per 3 bed and 4 people per 4 bed). These trips will also be spread out over a longer period which will further limit the potential impact on existing services as per the following extract indicating the time of commute for the Electoral Division of Dundrum-Sandyford, in which the development site is located, from the 2022 Census.

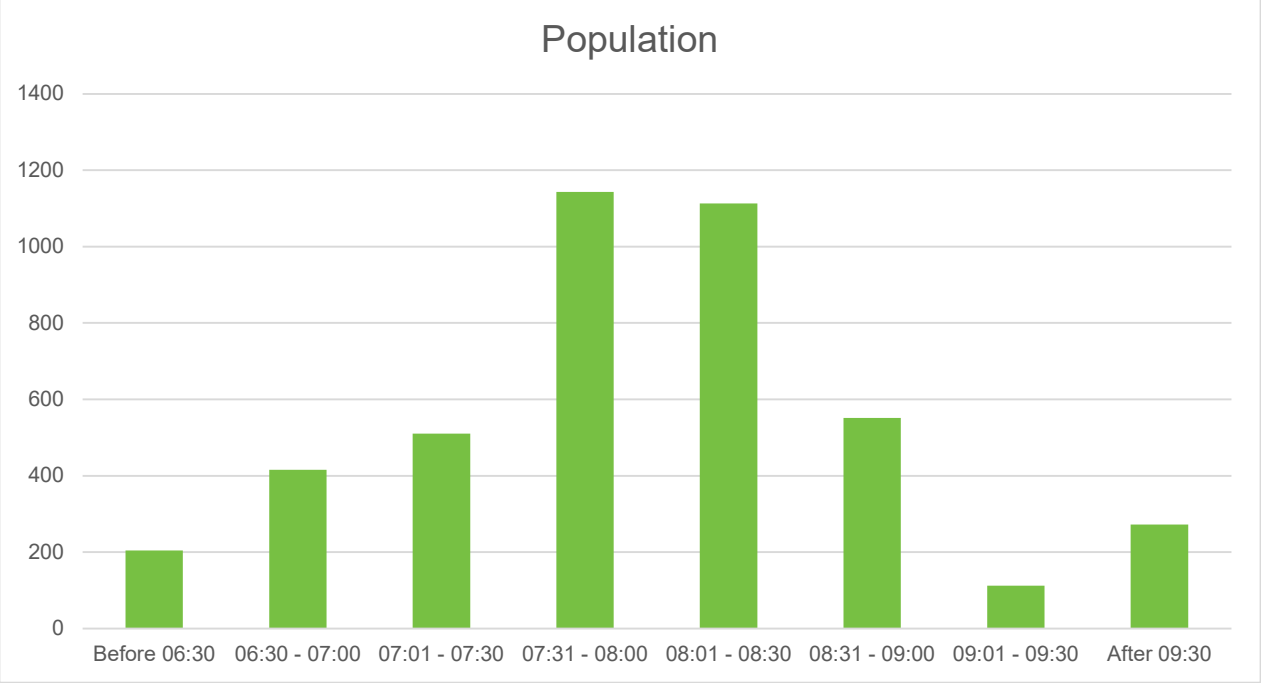

Figure 6: Commuting Departure Time for Electoral Division of Dundrum-Sandyford as per Census 2022

The above indicates that the peak commuting period will see 52.2% of residents leave during the period of 07:30-08:30. This will be further diluted among various modes with a portion attributed to car drivers and active modes as well as public transport.

Furthermore, not all residents will need to travel. The Census data for this Electoral Division indicates an overall population of 7,638 residents but only 5,613 (73.5%) were noted as being commuters for work or school.

Based on this, it is estimated that approximately 203 no. residents will have a need to travel during the morning peak hour.

Interrogating the *Means of Travel* for this Electoral Division reveals the modal split for this area, as shown in the figure below:

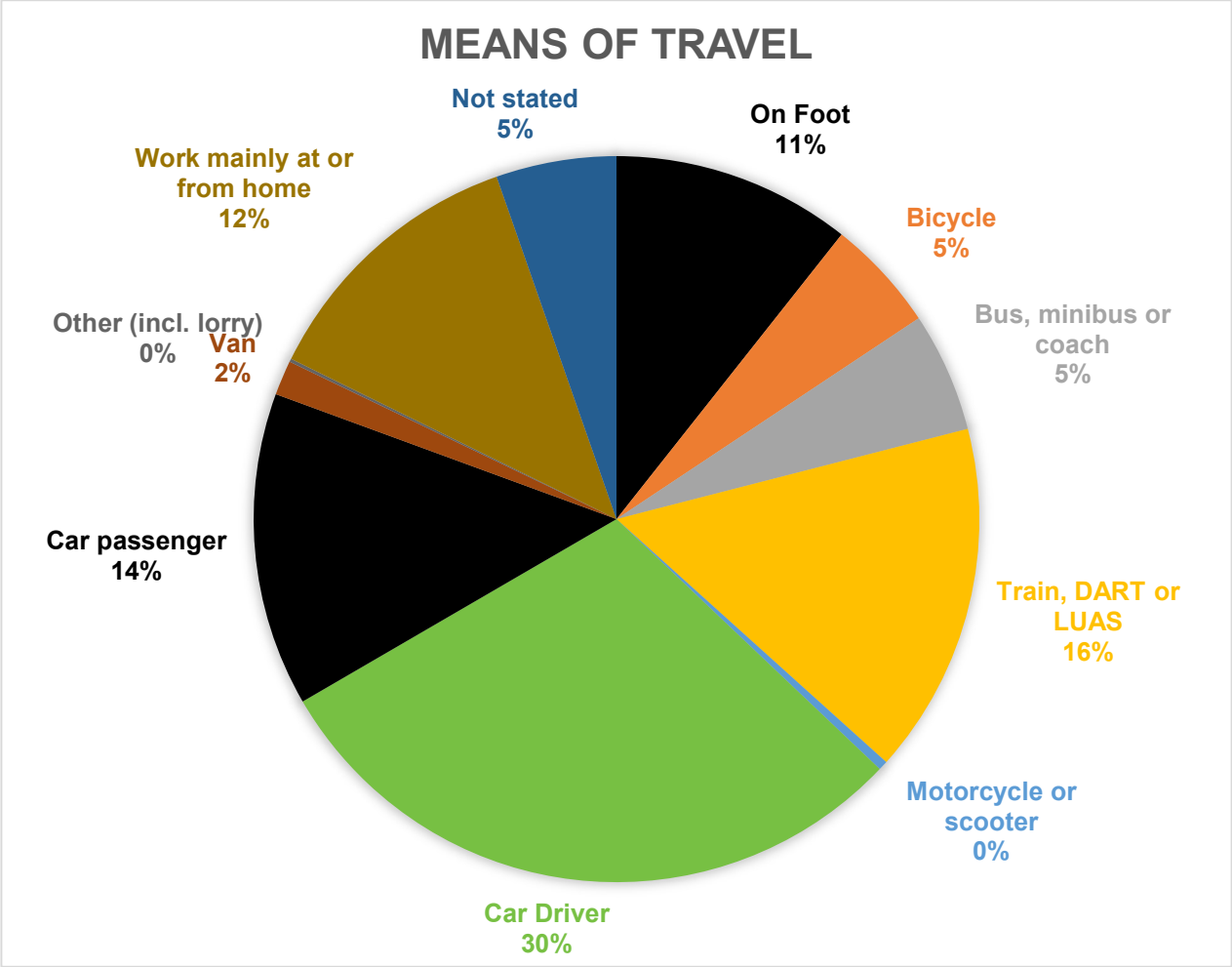

Figure 7: Means of Travel for Electoral Division of Dundrum-Sandyford as per Census 2022

Applying the above modal split (5% bus and 16% rail) to the previous estimation of 203 no. residents travelling within the morning peak hour leads to a potential public transport usage of 11 bus passengers and 32 rail passengers.

In reality, due to the location of the bus stops and the Luas stop relative to the development, it is likely that bus usage will be slightly higher with rail usage being lower, however from this estimation it is evident that the additional public transport journeys potentially generated by the Blackglen LRD development will not have a detrimental impact on the existing services provided in its vicinity.

5 CHARACTERISTICS OF THE DEVELOPMENT

5.1 DEVELOPMENT OVERVIEW

The proposed LRD development will consist of the following elements:

192 no. residential units, associated resident amenity facilities and a childcare facility as follows:

- 138 no. apartments;
- 40 no. duplexes;
- 14 no. houses; and
- A crèche facility of approx. 378 sq. m.

The proposed site layout plan is shown in the figure below.



Figure 8: Proposed Site Layout

5.2 SITE ACCESSIBILITY

The proposed vehicular access to the site will be via Blackglen Road. This was designed as a priority junction with pedestrian and cycle crossings where required, based on the outcome of this analysis. The proposed entrance has been designed in accordance with the requirements of DMURS, particularly with respect to sightline requirements (Section 4.4.5), corner radii (Section 4.3.3) and pedestrian infrastructure (Section 4.3). The construction drawings were sourced from the recently completed Blackglen Road Improvement Scheme and all proposed infrastructure at the site access tie in with the recently constructed infrastructure.

The site will also feature access on the southwestern side, on Woodside Road; however, it should be noted that this access will only be used as an emergency access. This access will be closed off with retractable bollards spaced less than 2m apart to prevent cars from entering. The bollards will be managed by the concierge, with the ability to lower the bollards in case of emergency. It should however be noted that this access has only been provided as an alternative access for a situation where the main spine road is blocked or access to the upper hillside is restricted. In most instances, the main access will be used for emergencies. This access will also serve as a pedestrian and cycle access to provide permeability through the site.

In addition to the above accessibility, it is also proposed to provide a controlled crossing across Blackglen Road as per TL607 (Toucan Crossing) of the Cycle Design Manual.

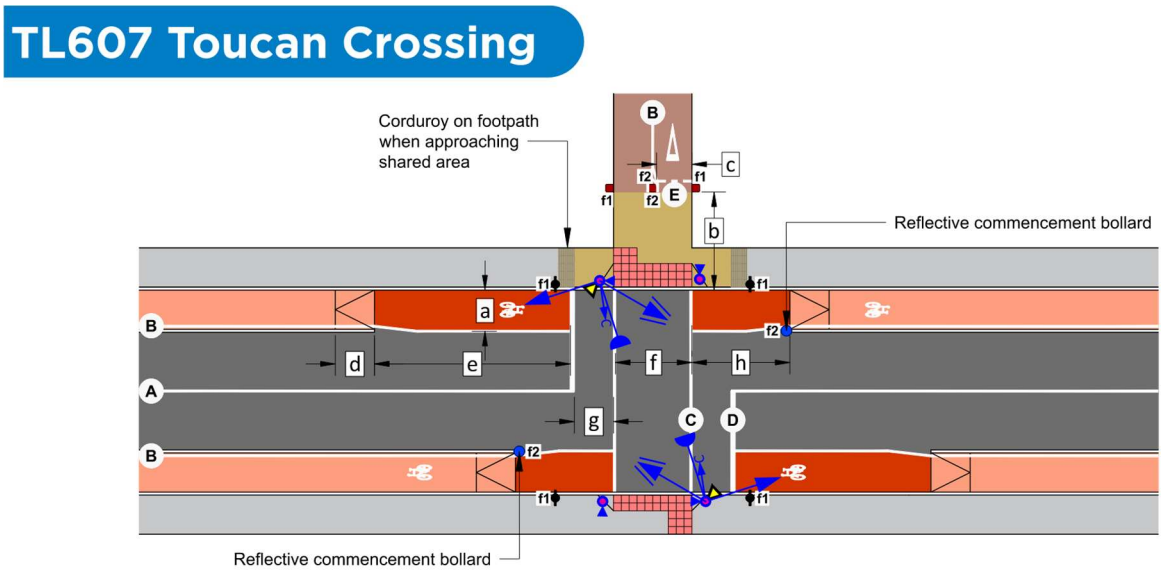

Figure 9: TL607 Toucan Crossing (Source: Cycle Design Manual)

The proposed link roads and streets together with the junctions, footpaths and cycle facilities will be designed per the requirements of the Design Manual for Urban Roads and Streets (DMURS) and the National Cycle Manual (NCM). DMURS is the design philosophy used in the design of all new residential roads and urban streets and the key objective of DMURS is to achieve safe, attractive, and vibrant streets by balancing the needs of all users and prioritising alternatives to car journeys. The subject site will be fully consistent with this

recommended approach whilst also facilitating efficient and secure internal movement. The proposed site layout encourages permeability through the site, connecting to the wider area via pedestrian links and cycleways and seeks to prioritise pedestrians and cyclists under the policies set out in DMURS.

The site will include an access road with minor roads branching off as shown in the figure below:



Figure 10: Development Access and Road Layout

5.3 TRIP GENERATION

The traffic generation potential of the proposed development has been estimated using the Trics software modelling database. This database contains records of surveys carried out at a range of development types across the UK and Ireland. It records a variety of details including the number and type of vehicles entering and exiting the site as well as several other site-specific factors.

When developing traffic generation estimates for any development, several surveys are selected from the database based on a range of factors including development type, size, location, public transport etc. The results are then used to establish trip rates for the development in question which is ultimately used to derive estimates for traffic generation.

The trip generation estimates for the proposed residential development are shown in the table below. The Trics output files relative to this assessment can be found in *Appendix C* of this report.

Time Range	Residential		Creche		Total		
	192	Units	400	sqm			
	Arrivals	Departures	Arrivals	Departures	Arrivals	Departures	Total
07:00-08:00	18	50	11	2	29	52	81
08:00-09:00	**23**	**53**	**11**	**10**	**35**	**63**	**98**
09:00-10:00	24	32	4	4	28	36	64
10:00-11:00	28	26	0	0	28	27	55
11:00-12:00	19	20	1	1	19	21	40
12:00-13:00	26	23	2	2	28	25	53
13:00-14:00	30	29	2	2	31	31	62
14:00-15:00	27	33	2	2	28	34	63
15:00-16:00	41	31	2	1	43	33	75
16:00-17:00	41	34	3	3	44	37	81
17:00-18:00	**46**	**30**	**10**	**16**	**56**	**46**	**102**
18:00-19:00	52	28	0	5	53	33	85
Daily Trips:	**375**	**390**	**47**	**47**	**422**	**437**	**860**

Table 7: Estimated Trips Generated

Based on this table, the proposed development is expected to generate approximately 860 additional trips per day. Of these, approximately **35 arrivals** and **63 departures** are expected during the A.M. peak (08:00 – 09:00) while approximately **56 arrivals** and **46 departures** are expected in the P.M. peak hour (17:00 – 18:00).

The above traffic has been assigned to the local road network based on an overall consideration of its existing layout combined with surveyed traffic patterns in the study area. The assigned development traffic can be seen in the following as part of *Appendix A*:

- Diagram 10: AM Peak - Trip Generation & Assignment;
- Diagram 11: PM Peak - Trip Generation & Assignment;
- Diagram 12: AADT - Trip Generation & Assignment.

6 PARKING STRATEGY

In developing the car parking provision, consideration has been given to a wide variety of factors including the applicable standards, realistic demand and measures that can be put in place to manage and control parking at the site. Each of these factors is discussed in further detail following.

6.1 PARKING STANDARDS

The following parking standards are applicable to the development:

6.1.1 SUSTAINABLE RESIDENTIAL DEVELOPMENT AND COMPACT SETTLEMENTS GUIDELINES FOR PLANNING AUTHORITIES

This report was published in January 2024, setting out policy and guidance in relation to the planning and development of urban and rural settlements, with a focus on sustainable residential development and the creation of compact settlements.

According to this publication, the availability of car parking significantly influences travel choices for various journeys, including local trips. With continuous investment in active travel and public transport, especially in urban areas like cities and larger towns, more locations are becoming accessible by walking, cycling, or utilising regular public transport connections. Studies indicate that in areas with reduced car parking, individuals are more inclined to opt for walking, cycling, or public transportation for their daily travels. To align with the targets outlined in the National Sustainable Mobility Policy 2022 and the Climate Action Plan 2023, which aim to decrease private car usage, it is essential to adopt a gradual approach to managing car parking in new residential developments.

The guidelines define a number of different types of areas when it comes to car parking. These are *city centres and urban neighbourhoods, accessible locations,* and *intermediate and peripheral locations.* City centres comprise the city core and immediately surrounding neighbourhoods, while urban neighbourhoods are highly accessible locations, usually in close proximity to a High Capacity Public Transport Node or Interchange. Table 3.8 provides the following definitions for the locations:

- **High Capacity Public Transport Node or Interchange:** Lands within 1,000 metres (1km) walking distance of an existing or planned high capacity urban public transport node or interchange, namely an interchange or node that includes DART, high-frequency Commuter Rail, light or MetroLink services; or locations within 500 metres walking distance of an existing or planned BusConnects 'Core Bus Corridor' stop.
- **Accessible Location:** Lands within 500 metres (i.e. up to 5-6 minute walk) of existing or planned high frequency (i.e. 10 minutes peak hour frequency) urban bus services;

- **Intermediate Location:** Lands within 500-1,000 metres (i.e. 10-12 minute walk) of existing or planned high frequency (i.e. 10-minute peak hour frequency) urban bus services and land within 500 meters of a reasonably frequent (minimum 15-minutes peak hour frequency) urban bus services; and
- **Peripheral:** Lands that do not meet the proximity of accessibility criteria detailed above. This includes all lands in Small to Medium Sized Towns and in Rural Towns and Villages.

The site boundary is not within walking distance of a large urban centre. The local bus services 44B & 114 operate during peak hours every 30 minutes respectively and provide connections to nearby urban centres. Neither bus route currently provides connections to the city centre. It is noted that the BusConnects plan for the area includes the introduction of bus services 86, 87, 88 and L33. Although these services will provide connections to the city centre, they are not expected to be "high frequency". The proposed site is located within a 1.9km walk (27 min) from the Luas stop at Glencairn.

Based on this the development can be classified as a *Peripheral* location. Section 5.3.4 states the following in terms of car parking quantum for these locations: *"In intermediate and peripheral locations, defined in Chapter 3 (Table 3.8), the maximum rate of car parking provision for residential development, where such provision is justified to the satisfaction of the planning authority, shall be 2 no. spaces per dwelling."*

Based on this, the allowable maximum car parking quantum for this development is 384 no. spaces. However, it is also further stated that applicants are required to provide a rationale and justification for the number of car parking spaces proposed and to satisfy the planning authority that the parking levels are necessary and appropriate, particularly when they are close to the maximum provision.

Section 5.2.5 of the Compact Settlement Guidelines also states that, in the case of residential units that do not have ground-level open space or have smaller terraces, a general minimum standard of 1 cycle storage space per bedroom should be applied. Visitor cycle parking should also be provided. This means there is a requirement of 440 no. long-stay bicycle parking spaces for the residential portion of the development.

6.1.2 SUSTAINABLE URBAN HOUSING: DESIGN STANDARDS FOR NEW APARTMENTS

The "Sustainable Urban Housing: Design Standards for New Apartments" (July 2023) defines three types of urban areas:

- **Central/Accessible Urban** - Such locations are generally suitable for small- to large-scale (will vary subject to location) and higher density development (will also vary), that may wholly comprise apartments including:
  - Sites within walking distance (i.e. up to 15 minutes or 1,000-1,500m), of principal city centres, or significant employment locations, that may include hospitals and third-level institutions;

  - Sites within reasonable walking distance (i.e. up to 10 minutes or 800-1,000m) to/from high-capacity urban public transport stops (such as DART or Luas); and
  - Sites within easy walking distance (i.e. up to 5 minutes or 400-500m) to/from high frequency (i.e. min 10 10-minute peak hour frequency) urban bus services.;
- **Intermediate Urban Locations** - Such locations are generally suitable for smaller-scale (will vary subject to location), higher density development that may wholly comprise apartments, or alternatively, medium-high density residential development of any scale that includes apartments to some extent (will also vary, but broadly >45 dwellings per hectare net), including:
  - Sites within or close to i.e. within reasonable walking distance (i.e. up to 10 minutes or 800-1,000m), of principal town or suburban centres or employment locations, that may include hospitals and third-level institutions;
  - Sites within walking distance (i.e. between 10-15 minutes or 1,000-1,500m) of high-capacity urban public transport stops (such as DART, commuter rail or Luas) or within reasonable walking distance (i.e. between 5-10 minutes or up to 1,000m) of high frequency (i.e. min 10 minute peak hour frequency) urban bus services or where such services can be provided;
  - Sites within easy walking distance (i.e. up to 5 minutes or 400-500m) of reasonably frequent (min 15 15-minute peak hour frequency) urban bus services.;
- **Peripheral/Less Accessible Urban Locations** - Such locations are generally suitable for limited, very small-scale (will vary subject to location), higher density development that may wholly comprise apartments or residential development of any scale that will include a minority of apartments at low-medium densities (will also vary, but broadly <45 dwellings per hectare net), including:
  - Sites in suburban development areas that do not meet proximity or accessibility criteria;
  - Sites in small towns or villages.

The site boundary is not within walking distance of a large urban centre. The local bus services 44B & 114 operate during peak hours every 30 minutes respectively and provide connections to nearby urban centres. Neither bus route currently provides connections to the city centre. It is noted that the BusConnects plan for the area includes the introduction of bus services 86, 87, 88 and L33. Although these services will provide connections to the city centre, they are not expected to be "high frequency". The proposed site is located within a 1.9km walk (27 min) from the Luas stop at Glencairn.

The Blackglen site is within 1900m of the Luas line which is outside of the specific 1500m range for intermediate urban locations. As such, the development is classified as a *less accessible urban location*.

The standards state that for development in these locations, there is a requirement of one car parking space per unit together with an element of visitor parking of one space per 4 apartments. Applying this standard to the quantum of apartments yields the following requirement:

- 178 no. car parking spaces; and
- 45 no. visitor parking spaces.

This equates to a total of 223 no. car parking spaces for the apartment component of the development.
In terms of bicycle parking, the standard is as follows:

- 1 no. bicycle space per bedroom; and
- 1 no. visitor space per 2 residential units.

This equates to a total of 536 no. bicycle parking spaces for the apartment component of the development.

6.1.3 DLR DEVELOPMENT PLAN 2022 - 2028

The Dun Laoghaire Rathdown Development 2022 – 2028, Chapter 12, states that the required parking is based on the location of the development. Four parking zones are defined:

- Parking Zone 1: Comprises the Major Town Centre areas of Dún Laoghaire and Dundrum together with the Blackrock District Centre area;
- Parking Zone 2: This zone generally includes areas, which are within specified walking bands/catchments;
- Parking Zone 3: This zone generally comprises the remainder of the County, excluding rural areas;
- Parking Zone 4: This zone comprises the rural areas within the County.

As part of the development plan, a supplementary map is provided (Map T2) which shows the Parking Zones. From this map, it is shown that the development will be located within Zone 3.

The criteria for Apartments and Houses for Zone 3 state:

- 1 space per 1-bed unit,
- 1 space per 2-bed unit,
- 2 spaces per 3+ bed unit, and
- 1 space per 10 apartments.

The development consists of the following split between apartments:

- 33 no. 1-bed units;
- 84 no. 2-bed units;
- 61 no. 3-bed units; and
- 14 no. 4-bed units.

Based on the above, there is a requirement for 285 car parking spaces for the residential component of the development. It is noted that these parking standards represent a maximum.

In addition, there is a requirement of 1 parking space per 40m^2 for the creche. This would equate to a further requirement of 10 no. car parking spaces for this aspect.

Thus, to be in line with the latest Development Plan Standards, a total of 295 no. car parking spaces would be required.

6.1.4 DLRCC STANDARDS FOR CYCLE PARKING AND ASSOCIATED CYCLING FACILITIES FOR NEW DEVELOPMENTS – JANUARY 2018

DLRCC has its own standard for cycle parking for new developments which was published in January 2018. The following standards, as noted in Table 4.1 of the document, are applicable to new residential developments:

- Apartments: 1 long stay space per unit/1 short stay space per 5 units;
- Houses 3+ beds: 1 long stay space per unit/1 short stay space per 5 units; and
- Creche: 1 long stay space per 5 staff/1 short stay space per 10 children.

Based on the above, the bicycle parking requirement for the residential portion of the development is 231, which comprises:

- 178 long-stay spaces for apartments;
- 36 short-stay spaces for apartments;
- 14 long-stay spaces for houses; and
- 3 short stay spaces for houses.

6.2 PARKING PROVISION

Since the main component of this development consists of apartments, it is proposed to make use of the requirements of the *Sustainable Urban Housing: Design Standards for New Apartments (July 2023)* guidelines. However, this is only applicable to apartments which means that the remainder of the development's car parking requirements should be based on the development plan. Using this *hybrid* between the standards results in the car parking requirement and provision as per the table overleaf.

It should be noted that the Stage 2 LRD Opinion Report states that, *"given the Compact Settlement Guidelines which require that car parking rations should be reduced at all urban locations, Transportation Planning consider that the Applicant should consider reducing the car parking provision."* In light of this, it was deemed approriate to further reduce car parking by reducing the provision for the housing component from 28 no. units to 22 no. units, for a ratio of 1.6 rather than 2 space per unit.

Table 8: Car Parking Provision

Requirement	Relevant Standard	Standard	Dev	Requirement	Provision
Apartment 1 bed	Apartment Guidelines	1 space per unit	33 units	33	33
Apartment 2 bed	Apartment Guidelines	1 space per unit	84 units	84	84
Apartment 3+ bed	Apartment Guidelines	1 space per unit	61 units	61	61
Houses	DLR Development Plan	2 spaces per unit	14 units	28	22
Apartment Visitors	DLR Development Plan	1 space per 10 units	178 apts	18	18
Creche	DLR Development Plan	1 space per 40sqm	400sqm	10	10
Total				**234**	**226**

Based on ths above, it is proposed to provide a total of 226 no. car parking spaces at the development. This includes 198 no. long-stay spaces for residential, 18 no. spaces for visitors and 10 no. spaces for the creche. It also includes 12 no. accessible spaces at a ratio of 5%. This quantum is below the maximum allowable provision as per the Compact Settlement Guidelines and thus conforms to the requirement of substantially reducing the provision. This can be further motivated by the provision being below the maximum of 295 no. spaces prescribed in the development plan.

It is submitted that this provision is wholly realistic and appropriate for the type and location of the development due to the following reasons:

- While the development is not within in prescribed 1,500m distance from high capacity urban public transport (LUAS) to be classified as an intermediate urban location, it is within 1,900m which is just outside of the range and will still provide good access to this service and promote rail usage as a viable alternative mode to private car use.
- There are a number of highly accessible bus stops along Blackglen Road which provide connections to the following nearby urban centres. Dublin Bus 44b provides a connection between the Dundrum Luas Station, Dundrum, Sandyford and Glencullen. Go Ahead service 114 provides access to Blackrock Station, Stillorgan Road, Ravenscourt Park and Rockview. These accessible bus services will promote bus use as a viable alternative to private car use, further shifting the modal share to sustainable travel.
- The Blackglen Road Improvement Scheme has provided high-quality walking and cycling infrastructure on the development's frontage which ties in with the wider network, further increasing accessibility and connectivity.
- As noted previously, the Stage 2 LRD Opinion Report states that, *"given the Compact Settlement Guidelines which require that car parking rations should be reduced at all urban locations, Transportation Planning consider that the Applicant should consider reducing the car parking provision."*

In addition to the above, the development will also provide:

- 12 no. accessible spaces (5% of car parking spaces);
- 9 no. motorcycle spaces (4 spaces per 100 car parking spaces);

- 47 no. EV spaces (1 space per 5 car parking spaces); and
- 2 no. car club spaces.

In terms of bicycle parking, it is proposed to provide the following:

Table 9: Bicycle Parking Provision

Requirement	Relevant Standard	Standard	Dev	Long-Stay	Short-Stay
1 Bed	Compact Settlement	1 space per bedroom	33	33	N/A
2 Bed	Compact Settlement	1 space per bedroom	84	168	N/A
3 Bed	Compact Settlement	1 space per bedroom	61	183	N/A
4 Bed	Compact Settlement	1 space per bedroom	14	56	N/A
Visitor	DLR Standards	1 space per 5 units	192	N/A	38
Creche - Long Stay	DLR Standards	1 space per 5 staff	9	2	N/A
Creche - Short Stay	DLR Standards	1 space per 10 children	43	N/A	4
Total				**442**	**42**

This exceeds the DLRCC requirements which will aid in promoting active travel as a viable alternative to private car use.

7 POTENTIAL IMPACT OF DEVELOPMENT CONSTRUCTION

The potential impact of development construction is detailed below. For more information on the specific details of construction, please refer to the Outline Construction Management Plan, submitted under separate cover.

7.1 CONSTRUCTION TRAFFIC MANAGEMENT PLAN

Prior to the commencement of the works on site, the contractor is to prepare a detailed Construction Traffic Management Plan which is to be agreed upon with the Local Planning Authority. The Construction Traffic Management Plan shall be prepared for the site works in accordance with the principles outlined in the following guidance documents;

- Department of Transport Traffic Signs Manual 2010 – Chapter 8 Temporary Traffic Measures and Signs for Roadworks;
- Department of Transport Guidance for the Control and Management of Traffic at Road Works (2010);
- Any additional requirements detailed in the Design Manual for Roads and Bridges (DMRB) & Design Manual for Urban Roads & Streets; and
- Directions for the Control & Management of Roadworks in Dublin City.

7.2 CONSTRUCTION TRAFFIC VOLUMES

Relative to the operation stage, the construction period will be temporary in nature. Construction traffic is expected to consist of the following categories:

- Private vehicles owned and driven by site construction staff and by full-time site supervisory staff and occasional professional supervisory staff i.e. design team members and supervisory staff from utility companies;
- Materials delivery and removal vehicles.

It is difficult to assess the exact quantum of traffic that will be generated during the construction period as it will vary throughout the construction process as different activities have different associated transportation needs. However, the following points are noted with regard to construction traffic:

- The construction day will begin and end outside of peak travel hours. As a result, the majority of workers travelling to and from the site will arrive before the a.m. peak hour and depart after the p.m. peak hour;
- On-site parking will be provided for use by critical staff only with the remainder of staff encouraged to travel by the numerous public transport options serving the locality;

- Adequate compounding will be provided to prevent any potential overflow onto the local transport network;
- The potential for construction staff to be brought to the site in vans/minibuses will be investigated;
- Excavation and materials delivery vehicles travelling to and from the site will be spread across the course of the working day meaning the number of HGVs travelling during the peak hours will be relatively low.

Based on experience from similar sites, it is estimated that up to 150-200 construction personnel may be on site when the project advances to peak operating conditions. Promotion of travel to the site by public transport will be promoted. On-site parking provisions will be restricted to 40-50 car parking spaces for the transport of essential construction equipment and tools that are not suitable for public transport. The estimated peak construction vehicle movements are shown in the table below.

Construction Activity	Estimated Daily Peak One-Way Truck Movements
Bulk Excavation	70-100
Large Concrete Pours	100-150

Table 10: Estimate of Peak Construction Vehicle Movements

Material deliveries and collections from the site shall be planned, scheduled, and staggered to avoid any unnecessary build-up of construction works-related traffic.

Overall, it is expected that the level of traffic generated by the construction works will be out of peak traffic hours and therefore have a negligible impact on the surrounding road network. This stage of the development will be considered in more detail in the final Construction Management Plan which will be compiled before the start of construction by the appointed contractor in conjunction with the Local Authority, giving details on the following:

- Daily and weekly working hours;
- Agreed haul routes for incoming materials;
- Licensed hauliers to be used;
- Disposal sites;
- Travel arrangements for construction personnel;
- Appropriate on-site parking for construction personnel to prevent overspill on the local road network;
- Temporary construction entrances to be provided;
- Wheel wash facilities if required;
- Road cleaning and sweeping measures to be put in place if required;
- Temporary construction signage to be put in place and maintained;
- Any proposed traffic management measures such as temporary traffic lights and signage on any public roads.

8 POTENTIAL IMPACT OF DEVELOPMENT OPERATION

8.1 LINK CAPACITIES

TA 79/99 "Traffic Capacity of Urban Roads" from the DMRB provides information on the capacity of urban roads based on classification and width. The table following shows the capacities of various road types based on this manual and using a 60:40 split in flow.

Table 11: Urban Road Capacities

Carriageway Width (m)		Two-Way Single Carriageway – Busiest Direction Flow (Assumes a 60/40 directional split)									Dual Carriageway			
		Total number of Lanes									Number of Lanes in each direction			
		2				2-3	3	3-4	4	4+	2		3	4
		6.10	6.75	7.30	9.0	10.0	12.3	13.5	14.6	18.0	6.75	7.3	11.0	14.6
Road Type	UM	Not Applicable										4000	5600	7200
	UAP1	1020	1320	1590	1860	2010	2550	2800	3050	3300	3350	3600	5200	-
	UAP2	1020	1260	1470	1550	1650	1700	1900	2100	2700	2950	3200	4800	-
	UAP3	900	1110	1300	1530	1620	-	-	-	-	2300	2600	3300	-
	UAP4	750	900	1140	1320	1410	-	-	-	-	-	-	-	-

The local links have been classified based on the associated definitions in the DMRB. Using the previous table, link capacities have been calculated and current Ratio of Flow to Capacity (RFC) values have been assessed for the key links bordering the site.

It should be noted that given the variation in width across the links in question, an average figure for each has been used which is rounded down to the nearest value shown in the above table, thus ensuring a conservative assessment of link capacity.

8.1.1 BASE YEAR (2024)

The Base Year RFC value for the links within the study area is shown in the table below.

Table 12: Base Year Link RFC Values for Local Network

Link	Width (m)	Link Capacity	A.M. Peak	RFC	P.M. Peak	RFC
		(veh/hr)	(veh/hr)	(%)	(veh/hr)	(%)
Blackglen Road	6.5	1260	430	34%	356	28%
Hillcrest Road	6.0	1020	646	63%	611	60%
R117	6.5	1260	733	58%	762	60%
Kilgobbin Road	9.0	1550	851	55%	583	38%

The link capacities during the base year are sufficient to accommodate the traffic with the highest ratio of flow to capacity occurring in the morning peak period on Hillcrest Road, with a value of 63%.

8.1.2 OPENING YEAR (2029)

The Opening Year Do Something scenario RFC value for the links within the study area is shown in the table below.

Table 13: Opening Year Do Something Link RFC Values for Local Network

Link	Width (m)	Link Capacity	A.M. Peak	RFC	P.M. Peak	RFC
		(veh/hr)	(veh/hr)	(%)	(veh/hr)	(%)
Blackglen Road	6.5	1260	525	42%	457	36%
Hillcrest Road	6.0	1020	753	74%	742	73%
R117	6.5	1260	854	68%	915	73%
Kilgobbin Road	9.0	1550	951	61%	700	45%

The link capacities during the base year are sufficient to accommodate the traffic with the highest ratio of flow to capacity occurring in the morning peak period on Hillcrest Road, with a value of 73%.

8.1.3 DESIGN YEAR (2044)

The Design Year Do Something scenario RFC value for the links within the study area is shown in the table below.

Table 14: Design Year Do Something Link RFC Values for Local Network

Link	Width (m)	Link Capacity	A.M. Peak	RFC	P.M. Peak	RFC
		(veh/hr)	(veh/hr)	(%)	(veh/hr)	(%)
Blackglen Road	6.5	1260	575	46%	496	39%
Hillcrest Road	6.0	1020	829	81%	813	80%
R117	6.5	1260	940	75%	1003	80%
Kilgobbin Road	9.0	1550	1051	68%	767	49%

The link capacities during the base year are sufficient to accommodate the traffic with the highest ratio of flow to capacity occurring in the morning peak period on Hillcrest Road, with a value of 80%.

The links around the development will thus provide sufficient capacity for all scenarios.

8.2 JUNCTION CAPACITIES

The following traffic flow diagrams for the Opening Year and Design Year are attached as *Appendix A*:

- Diagram 13: 2029 AM Peak – Do Something.
- Diagram 14: 2029 PM Peak – Do Something.
- Diagram 15: 2029 AADT – Do Something.

- Diagram 16: 2044 AM Peak – Do Something.
- Diagram 17: 2044 PM Peak – Do Something.
- Diagram 18: 2044 AADT – Do Something.

8.2.1 EXISTING JUNCTIONS

Section 12.4.2 of the Dún Laoghaire-Rathdown County Development Plan 2022 – 2028 speaks to the requirements for Traffic and Transport Assessments. This section states that *"the impact of the proposed development on the surrounding environment and transportation network, should be appraised through the submission of a Traffic and Transport Assessment (TTA), in accordance with Transport Infrastructure Ireland*

(TII) 'Traffic and Transport Assessment Guidelines', (2014). The requirements for a TTA should be ascertained at the pre-planning stage."

The aforementioned *Traffic and Transport Assessment Guidelines (TII - May 2014)* specify certain Traffic Management Guidelines Thresholds for Transport Assessments. These are:

- Traffic to and from the proposed development exceeds 10% of the traffic flow on the adjoining road;
- Traffic to and from the proposed development exceeds 5% of the traffic flow on the adjoining road where congestion exists;
- Residential development in excess of 200 dwellings;
- Retail and leisure development in excess of 1,000 sq.m;
- Office, education and hospital development in excess of 2,500 sq.m;
- Industrial development in excess of 5,000 sq.m; and
- Distribution and warehousing in excess of 10,000 sq.m.

While the development does not exceed 200 dwellings, a TTA was deemed necessary at the pre-planning stage. Following this requirement, of particular interest from the above thresholds are Thresholds 1 and 2. These specify at which point junctions need to be analysed. To ascertain which junctions experience congestion, the queue length surveys were consulted. The table below shows the average queue length at each junction for the two peak hours.

Table 15: Average Queue Lengths per Junction

Junction	Peak Hour	
	AM	PM
Junction 1	7	8
Junction 2	1	0
Junction 3	0	0
Junction 4	7	7
Junction 5	6	6

From the above table, it is evident that the queues at Junctions 2 and 3 are very short. As such it can be argued that these junctions do not experience congestion. The queues at Junctions 1, 4 and 5 are slightly longer with average queues of 6-8 vehicles. Although this does not indicate significant congestion, to ensure a robust and conservative assessment, it is assumed that these junctions do experience congestion.

To determine the impact of the development trips on each junction, the generated and distributed trips are compared to the base volumes at each junction obtained from the surveys. This comparison is shown in the table overleaf.

Table 16: Junction Impact

	AM			PM			Requires Analysis
	2024 DN	Dev Trips	% Impact	2024 DN	Dev Trips	% Impact	
Junction 1	938.2	22	2.35%	978.7	23	2.36%	No
Junction 2	495.9	25	5.13%	556.9	26	4.64%	No
Junction 3	677.7	27	3.94%	630.2	27	4.27%	No
Junction 4	1633.7	71	4.35%	1518.5	75	4.91%	No
Junction 5	1918.6	40	2.06%	1834.7	45	2.43%	No

The above table indicates that the development will have less than 5% impact on all the surveyed junctions, except for Junction 2 where the impact is slightly above 5%. However, as noted previously this junction does not experience congestion. As such, the 10% criterion is applicable. Based on the above none of the surveyed junctions require detailed analysis as the impact of the development trips can be considered negligible.

8.2.2 ACCESS JUNCTION

The layout for the proposed access junction along Blackglen Road is a simple priority T-junction, with Blackglen Road acting as the main road in an east-west direction, and the development access joining as the southern approach and acting as the minor road.

The junction was analysed using *Junctions 9*, with the worst-performing movement at each approach, for each scenario shown in the table below. The performance of the approaches is measured in Ratio-of-Flow-to-Capacity (RFC) which indicates the demand required vs. the capacity provided. The queue lengths are measured in Passenger-Car-Units (PCU).

Table 17: Access Junction Analysis Results

Peak	Scenario		Year	Blackglen Road (E)		Development Access (S)		Blackglen Road (W)	
				Queue	RFC	Queue	RFC	Queue	RFC
AM	3	DS	2029	N/A	N/A	0.2	16%	0.0	2%
	5	DS	2044	N/A	N/A	0.2	16%	0.0	3%
Peak	Scenario		Year	Blackglen Road (E)		Development Access (S)		Blackglen Road (W)	
				Queue	RFC	Queue	RFC	Queue	RFC
PM	8	DS	2029	N/A	N/A	0.1	12%	0.0	3%
	10	DS	2044	N/A	N/A	0.1	12%	0.0	4%

The results from the access junction analysis indicate that the RFC values are very low with very short queues on all approaches. The right turn into the development along Blackglen Road will not cause any undue delays for through traffic. This means that the proposed access junction layout is sufficient to cater to the demand.

8.2.3 CONTROLLED CROSSING

As mentioned in Section 5.2, it is proposed to include a controlled crossing across Blackglen Road, just east of the access, in line with TL607 of the Cycle Design Manual. In order to ensure this crossing facility can be accommodated, an analysis was done using *Transyt 15*. The analysis includes one activation of the pedestrian phase per cycle, which in reality will not occur due to crossing demand in this area. However, to ensure a conservative and robust analysis, this operationally was applied. The performance of the approaches is measured in Degree of Saturation (DoS) which indicates the demand required vs. the capacity provided. The queue lengths are measured in Passenger-Car-Units (PCU).

Table 18: Controlled Crossing Analysis Results

Peak	Scenario		Year	Blackglen Road (E)		Blackglen Road (W)	
				Queue	DoS	Queue	DoS
AM	3	DS	2029	0.56	17%	1.06	27%
	5	DS	2044	0.63	18%	1.19	30%
Peak	**Scenario**		**Year**	Blackglen Road (E)		Blackglen Road (W)	
				Queue	**DoS**	**Queue**	**DoS**
PM	8	DS	2029	0.80	23%	0.58	17%
	10	DS	2044	0.91	26%	0.65	19%

The above results indicate that the controlled crossing will not have any negative impact on the vehicular flows along Blackglen Road, with queues of approximately 0.5 to 1.0 PCUs and DoS values also within acceptable ranges.

9 SUMMARY & CONCLUSIONS

The previous chapter illustrates the results from the link and junction capacity analysis. Based on this, the following conclusions can be drawn:

- All the links will have sufficient capacity to accommodate the demand generated by the development. Even up to the Design Year scenario.
- Three of the five surveyed junctions have been assumed to experience congestion, based on the queue length surveys conducted. However, in reality, the queues are between 6-8 vehicles which does not indicate significant congestion.
- None of the surveyed junctions requires detailed analysis, as the estimated impact of the development trips on these junctions can be considered negligible, as per the thresholds provided by TII in the *Traffic and Transportation Guidelines 2014.*
- The access junction will operate with significant reserve capacity with the proposed layout and method of control.
- The proposed controlled crossing will not have any negative impact on the vehicular flows along Blackglen Road if implemented.

Based on the above conclusions, no remedial or mitigation measures are required from a traffic and transportation point of view for the development, and as such none are proposed.

For proposals on reducing dependency on private car use, and promoting more sustainable travel options, please refer to the Mobility Management Plan submitted under separate cover as part of the application.

10 VERIFICATION

This report was compiled and verified by:

Wian Marais BEng (Civil), BEng Hons (Transportation), CEng MIEI
Chartered Civil Engineer
O'Connor Sutton Cronin & Associates

Appendix A TRAFFIC FLOW DIAGRAMS

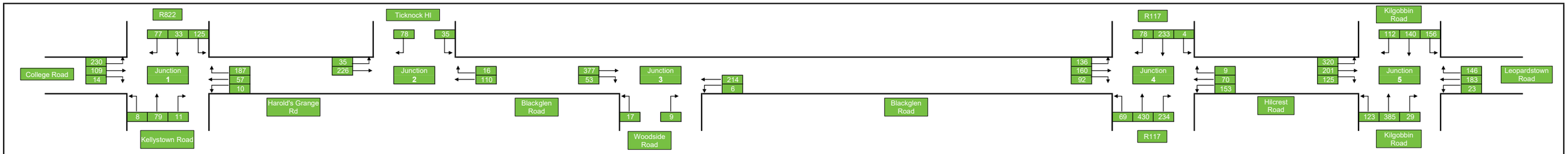

OCSC

O'CONNOR · SUTTON · CRONIN

MULTIDISCIPLINARY CONSULTING ENGINEERS

Project:	Z040		Blackglen Road LRD	
Diagram:	No.	Year	Period	Scenario
	1	2024	AM	Do Nothing

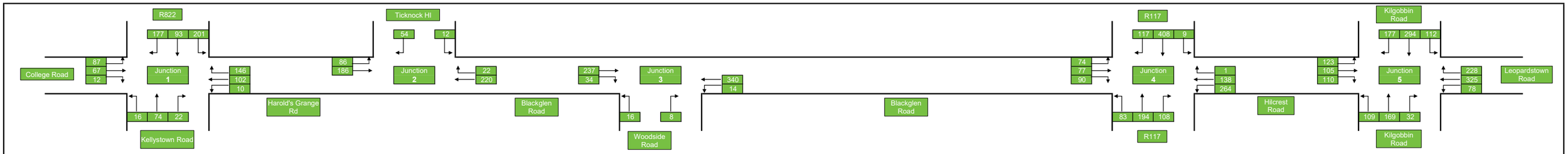

OCSC

O'CONNOR · SUTTON · CRONIN

MULTIDISCIPLINARY CONSULTING ENGINEERS

Project:	Z040		Blackglen Road LRD	
Diagram:	No.	Year	Period	Scenario
	2	2024	PM	Do Nothing

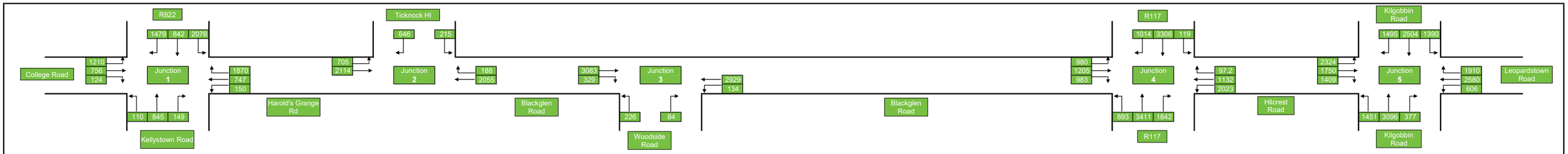

OCSC

O'CONNOR · SUTTON · CRONIN

MULTIDISCIPLINARY CONSULTING ENGINEERS

Project:	Z040		Blackglen Road LRD	
Diagram:	No.	Year	Period	Scenario
	3	2024	AADT	Do Nothing

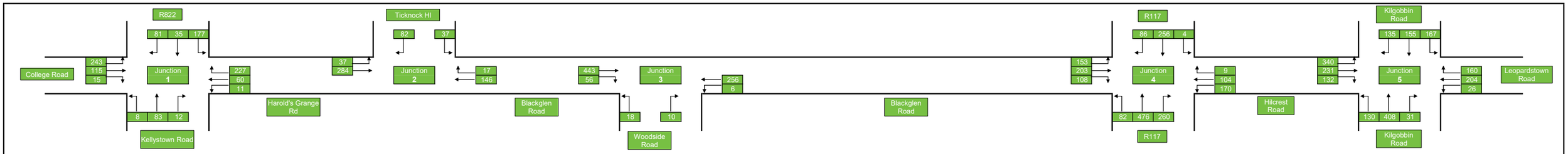

OCSC

O'CONNOR · SUTTON · CRONIN

MULTIDISCIPLINARY CONSULTING ENGINEERS

Project:	Z040		Blackglen Road LRD	
Diagram:	No.	Year	Period	Scenario
	4	2027	AM	Do Nothing

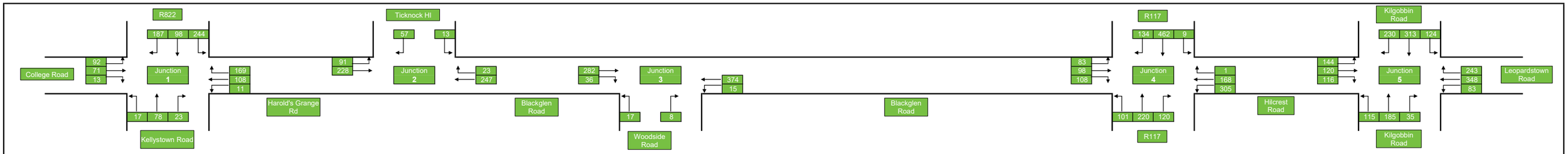

OCSC

O'CONNOR · SUTTON · CRONIN

MULTIDISCIPLINARY CONSULTING ENGINEERS

Project:	Z040		Blackglen Road LRD	
Diagram:	No.	Year	Period	Scenario
	5	2027	PM	Do Nothing

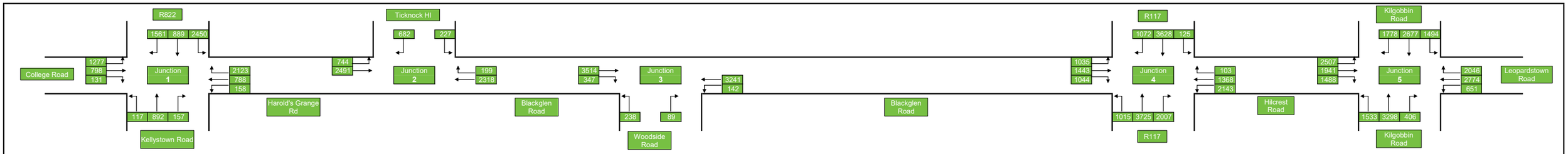

OCSC

O'CONNOR · SUTTON · CRONIN

MULTIDISCIPLINARY CONSULTING ENGINEERS

Project:	Z040		Blackglen Road LRD	
Diagram:	No.	Year	Period	Scenario
	6	2027	AADT	Do Nothing

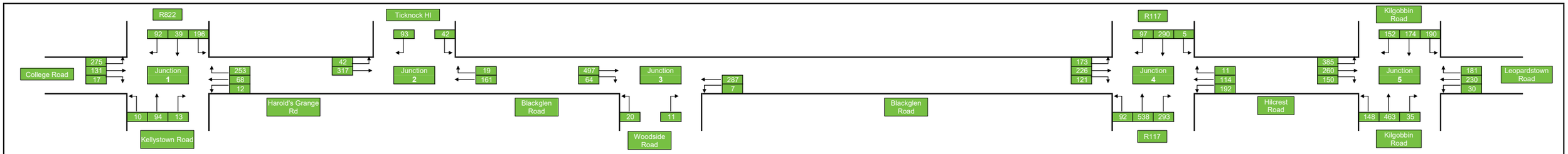

O'CONNOR · SUTTON · CRONIN
MULTIDISCIPLINARY CONSULTING ENGINEERS

Project: Z040 Blackglen Road LRD

Diagram:	No.	Year	Period	Scenario
	7	2042	AM	Do Nothing

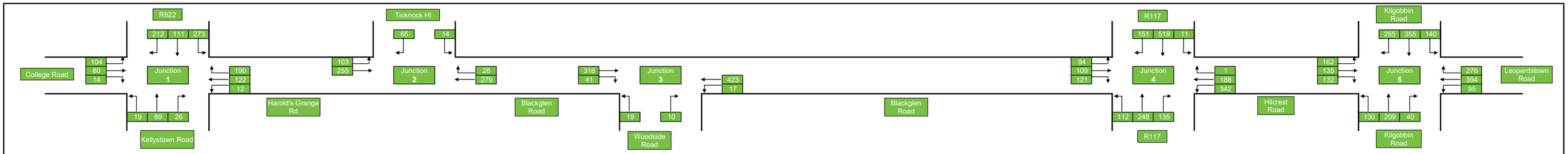

OCSC

O'CONNOR · SUTTON · CRONIN

MULTIDISCIPLINARY CONSULTING ENGINEERS

Project:	Z040		Blackglen Road LRD	
Diagram:	No.	Year	Period	Scenario
	8	2042	PM	Do Nothing

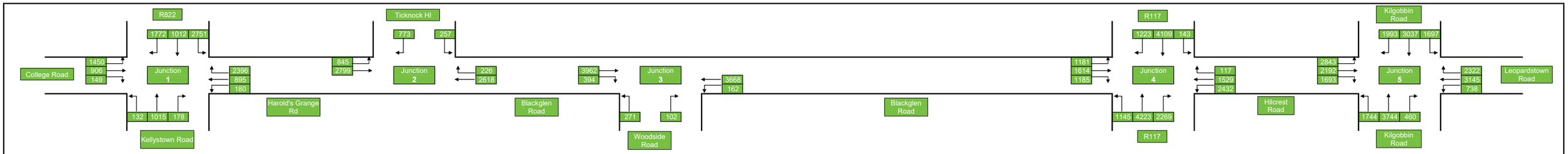

OCSC

O'CONNOR · SUTTON · CRONIN

MULTIDISCIPLINARY CONSULTING ENGINEERS

Project:	Z040		Blackglen Road LRD	
Diagram:	No.	Year	Period	Scenario
	9	2042	AADT	Do Nothing

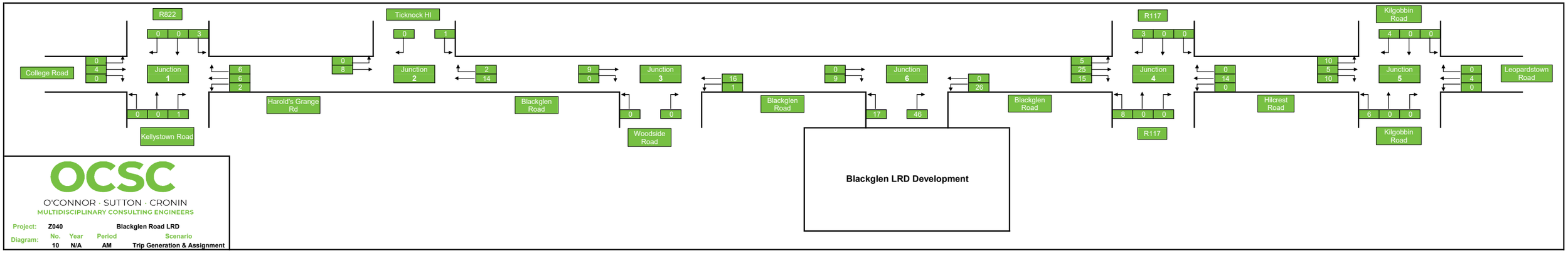

O'CONNOR · SUTTON · CRONIN
MULTIDISCIPLINARY CONSULTING ENGINEERS

Project:	Z040		Blackglen Road LRD	
Diagram:	No.	Year	Period	Scenario
	10	N/A	AM	Trip Generation & Assignment

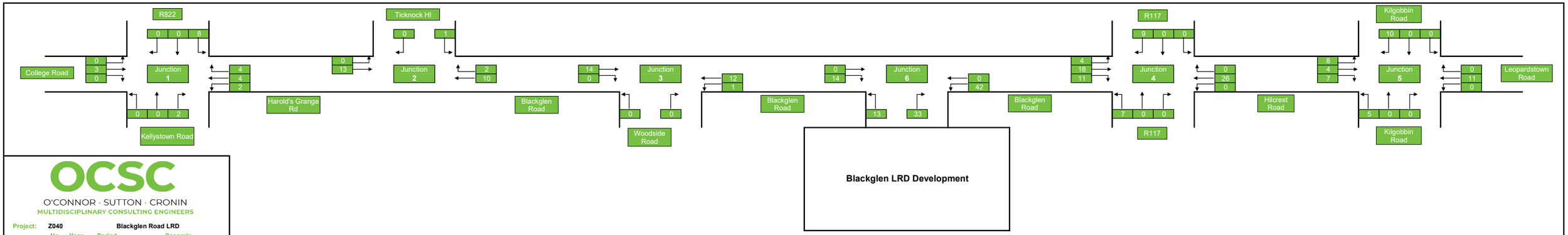

O'CONNOR · SUTTON · CRONIN
MULTIDISCIPLINARY CONSULTING ENGINEERS

Project:	Z040		Blackglen Road LRD	
Diagram:	No.	Year	Period	Scenario
	11	N/A	PM	Trip Generation & Assignment

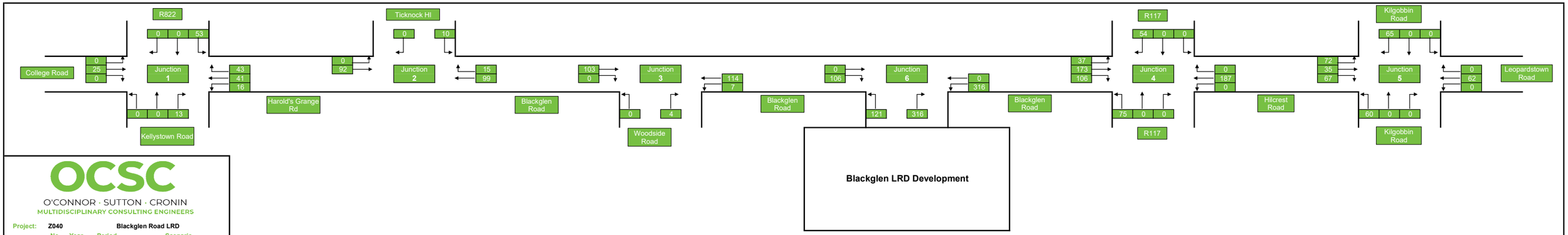

OCSC

O'CONNOR · SUTTON · CRONIN

MULTIDISCIPLINARY CONSULTING ENGINEERS

Project:	Z040		Blackglen Road LRD	
Diagram:	No.	Year	Period	Scenario
	12	N/A	AADT	Trip Generation & Assignment

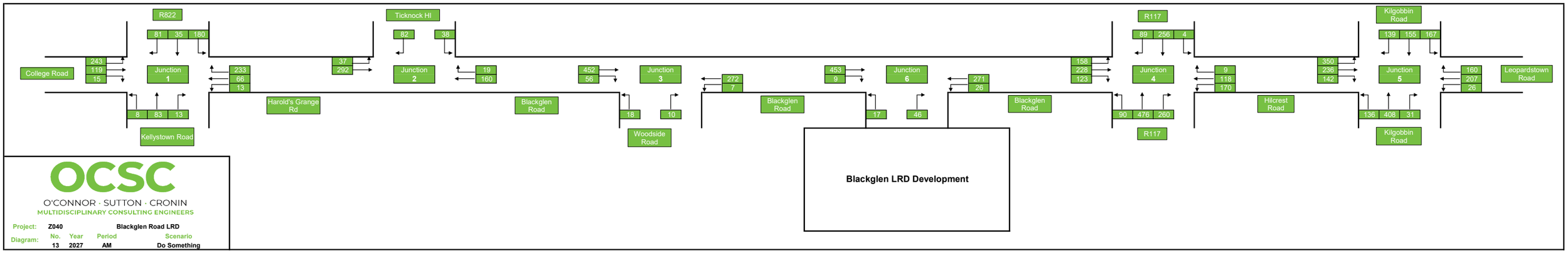

OCSC

O'CONNOR · SUTTON · CRONIN

MULTIDISCIPLINARY CONSULTING ENGINEERS

Project:	Z040	Blackglen Road LRD		
Diagram:	No.	Year	Period	Scenario
	13	2027	AM	Do Something

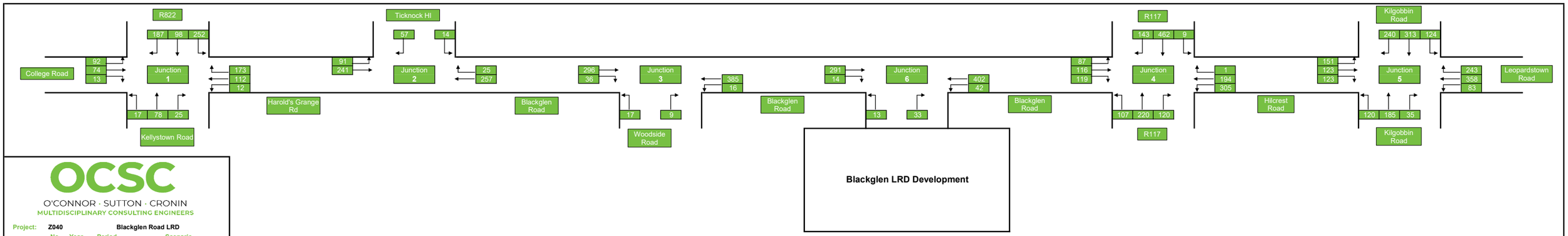

OCSC

O'CONNOR · SUTTON · CRONIN

MULTIDISCIPLINARY CONSULTING ENGINEERS

Project:	Z040		Blackglen Road LRD	
Diagram:	No.	Year	Period	Scenario
	14	2027	PM	Do Something

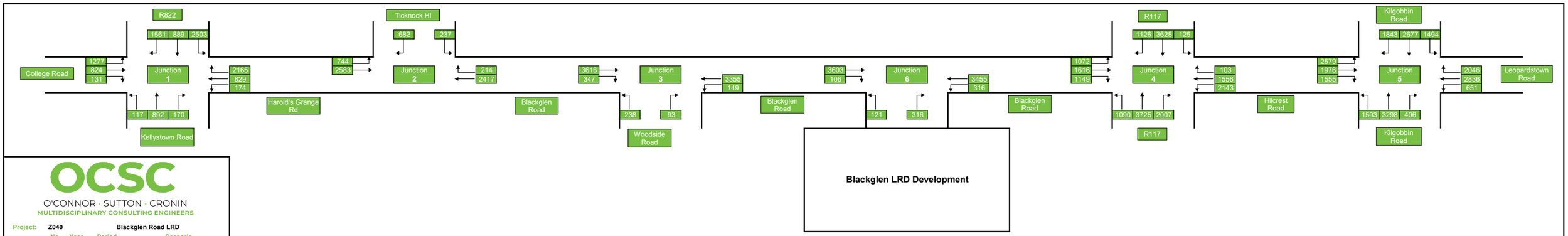

OCSC

O'CONNOR · SUTTON · CRONIN

MULTIDISCIPLINARY CONSULTING ENGINEERS

Project:	Z040	Blackglen Road LRD		
Diagram:	No.	Year	Period	Scenario
	15	2027	AADT	Do Something

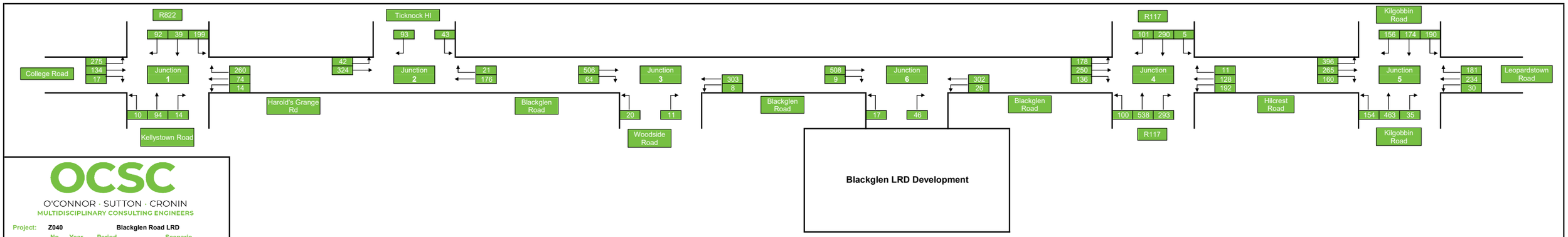

OCSC

O'CONNOR · SUTTON · CRONIN

MULTIDISCIPLINARY CONSULTING ENGINEERS

Project:	Z040	Blackglen Road LRD		
Diagram:	No.	Year	Period	Scenario
	16	2042	AM	Do Something

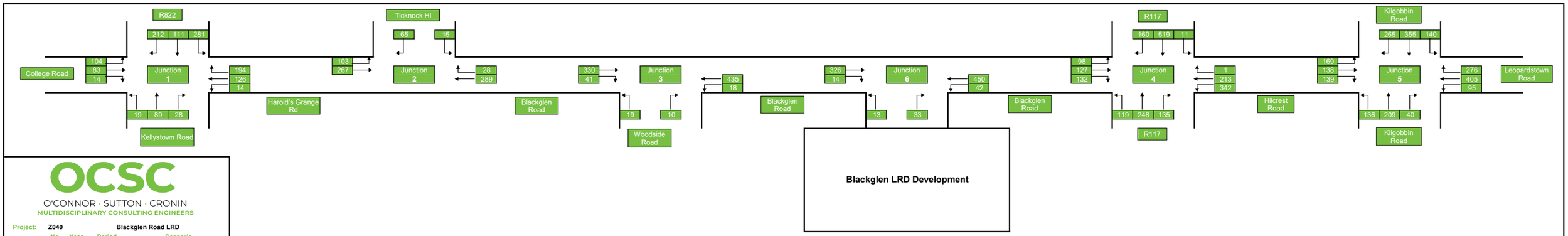

OCSC

O'CONNOR · SUTTON · CRONIN

MULTIDISCIPLINARY CONSULTING ENGINEERS

Project:	Z040		Blackglen Road LRD
Diagram:	No.	Year	Period	Scenario
	17	2042	PM	Do Something

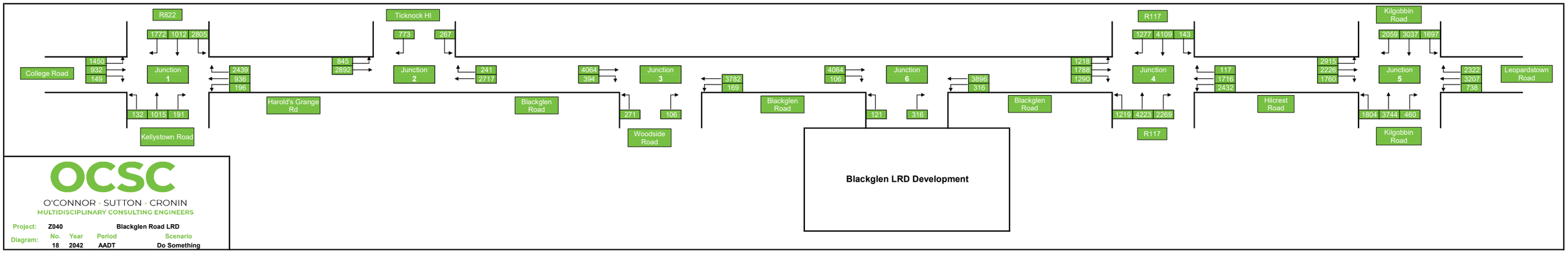

OCSC

O'CONNOR · SUTTON · CRONIN

MULTIDISCIPLINARY CONSULTING ENGINEERS

Project:	Z040		Blackglen Road LRD
Diagram:	No.	Year	Period	Scenario
	18	2042	AADT	Do Something

Appendix B TRAFFIC SURVEY DATA

15320 / Blackglen Dublin 18
April 2024
General Location Plan

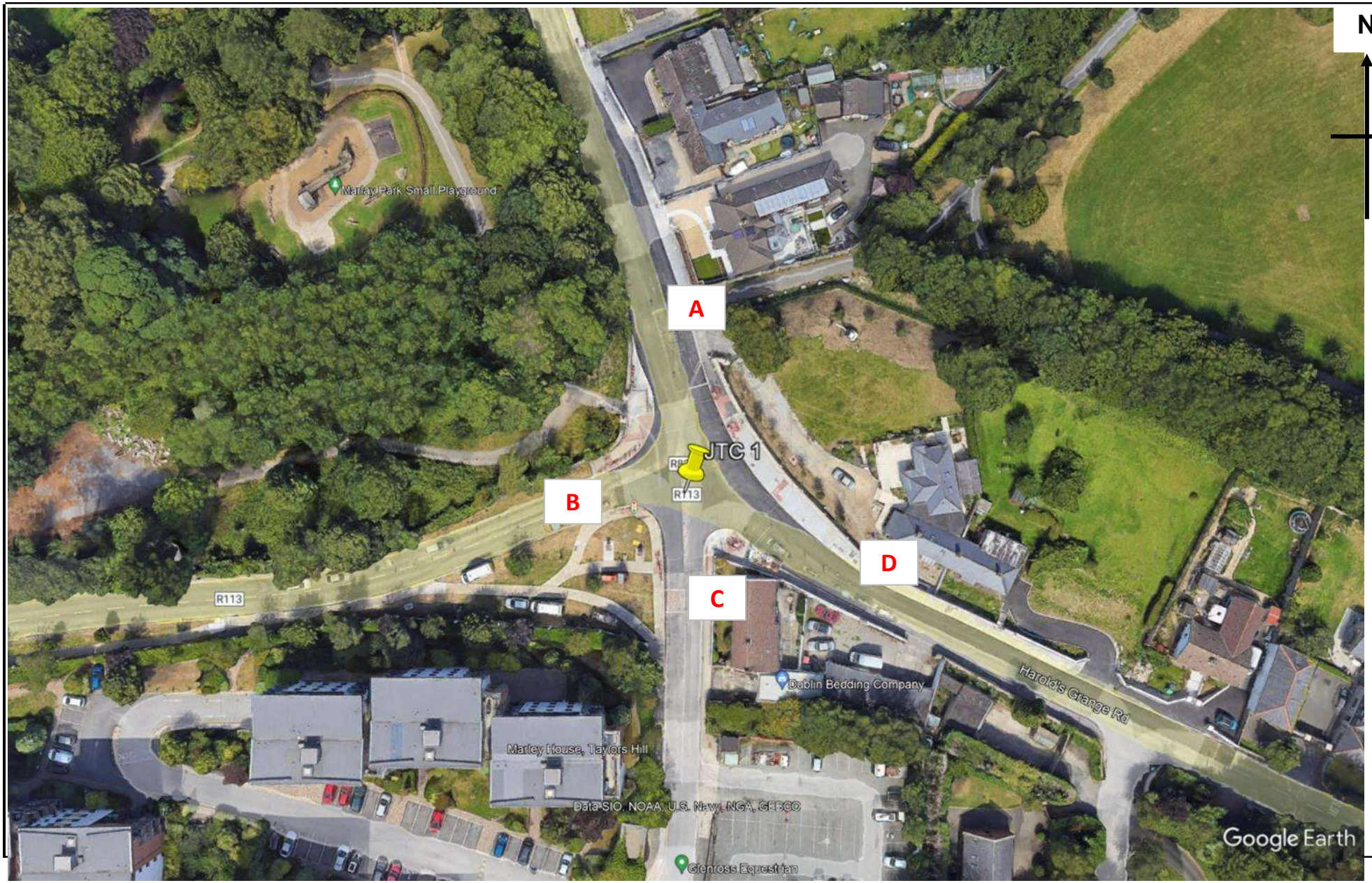

15320 / Blackglen Dublin 18
April 2024
General Location Plan

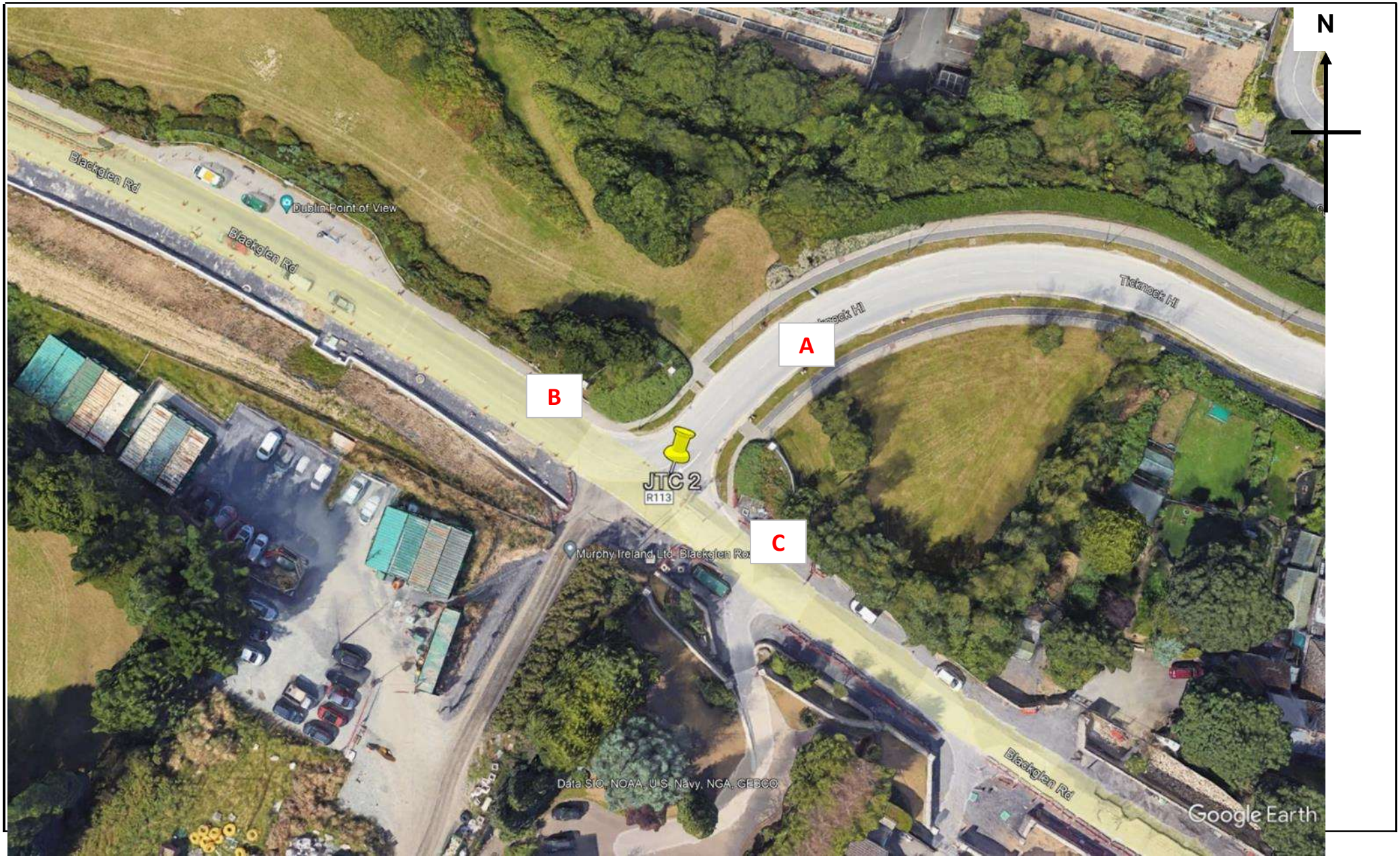

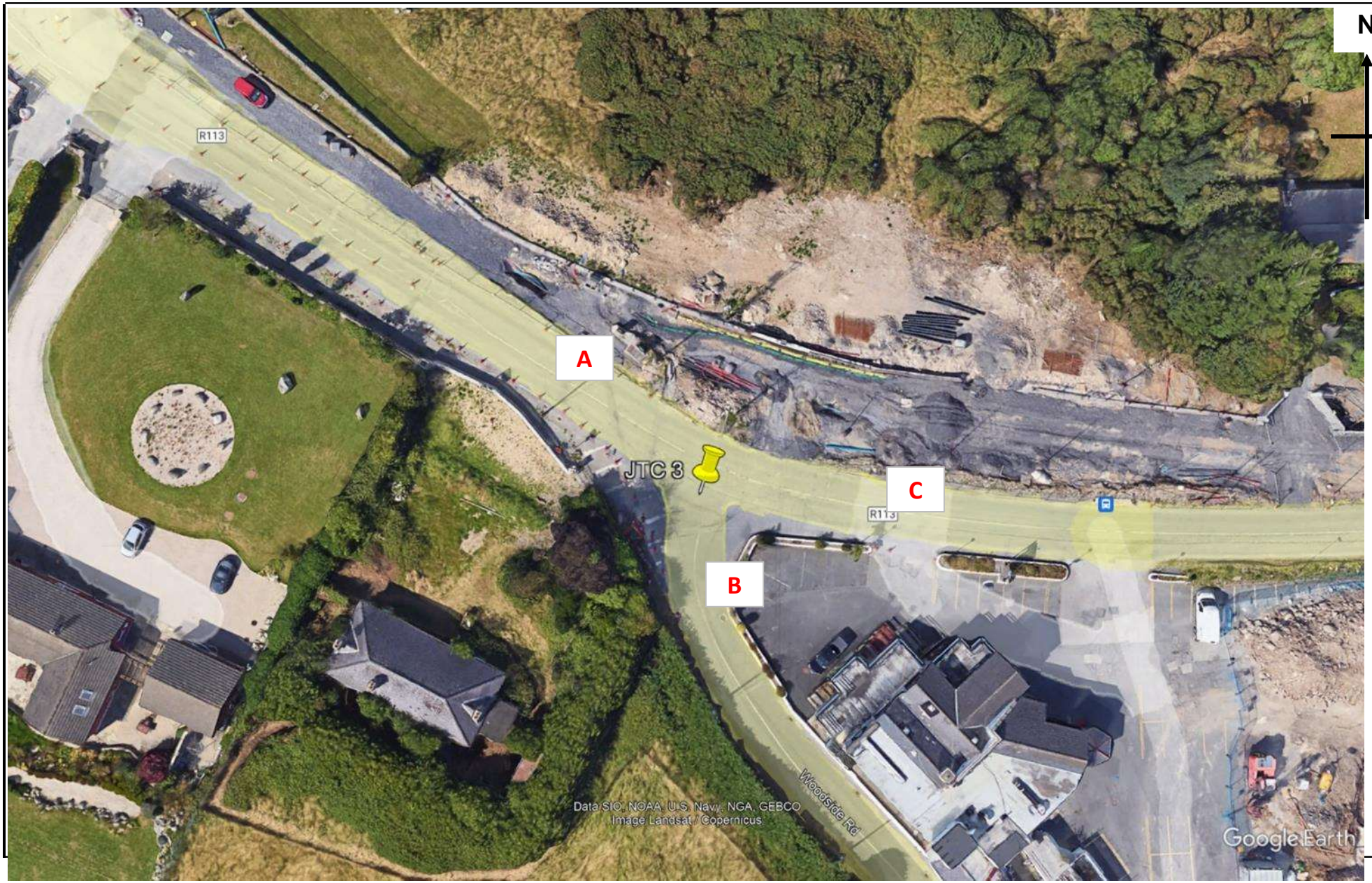
N
A
B
C
JTC 3
R113
R113
Woodside Rd
Data SIO, NOAA, U.S. Navy, NGA, GEBCO
Image Landsat / Copernicus
Google Earth

15320 / Blackglen Dublin 18
April 2024
General Location Plan

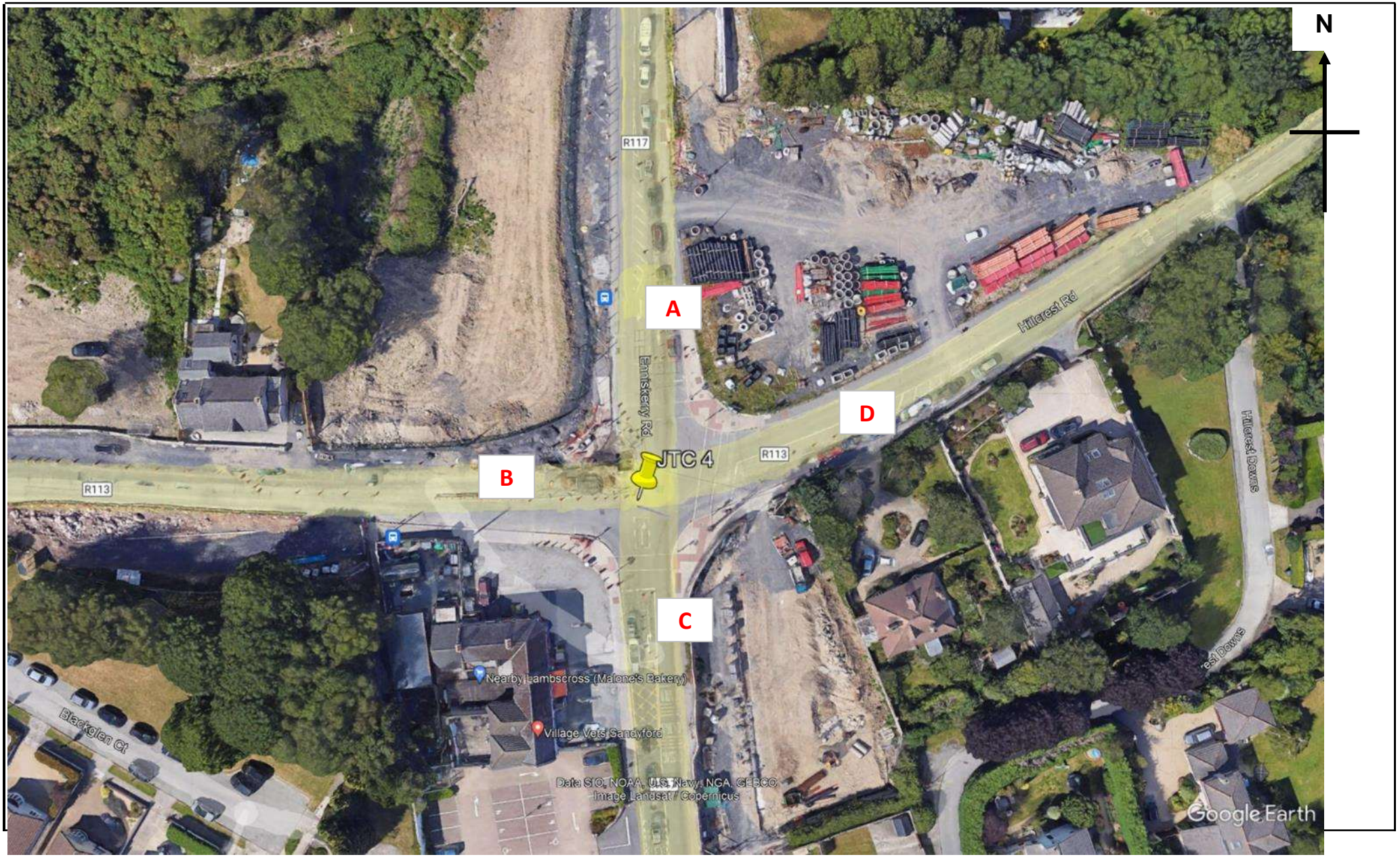

15320 / Blackglen Dublin 18
April 2024
General Location Plan

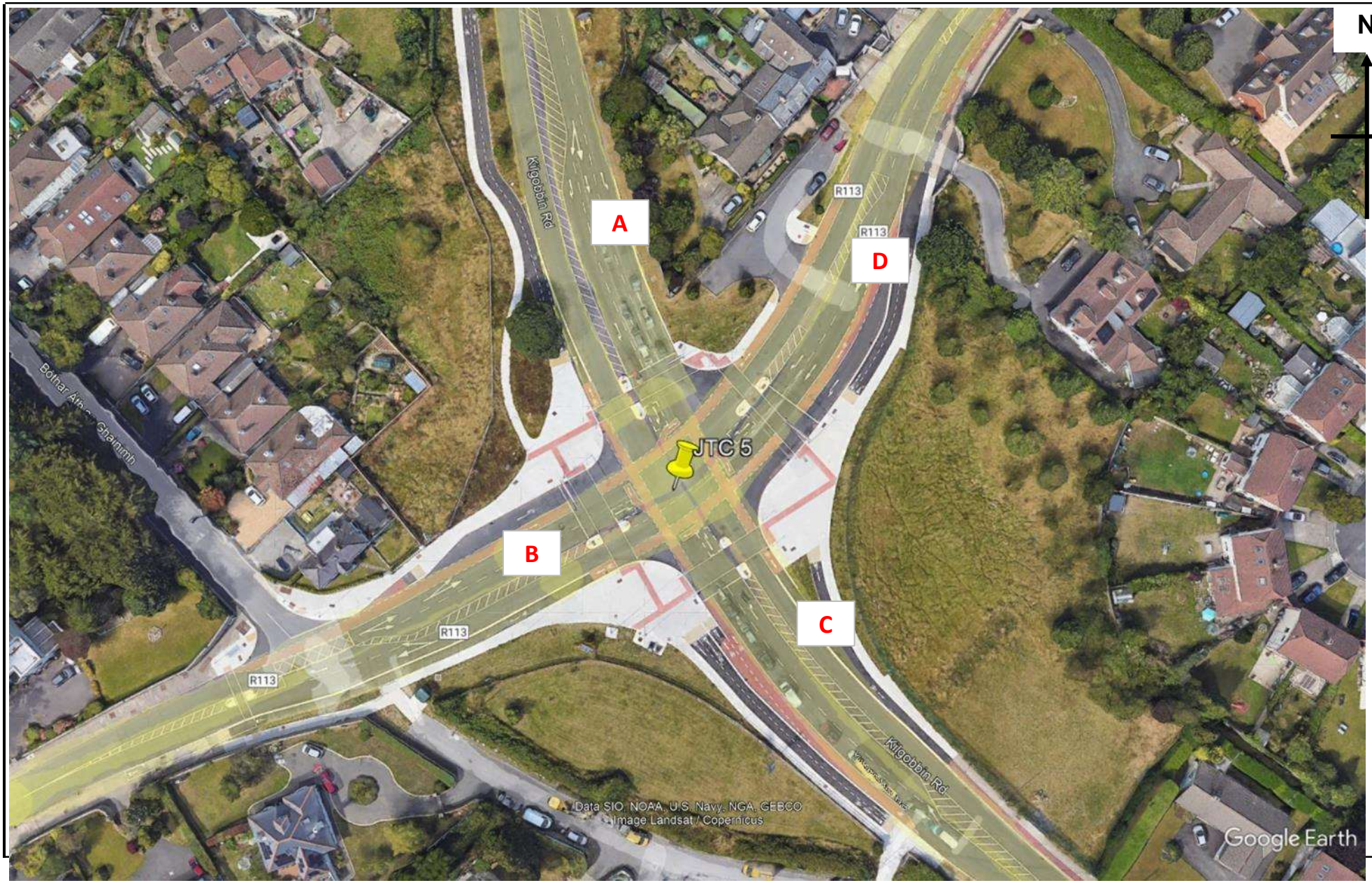

Site No. 1
Location R822 / R113(W) / Kellystown Rd / R113(E)
Date Tuesday 23 April 2024

Time	A to D - R822 to R113(E)								Veh. Total	A to C - R822 to Kellystown Rd								Veh. Total
	CAR	TAXI	LGV	OGV1	OGV2	PSV	M/C	P/C		CAR	TAXI	LGV	OGV1	OGV2	PSV	M/C	P/C	
07:00	12	2	2	1	0	0	0	0	17	7	0	2	0	0	0	0	0	9
07:15	8	0	0	2	1	0	0	0	11	5	0	0	1	0	0	0	0	6
07:30	7	1	5	0	0	0	0	0	13	15	2	2	0	0	0	0	0	19
07:45	21	0	3	0	0	0	0	0	24	13	1	3	0	0	0	0	0	17
Hour	48	3	10	3	1	0	0	0	65	40	3	7	1	0	0	0	0	51
08:00	27	0	3	0	0	0	0	1	31	14	0	0	0	0	0	0	0	14
08:15	35	1	6	2	0	1	0	0	45	6	0	1	0	0	0	0	0	7
08:30	26	0	1	1	0	0	0	0	28	6	0	0	0	0	0	0	0	6
08:45	17	0	3	1	0	0	0	0	21	5	0	1	0	0	0	0	0	6
Hour	105	1	13	4	0	1	0	1	125	31	0	2	0	0	0	0	0	33
09:00	21	0	2	1	0	0	0	1	25	14	1	1	0	0	0	0	0	16
09:15	37	1	10	1	0	0	0	0	49	3	0	3	0	0	0	0	0	6
09:30	25	0	7	2	0	0	0	0	34	8	0	1	1	0	0	0	0	10
09:45	22	0	2	0	0	0	0	0	24	5	0	0	0	0	0	0	0	5
Hour	105	1	21	4	0	0	0	1	132	30	1	5	1	0	0	0	0	37
10:00	26	1	3	0	0	0	0	1	31	6	1	1	0	0	0	0	0	8
10:15	17	0	5	0	0	0	1	0	23	3	0	0	0	0	0	0	0	3
10:30	30	1	3	2	1	0	1	0	38	11	0	1	0	0	0	0	0	12
10:45	21	0	3	0	0	0	0	0	24	7	1	3	0	0	0	0	0	11
Hour	94	2	14	2	1	0	2	1	116	27	2	5	0	0	0	0	0	34
11:00	24	0	4	1	0	0	0	0	29	10	0	2	1	0	0	0	0	13
11:15	37	0	3	1	0	0	1	0	42	10	0	1	0	0	0	0	0	11
11:30	25	0	2	0	0	0	0	1	28	10	1	1	0	0	0	0	3	15
11:45	36	1	4	1	1	0	0	0	43	12	0	3	0	0	0	0	0	15
Hour	122	1	13	3	1	0	1	1	142	42	1	7	1	0	0	0	3	54
12:00	28	0	5	1	0	0	1	1	36	5	0	0	0	0	0	0	0	5
12:15	27	1	2	1	0	0	0	0	31	13	0	0	1	0	0	1	0	15
12:30	26	1	6	1	0	0	2	0	36	11	0	2	0	0	0	1	1	15
12:45	27	0	2	1	0	1	1	2	34	9	0	1	0	0	0	0	0	10
Hour	108	2	15	4	0	1	4	3	137	38	0	3	1	0	0	2	1	45
13:00	20	2	3	0	0	0	1	0	26	10	1	1	0	0	0	1	0	13
13:15	28	0	0	2	0	0	0	0	30	13	1	0	0	0	0	0	0	14
13:30	29	0	3	1	0	0	0	0	33	14	2	0	1	0	0	0	0	17
13:45	26	1	2	1	1	2	1	1	35	15	1	4	1	0	0	0	0	21
Hour	103	3	8	4	1	2	2	1	124	52	5	5	2	0	0	1	0	65
14:00	22	0	7	1	0	0	0	0	30	15	0	1	1	0	0	0	0	17
14:15	30	2	3	0	0	0	1	2	38	14	1	1	0	0	0	0	0	16
14:30	30	0	1	1	0	0	0	1	33	17	1	2	0	0	0	0	0	20
14:45	34	1	0	1	0	0	0	0	36	12	0	3	0	0	0	1	1	17
Hour	116	3	11	3	0	0	1	3	137	58	2	7	1	0	0	1	1	70
15:00	37	1	2	0	0	0	0	2	42	12	1	3	0	0	0	0	0	16
15:15	30	0	3	1	0	0	0	0	34	15	1	1	0	0	0	0	0	17
15:30	36	1	6	0	0	0	0	0	43	14	2	1	0	0	0	1	1	19
15:45	52	0	6	0	0	0	1	0	59	10	0	3	0	0	0	0	0	13
Hour	155	2	17	1	0	0	1	2	178	51	4	8	0	0	0	1	1	65
16:00	41	0	5	1	0	0	0	0	47	20	2	0	0	0	0	0	0	22
16:15	37	1	5	0	0	0	0	1	44	21	0	1	0	0	0	0	0	22
16:30	43	0	4	0	0	0	1	0	48	12	0	1	0	0	0	0	4	17
16:45	35	0	4	0	0	0	0	1	40	20	1	4	0	0	0	1	0	26
Hour	156	1	18	1	0	0	1	2	179	73	3	6	0	0	0	1	4	87
17:00	42	0	6	1	0	0	0	1	50	24	0	0	0	0	0	1	0	25
17:15	49	1	1	0	1	0	0	1	53	26	1	0	1	0	0	0	1	29
17:30	49	0	5	0	0	0	0	0	54	19	0	1	0	0	0	0	1	21
17:45	31	1	3	0	0	0	2	7	44	13	0	1	0	0	0	0	4	18
Hour	171	2	15	1	1	0	2	9	201	82	1	2	1	0	0	1	6	93
18:00	49	0	2	1	0	0	2	3	57	14	0	2	0	1	0	0	0	17
18:15	40	0	5	0	0	0	3	0	48	10	0	1	0	0	1	0	2	14
18:30	42	0	4	0	0	0	0	0	46	11	1	1	0	0	5	0	1	19
18:45	36	1	2	0	0	0	2	1	42	10	2	0	0	0	4	0	1	17
Hour	167	1	13	1	0	0	7	4	193	45	3	4	0	1	10	0	4	67
Total	1450	22	168	31	5	4	21	28	1729	569	25	61	8	1	10	7	20	701

Site No. 1
Location R822 / R113(W) / Kellystown Rd / R113(E)
Date Tuesday 23 April 2024

Time	A to B - R822 to R113(W)								Veh. Total	B to A - R113(W) to R822								Veh. Total
	CAR	TAXI	LGV	OGV1	OGV2	PSV	M/C	P/C		CAR	TAXI	LGV	OGV1	OGV2	PSV	M/C	P/C	
07:00	2	0	2	0	0	0	0	0	4	5	0	0	1	0	0	0	0	6
07:15	5	0	1	0	0	0	0	0	6	10	0	2	1	0	0	0	0	13
07:30	6	0	0	0	0	0	0	0	6	15	0	2	0	0	0	0	0	17
07:45	20	0	0	0	0	0	1	0	21	12	0	2	0	0	0	0	0	14
Hour	33	0	3	0	0	0	1	0	37	42	0	6	2	0	0	0	0	50
08:00	23	0	1	0	0	1	0	0	25	67	0	1	0	0	0	0	1	69
08:15	20	2	1	0	0	0	0	0	23	53	2	1	0	0	0	0	0	56
08:30	13	0	1	0	0	0	0	0	14	58	1	4	0	0	0	0	0	63
08:45	15	0	0	0	0	0	0	0	15	40	0	2	0	0	0	0	0	42
Hour	71	2	3	0	0	1	0	0	77	218	3	8	0	0	0	0	1	230
09:00	18	0	1	0	0	0	0	0	19	31	0	4	0	0	0	0	0	35
09:15	12	0	1	0	0	0	0	0	13	4	0	0	0	0	0	0	0	4
09:30	14	0	2	0	0	0	0	0	16	12	0	0	0	0	0	0	0	12
09:45	16	1	1	1	0	0	0	0	19	8	0	0	0	0	0	0	0	8
Hour	60	1	5	1	0	0	0	0	67	55	0	4	0	0	0	0	0	59
10:00	13	0	1	0	0	0	0	0	14	11	0	0	0	0	0	0	0	11
10:15	10	0	2	2	0	0	0	0	14	7	0	1	2	0	0	0	0	10
10:30	11	1	4	0	0	0	0	0	16	8	0	0	1	0	0	0	0	9
10:45	15	0	0	1	0	0	0	0	16	12	1	0	1	0	0	0	0	14
Hour	49	1	7	3	0	0	0	0	60	38	1	1	4	0	0	0	0	44
11:00	15	0	1	2	0	0	0	2	20	8	0	0	0	0	0	0	0	8
11:15	20	1	0	0	0	0	0	0	21	14	1	0	0	0	0	0	0	15
11:30	28	0	4	0	0	0	0	1	33	11	0	0	1	0	0	0	0	12
11:45	16	0	0	1	0	0	0	0	17	16	0	0	0	0	0	0	0	16
Hour	79	1	5	3	0	0	0	3	91	49	1	0	1	0	0	0	0	51
12:00	13	0	0	0	0	0	0	1	14	20	0	1	0	0	0	0	0	21
12:15	9	0	0	0	0	0	0	0	9	14	0	4	0	0	0	0	0	18
12:30	11	0	2	0	0	0	0	0	13	14	0	1	0	0	0	0	0	15
12:45	7	0	3	0	0	0	0	1	11	14	0	2	0	0	0	0	1	17
Hour	40	0	5	0	0	0	0	2	47	62	0	8	0	0	0	0	1	71
13:00	12	0	0	0	0	0	0	0	12	21	0	0	0	0	0	0	0	21
13:15	9	0	0	0	0	0	0	1	10	24	0	2	0	0	0	0	0	26
13:30	8	1	2	0	0	0	0	0	11	18	0	1	0	0	0	0	0	19
13:45	21	2	0	0	0	0	0	0	23	15	1	0	0	0	0	0	0	16
Hour	50	3	2	0	0	0	0	1	56	78	1	3	0	0	0	0	0	82
14:00	14	0	2	0	0	0	0	0	16	18	0	0	0	0	0	0	0	18
14:15	14	0	1	0	0	0	0	0	15	17	0	1	0	0	0	0	1	19
14:30	15	0	0	0	0	0	0	0	15	17	1	1	0	0	0	0	1	20
14:45	20	2	1	0	0	0	0	0	23	13	0	0	0	0	0	0	2	15
Hour	63	2	4	0	0	0	0	0	69	65	1	2	0	0	0	0	4	72
15:00	10	0	0	0	0	0	0	0	10	13	1	0	0	0	0	0	0	14
15:15	16	0	1	0	0	0	0	0	17	20	0	1	0	0	0	0	1	22
15:30	17	0	1	0	0	0	0	0	18	19	0	1	0	0	0	0	0	20
15:45	23	1	1	0	0	0	0	1	26	12	0	3	0	0	0	0	0	15
Hour	66	1	3	0	0	0	0	1	71	64	1	5	0	0	0	0	1	71
16:00	15	0	2	0	0	0	1	0	18	26	0	1	0	0	1	0	0	28
16:15	21	2	2	0	0	1	0	1	27	14	0	1	0	0	0	0	0	15
16:30	18	1	2	0	0	0	1	0	22	13	1	3	1	0	0	0	0	18
16:45	25	0	5	0	0	0	0	2	32	21	0	0	0	0	0	0	0	21
Hour	79	3	11	0	0	1	2	3	99	74	1	5	1	0	1	0	0	82
17:00	23	0	2	0	0	0	0	0	25	25	0	1	0	0	0	0	0	26
17:15	31	0	4	0	0	0	0	0	35	19	1	2	0	0	0	0	1	23
17:30	40	0	2	0	0	0	0	1	43	16	0	0	0	0	0	0	0	16
17:45	70	0	1	0	0	0	0	3	74	21	0	0	0	1	0	0	0	22
Hour	164	0	9	0	0	0	0	4	177	81	1	3	0	1	0	0	1	87
18:00	46	0	4	0	0	0	0	2	52	35	1	0	0	0	0	2	1	39
18:15	43	0	5	1	0	0	0	0	49	22	0	1	1	0	0	0	0	24
18:30	35	0	2	0	0	0	0	1	38	28	0	0	0	0	0	0	1	29
18:45	35	0	2	0	0	0	0	1	38	17	0	0	0	0	0	0	0	17
Hour	159	0	13	1	0	0	0	4	177	102	1	1	1	0	0	2	2	109
Total	913	14	70	8	0	2	3	18	1028	928	11	46	9	1	1	2	10	1008

Site No. 1
Location R822 / R113(W) / Kellystown Rd / R113(E)
Date Tuesday 23 April 2024

Time	B to D - R113(W) to R113(E)								Veh. Total	B to C - R113(W) to Kellystown Rd								Veh. Total
	CAR	TAXI	LGV	OGV1	OGV2	PSV	M/C	P/C		CAR	TAXI	LGV	OGV1	OGV2	PSV	M/C	P/C	
07:00	6	0	0	1	0	0	0	0	7	0	0	0	0	0	0	0	0	0
07:15	8	1	0	0	0	0	0	0	9	0	1	0	0	0	0	0	0	1
07:30	10	0	0	0	0	0	0	0	10	0	0	0	0	0	0	0	0	0
07:45	23	0	3	0	0	0	0	1	27	6	0	0	0	0	0	0	0	6
Hour	47	1	3	1	0	0	0	1	53	6	1	0	0	0	0	0	0	7
08:00	25	1	2	0	0	0	0	0	28	2	0	0	0	0	0	0	0	2
08:15	36	1	1	0	0	0	0	0	38	1	1	0	0	0	0	0	0	2
08:30	15	1	1	0	0	1	0	0	18	4	0	0	0	0	0	0	0	4
08:45	21	0	4	0	0	0	0	0	25	4	0	2	0	0	0	0	0	6
Hour	97	3	8	0	0	1	0	0	109	11	1	2	0	0	0	0	0	14
09:00	19	0	2	0	0	0	0	0	21	1	0	1	0	0	0	0	0	2
09:15	22	0	0	0	0	0	0	0	22	2	0	0	1	0	0	0	0	3
09:30	8	0	2	0	0	0	0	1	11	1	0	0	0	0	0	0	0	1
09:45	6	0	1	0	0	0	0	0	7	1	0	0	0	0	0	0	0	1
Hour	55	0	5	0	0	0	0	1	61	5	0	1	1	0	0	0	0	7
10:00	5	0	0	0	0	0	0	0	5	2	0	0	0	0	0	0	0	2
10:15	6	0	2	0	0	0	0	0	8	1	0	0	0	0	0	0	0	1
10:30	6	0	1	0	0	0	0	0	7	1	0	1	0	0	0	0	0	2
10:45	7	1	1	0	0	0	0	0	9	1	1	0	0	0	0	0	0	2
Hour	24	1	4	0	0	0	0	0	29	5	1	1	0	0	0	0	0	7
11:00	6	0	1	0	0	0	0	0	7	1	0	0	0	0	0	0	0	1
11:15	6	0	2	0	0	0	0	0	8	1	0	0	0	0	0	0	0	1
11:30	5	0	1	0	0	0	0	0	6	2	0	1	0	0	0	0	0	3
11:45	9	0	0	2	0	0	0	0	11	1	0	0	1	0	0	0	0	2
Hour	26	0	4	2	0	0	0	0	32	5	0	1	1	0	0	0	0	7
12:00	9	0	0	0	0	0	0	0	9	0	0	0	0	0	0	0	0	0
12:15	11	0	3	0	0	0	0	0	14	0	0	2	0	0	0	0	0	2
12:30	6	0	0	0	0	0	0	0	6	0	0	1	0	0	0	0	0	1
12:45	6	0	1	0	0	0	0	0	7	2	0	0	0	0	0	0	0	2
Hour	32	0	4	0	0	0	0	0	36	2	0	3	0	0	0	0	0	5
13:00	7	0	1	1	0	1	0	0	10	0	0	2	0	0	0	0	0	2
13:15	6	0	1	0	0	0	1	2	10	0	0	0	0	0	0	0	0	0
13:30	8	0	0	0	0	0	0	0	8	0	0	0	0	0	0	0	0	0
13:45	10	0	2	0	0	0	0	0	12	3	0	0	0	0	0	0	0	3
Hour	31	0	4	1	0	1	1	2	40	3	0	2	0	0	0	0	0	5
14:00	20	0	1	0	0	0	0	1	22	5	0	0	0	0	0	0	0	5
14:15	6	0	1	0	0	0	1	0	8	2	0	0	0	0	0	0	0	2
14:30	13	1	0	0	0	0	0	0	14	0	0	0	0	0	0	0	0	0
14:45	11	0	1	0	0	0	0	0	12	3	0	1	0	0	0	0	0	4
Hour	50	1	3	0	0	0	1	1	56	10	0	1	0	0	0	0	0	11
15:00	8	1	0	0	0	0	0	0	9	2	0	0	0	0	0	0	0	2
15:15	9	0	0	0	0	1	0	0	10	0	0	0	0	0	0	0	0	0
15:30	9	0	2	0	0	0	0	0	11	2	0	0	0	0	0	0	0	2
15:45	8	0	0	0	0	0	0	1	9	2	0	1	1	0	0	0	0	4
Hour	34	1	2	0	0	1	0	1	39	6	0	1	1	0	0	0	0	8
16:00	11	0	1	0	0	0	0	1	13	3	0	0	0	0	0	0	0	3
16:15	11	0	3	0	0	0	0	0	14	2	0	0	0	0	0	0	0	2
16:30	20	0	3	0	0	0	0	0	23	1	0	0	0	0	0	0	0	1
16:45	8	0	1	0	0	0	0	0	9	7	0	0	0	0	0	0	0	7
Hour	50	0	8	0	0	0	0	1	59	13	0	0	0	0	0	0	0	13
17:00	15	0	1	0	0	0	0	3	19	4	0	0	0	0	0	0	0	4
17:15	16	1	1	0	0	0	0	1	19	3	0	0	0	0	0	0	0	3
17:30	16	0	1	0	0	0	0	1	18	3	0	0	0	0	0	0	0	3
17:45	11	0	0	0	0	0	0	0	11	1	0	0	0	0	0	0	1	2
Hour	58	1	3	0	0	0	0	5	67	11	0	0	0	0	0	0	1	12
18:00	13	0	0	0	0	0	0	0	13	5	0	0	0	0	0	0	0	5
18:15	8	0	0	0	0	0	0	0	8	2	0	0	0	0	0	0	0	2
18:30	11	0	1	0	0	0	0	1	13	0	0	0	0	0	0	0	0	0
18:45	15	0	0	0	0	0	0	0	15	0	0	0	0	0	0	0	0	0
Hour	47	0	1	0	0	0	0	1	49	7	0	0	0	0	0	0	0	7
Total	551	8	49	4	0	3	2	13	630	84	3	12	3	0	0	0	1	103

Site No. 1
Location R822 / R113(W) / Kellystown Rd / R113(E)
Date Tuesday 23 April 2024

Time	C to B - Kellystown Rd to R113(W)								Veh. Total	C to A - Kellystown Rd to R822								Veh. Total
	CAR	TAXI	LGV	OGV1	OGV2	PSV	M/C	P/C		CAR	TAXI	LGV	OGV1	OGV2	PSV	M/C	P/C	
07:00	0	0	1	0	0	0	0	0	1	9	0	0	0	0	0	0	0	9
07:15	1	0	0	0	0	0	0	0	1	8	1	1	0	0	0	0	2	12
07:30	0	0	0	0	0	0	0	0	0	17	2	1	1	0	0	0	0	21
07:45	2	0	0	0	0	0	0	0	2	20	1	2	0	0	0	0	0	23
Hour	3	0	1	0	0	0	0	0	4	54	4	4	1	0	0	0	2	65
08:00	2	0	0	0	0	0	0	0	2	19	0	0	0	0	0	0	0	19
08:15	2	0	0	0	0	0	0	0	2	20	1	1	0	0	0	0	1	23
08:30	1	0	1	0	0	0	0	0	2	23	0	2	0	0	0	0	0	25
08:45	2	0	0	0	0	0	0	0	2	10	1	0	0	0	0	0	1	12
Hour	7	0	1	0	0	0	0	0	8	72	2	3	0	0	0	0	2	79
09:00	3	0	2	0	0	0	0	0	5	13	1	1	0	0	0	0	0	15
09:15	0	0	0	0	0	0	0	0	0	6	0	1	0	0	0	0	0	7
09:30	1	0	0	0	0	0	0	0	1	12	1	3	0	0	0	0	0	16
09:45	0	0	0	0	0	0	0	0	0	11	1	0	1	0	0	0	0	13
Hour	4	0	2	0	0	0	0	0	6	42	3	5	1	0	0	0	0	51
10:00	0	0	0	0	0	0	0	0	0	2	0	0	0	0	0	0	0	2
10:15	0	0	0	0	0	0	0	0	0	6	1	0	0	0	0	0	1	8
10:30	2	0	0	0	0	0	0	0	2	8	0	0	0	0	0	0	0	8
10:45	0	0	0	0	0	0	0	0	0	3	0	0	0	0	0	0	0	3
Hour	2	0	0	0	0	0	0	0	2	19	1	0	0	0	0	0	1	21
11:00	1	0	0	0	0	0	0	0	1	6	0	0	0	0	0	0	0	6
11:15	0	0	1	0	0	0	0	0	1	11	0	2	2	0	0	0	0	15
11:30	0	0	0	0	0	0	0	0	0	9	0	3	0	0	0	0	0	12
11:45	0	0	1	0	0	0	0	0	1	7	2	2	2	0	0	0	0	13
Hour	1	0	2	0	0	0	0	0	3	33	2	7	4	0	0	0	0	46
12:00	4	0	0	0	0	0	0	0	4	18	0	0	0	0	0	0	0	18
12:15	0	0	0	0	0	0	0	0	0	12	0	0	0	0	0	1	0	13
12:30	2	0	0	0	0	0	0	0	2	4	0	1	1	0	0	0	0	6
12:45	0	0	1	0	0	0	0	0	1	5	1	0	1	0	0	0	1	8
Hour	6	0	1	0	0	0	0	0	7	39	1	1	2	0	0	1	1	45
13:00	1	0	1	0	0	0	0	0	2	16	1	3	0	0	0	1	1	22
13:15	2	0	2	0	0	0	0	0	4	7	2	2	0	1	0	0	0	12
13:30	0	0	0	0	0	0	0	0	0	7	0	0	0	0	0	0	0	7
13:45	3	0	0	0	0	0	0	0	3	13	1	2	0	0	0	0	0	16
Hour	6	0	3	0	0	0	0	0	9	43	4	7	0	1	0	1	1	57
14:00	2	0	0	0	0	0	0	0	2	9	2	3	1	0	0	0	0	15
14:15	0	0	0	0	0	0	0	0	0	19	1	3	0	0	0	2	0	25
14:30	2	0	0	0	0	0	0	0	2	10	0	0	1	0	0	0	0	11
14:45	2	0	1	0	0	0	0	0	3	11	0	3	1	0	0	1	0	16
Hour	6	0	1	0	0	0	0	0	7	49	3	9	3	0	0	3	0	67
15:00	2	0	0	0	0	0	0	0	2	20	3	3	0	0	0	0	0	26
15:15	1	0	0	0	0	0	0	0	1	15	0	1	0	0	0	0	0	16
15:30	1	0	0	0	0	0	0	0	1	12	1	1	0	0	0	0	0	14
15:45	2	0	1	0	0	0	0	0	3	13	0	2	0	0	0	0	0	15
Hour	6	0	1	0	0	0	0	0	7	60	4	7	0	0	0	0	0	71
16:00	0	0	0	0	0	0	0	0	0	20	0	1	1	0	0	0	1	23
16:15	2	0	1	0	0	0	0	0	3	17	0	0	0	0	0	0	1	18
16:30	2	0	1	0	0	0	0	0	3	11	0	2	0	0	0	0	0	13
16:45	5	0	0	0	0	0	0	0	5	25	0	2	0	0	0	0	1	28
Hour	9	0	2	0	0	0	0	0	11	73	0	5	1	0	0	0	3	82
17:00	4	0	1	0	0	0	0	0	5	18	1	0	0	0	0	1	0	20
17:15	5	0	0	0	0	0	0	0	5	20	0	1	0	0	0	0	1	22
17:30	1	0	1	0	0	0	0	0	2	13	0	0	0	0	0	0	1	14
17:45	3	0	1	0	0	0	0	0	4	15	0	1	1	0	0	0	1	18
Hour	13	0	3	0	0	0	0	0	16	66	1	2	1	0	0	1	3	74
18:00	5	0	0	0	0	0	0	0	5	9	1	0	0	0	0	0	1	11
18:15	3	0	1	0	0	0	0	0	4	7	0	0	0	0	0	1	0	8
18:30	1	0	0	0	0	0	0	0	1	8	0	0	0	0	0	0	2	10
18:45	2	0	0	0	0	0	0	0	2	13	2	2	0	0	0	0	0	17
Hour	11	0	1	0	0	0	0	0	12	37	3	2	0	0	0	1	3	46
Total	74	0	18	0	0	0	0	0	92	587	28	52	13	1	0	7	16	704

Site No. 1
Location R822 / R113(W) / Kellystown Rd / R113(E)
Date Tuesday 23 April 2024

Time	C to D - Kellystown Rd to R113(E)								Veh. Total	D to C - R113(E) to Kellystown Rd								Veh. Total
	CAR	TAXI	LGV	OGV1	OGV2	PSV	M/C	P/C		CAR	TAXI	LGV	OGV1	OGV2	PSV	M/C	P/C	
07:00	1	0	0	0	0	0	0	0	1	1	0	0	0	0	0	0	0	1
07:15	0	0	0	0	0	0	0	0	0	1	2	0	0	0	0	0	0	3
07:30	5	1	0	0	0	0	0	0	6	6	0	0	0	0	0	0	1	7
07:45	2	0	0	0	0	0	0	1	3	2	0	0	0	0	0	0	1	3
Hour	8	1	0	0	0	0	0	1	10	10	2	0	0	0	0	0	2	14
08:00	5	0	0	0	0	0	0	2	7	3	0	1	0	0	0	0	0	4
08:15	1	0	1	0	0	0	0	1	3	2	0	0	0	0	0	0	1	3
08:30	0	0	0	0	0	0	0	0	0	0	0	1	0	0	0	0	1	2
08:45	1	0	0	0	0	0	0	0	1	1	0	0	0	0	0	0	0	1
Hour	7	0	1	0	0	0	0	3	11	6	0	2	0	0	0	0	2	10
09:00	2	0	1	0	0	0	0	0	3	4	0	0	0	0	0	0	0	4
09:15	2	0	0	0	0	0	0	0	2	2	0	1	0	0	0	0	0	3
09:30	1	0	0	0	0	0	0	0	1	0	0	0	0	0	0	0	0	0
09:45	1	0	0	0	0	0	0	0	1	1	0	0	0	0	0	0	0	1
Hour	6	0	1	0	0	0	0	0	7	7	0	1	0	0	0	0	0	8
10:00	1	0	0	0	0	0	0	0	1	1	0	0	1	0	0	0	0	2
10:15	1	0	0	0	0	0	0	0	1	2	0	1	0	0	0	0	0	3
10:30	0	0	1	0	0	0	0	0	1	2	0	1	0	0	0	0	0	3
10:45	0	0	0	0	0	0	0	0	0	0	0	0	0	0	0	0	1	1
Hour	2	0	1	0	0	0	0	0	3	5	0	2	1	0	0	0	1	9
11:00	1	0	0	0	0	0	0	0	1	0	0	0	0	0	0	0	0	0
11:15	0	0	0	0	0	0	0	0	0	2	0	3	0	0	0	0	0	5
11:30	2	0	0	0	0	0	0	0	2	1	0	0	0	0	0	0	0	1
11:45	1	0	0	0	0	0	0	0	1	1	0	0	0	0	0	0	0	1
Hour	4	0	0	0	0	0	0	0	4	4	0	3	0	0	0	0	0	7
12:00	4	0	1	0	0	0	0	0	5	0	0	0	0	0	0	0	0	0
12:15	0	0	0	0	0	0	0	0	0	2	0	0	0	0	0	0	0	2
12:30	3	0	1	0	0	0	0	0	4	0	0	0	0	0	0	0	0	0
12:45	0	0	0	0	0	0	0	0	0	1	0	0	0	0	0	0	0	1
Hour	7	0	2	0	0	0	0	0	9	3	0	0	0	0	0	0	0	3
13:00	1	0	0	0	0	0	0	0	1	0	0	2	0	0	0	0	0	2
13:15	1	0	0	0	0	0	0	0	1	4	1	0	0	0	0	0	0	5
13:30	3	0	0	0	0	0	0	0	3	8	0	0	0	0	0	0	0	8
13:45	1	0	0	0	0	0	0	0	1	1	0	0	0	0	0	0	0	1
Hour	6	0	0	0	0	0	0	0	6	13	1	2	0	0	0	0	0	16
14:00	3	0	0	0	0	0	0	0	3	2	0	1	0	0	0	1	0	4
14:15	1	0	0	0	0	0	0	0	1	1	0	1	0	0	0	0	0	2
14:30	2	0	0	0	0	0	0	0	2	1	0	0	0	0	0	0	0	1
14:45	5	0	0	0	0	0	0	0	5	4	0	1	0	0	0	0	0	5
Hour	11	0	0	0	0	0	0	0	11	8	0	3	0	0	0	1	0	12
15:00	3	0	0	0	0	0	0	0	3	2	1	0	0	0	0	0	2	5
15:15	2	0	0	0	0	0	0	0	2	1	0	1	0	0	0	0	0	2
15:30	3	0	0	0	0	0	1	0	4	0	0	0	0	0	0	0	0	0
15:45	2	0	0	0	0	0	0	0	2	0	0	0	0	0	0	0	0	0
Hour	10	0	0	0	0	0	1	0	11	3	1	1	0	0	0	0	2	7
16:00	2	0	0	0	0	0	0	0	2	2	1	0	0	0	0	0	0	3
16:15	3	0	0	0	0	0	0	0	3	3	0	1	0	0	0	0	0	4
16:30	7	0	0	0	0	0	0	0	7	4	0	1	0	0	0	0	0	5
16:45	5	0	0	0	0	0	0	0	5	7	0	0	0	0	0	0	0	7
Hour	17	0	0	0	0	0	0	0	17	16	1	2	0	0	0	0	0	19
17:00	6	0	1	0	0	0	0	0	7	5	0	0	0	0	0	0	0	5
17:15	6	1	0	0	0	0	0	0	7	2	0	0	0	0	0	0	0	2
17:30	5	0	0	0	0	0	0	0	5	2	0	0	0	0	0	0	0	2
17:45	3	0	0	0	0	0	0	0	3	1	0	0	0	0	0	0	0	1
Hour	20	1	1	0	0	0	0	0	22	10	0	0	0	0	0	0	0	10
18:00	2	0	0	0	0	0	0	0	2	4	0	0	0	0	0	0	0	4
18:15	4	0	1	0	0	0	0	0	5	1	0	0	0	0	0	0	0	1
18:30	2	0	0	0	0	0	0	0	2	0	1	1	0	0	0	0	1	3
18:45	2	2	0	0	0	0	0	0	4	1	1	0	0	0	0	0	0	2
Hour	10	2	1	0	0	0	0	0	13	6	2	1	0	0	0	0	1	10
Total	108	4	7	0	0	0	1	4	124	91	7	17	1	0	0	1	8	125

Site No. 1
Location R822 / R113(W) / Kellystown Rd / R113(E)
Date Tuesday 23 April 2024

Time	D to B - R113(E) to R113(W)								Veh. Total	D to A - R113(E) to R822								Veh. Total
	CAR	TAXI	LGV	OGV1	OGV2	PSV	M/C	P/C		CAR	TAXI	LGV	OGV1	OGV2	PSV	M/C	P/C	
07:00	2	0	0	0	0	0	0	1	3	12	0	2	2	0	0	1	0	17
07:15	6	0	0	0	0	0	0	0	6	19	1	2	3	0	0	0	2	27
07:30	3	0	0	0	0	0	0	1	4	21	0	3	3	0	0	0	1	28
07:45	14	1	0	0	0	0	0	1	16	37	0	3	0	0	0	0	0	40
Hour	25	1	0	0	0	0	0	3	29	89	1	10	8	0	0	1	3	112
08:00	19	0	2	0	0	0	0	0	21	40	0	3	0	0	0	0	0	43
08:15	14	0	0	0	0	0	0	0	14	47	0	1	0	0	0	0	0	48
08:30	12	0	1	0	0	0	0	0	13	52	0	4	0	0	0	0	2	58
08:45	6	0	2	0	0	1	0	0	9	37	0	0	0	0	1	0	0	38
Hour	51	0	5	0	0	1	0	0	57	176	0	8	0	0	1	0	2	187
09:00	9	0	2	0	0	0	0	1	12	23	1	1	1	1	0	0	0	27
09:15	12	0	1	0	0	0	0	0	13	26	0	2	2	1	0	0	0	31
09:30	8	0	1	0	0	0	0	0	9	32	3	0	0	0	1	0	0	36
09:45	5	0	3	0	0	0	0	1	9	16	2	1	1	0	0	0	0	20
Hour	34	0	7	0	0	0	0	2	43	97	6	4	4	2	1	0	0	114
10:00	8	0	2	0	0	0	0	0	10	24	1	0	0	0	0	0	0	25
10:15	2	0	0	0	0	0	0	0	2	16	1	0	0	0	0	0	0	17
10:30	5	0	0	0	0	0	0	1	6	28	2	2	2	0	0	0	0	34
10:45	9	0	2	0	0	0	0	0	11	18	0	0	0	0	0	1	0	19
Hour	24	0	4	0	0	0	0	1	29	86	4	2	2	0	0	1	0	95
11:00	10	0	0	0	0	0	0	1	11	20	0	0	0	0	0	0	0	20
11:15	4	0	4	0	0	0	0	0	8	27	0	1	1	0	0	0	1	30
11:30	8	0	0	0	0	0	0	0	8	29	0	0	0	0	0	0	0	29
11:45	8	0	1	0	0	0	0	1	10	28	0	1	1	0	0	1	2	33
Hour	30	0	5	0	0	0	0	2	37	104	0	2	2	0	0	1	3	112
12:00	5	0	1	1	0	0	0	0	7	18	0	4	2	0	0	2	2	28
12:15	8	0	0	0	0	0	0	1	9	30	1	1	1	0	0	0	0	33
12:30	4	0	2	0	0	0	0	0	6	35	0	2	2	0	0	0	2	41
12:45	6	2	0	0	0	0	0	0	8	24	0	1	1	0	0	0	0	26
Hour	23	2	3	1	0	0	0	1	30	107	1	8	6	0	0	2	4	128
13:00	12	0	1	0	0	0	0	0	13	36	0	0	0	0	0	0	0	36
13:15	3	0	0	0	0	0	0	0	3	28	1	1	1	0	0	0	0	31
13:30	9	0	2	0	0	0	0	0	11	33	0	2	2	0	0	0	0	37
13:45	16	0	0	0	0	0	0	0	16	27	1	1	1	0	0	2	1	33
Hour	40	0	3	0	0	0	0	0	43	124	2	4	4	0	0	2	1	137
14:00	5	0	0	0	0	0	0	1	6	25	1	2	2	0	0	0	0	30
14:15	6	0	0	0	0	0	0	0	6	29	1	0	0	1	0	0	0	31
14:30	8	0	0	0	0	0	0	0	8	41	1	0	0	0	1	0	2	45
14:45	6	1	0	0	0	0	0	1	8	34	0	1	1	0	0	0	0	36
Hour	25	1	0	0	0	0	0	2	28	129	3	3	3	1	1	0	2	142
15:00	8	2	0	0	0	0	0	0	10	27	1	1	1	0	0	0	0	30
15:15	11	0	1	0	0	0	0	0	12	22	0	0	0	0	0	0	0	22
15:30	9	0	1	1	0	0	0	0	11	30	0	1	1	0	0	0	1	33
15:45	14	0	2	2	0	1	0	0	19	31	0	1	1	0	0	1	1	35
Hour	42	2	4	3	0	1	0	0	52	110	1	3	3	0	0	1	2	120
16:00	14	1	4	2	0	0	0	0	21	24	0	1	1	0	0	0	1	27
16:15	17	1	2	0	0	1	0	0	21	29	1	0	0	0	0	0	0	30
16:30	13	0	1	0	0	0	1	0	15	30	0	0	0	0	0	0	1	31
16:45	21	0	4	0	0	0	0	0	25	36	0	1	1	0	0	0	0	38
Hour	65	2	11	2	0	1	1	0	82	119	1	2	2	0	0	0	2	126
17:00	13	0	3	0	0	0	0	1	17	37	0	0	0	0	0	0	2	39
17:15	20	1	0	0	0	0	0	2	23	33	1	0	0	0	0	0	0	34
17:30	24	0	3	0	0	0	0	0	27	28	1	2	2	0	0	1	1	35
17:45	31	2	1	0	0	0	0	1	35	36	0	0	0	0	0	0	2	38
Hour	88	3	7	0	0	0	0	4	102	134	2	2	2	0	0	1	5	146
18:00	34	0	1	0	0	0	0	1	36	34	1	0	0	0	0	1	2	38
18:15	16	0	2	0	0	0	0	0	18	30	1	0	0	1	1	2	0	35
18:30	13	0	1	0	0	0	0	5	19	34	0	0	0	0	0	0	0	34
18:45	16	0	0	0	0	0	0	1	17	30	2	0	0	0	0	0	0	32
Hour	79	0	4	0	0	0	0	7	90	128	4	0	0	1	1	3	2	139
Total	526	11	53	6	0	3	1	22	622	1403	25	48	36	4	4	12	26	1558

Site No. 1
Location R822 / R113(W) / Kellystown Rd / R113(E)
Date Tuesday 23 April 2024

Time	To Arm A - R822								Veh. Total	From Arm A - R822								Veh. Total
	CAR	TAXI	LGV	OGV1	OGV2	PSV	M/C	P/C		CAR	TAXI	LGV	OGV1	OGV2	PSV	M/C	P/C	
07:00	26	0	2	3	0	0	1	0	32	21	2	6	1	0	0	0	0	30
07:15	37	2	5	4	0	0	0	4	52	18	0	1	3	1	0	0	0	23
07:30	53	2	6	4	0	0	0	1	66	28	3	7	0	0	0	0	0	38
07:45	69	1	7	0	0	0	0	0	77	54	1	6	0	0	0	1	0	62
Hour	185	5	20	11	0	0	1	5	227	121	6	20	4	1	0	1	0	153
08:00	126	0	4	0	0	0	0	1	131	64	0	4	0	0	1	0	1	70
08:15	120	3	3	0	0	0	0	1	127	61	3	8	2	0	1	0	0	75
08:30	133	1	10	0	0	0	0	2	146	45	0	2	1	0	0	0	0	48
08:45	87	1	2	0	0	1	0	1	92	37	0	4	1	0	0	0	0	42
Hour	466	5	19	0	0	1	0	5	496	207	3	18	4	0	2	0	1	235
09:00	67	2	6	1	1	0	0	0	77	53	1	4	1	0	0	0	1	60
09:15	36	0	3	2	1	0	0	0	42	52	1	14	1	0	0	0	0	68
09:30	56	4	3	0	0	1	0	0	64	47	0	10	3	0	0	0	0	60
09:45	35	3	1	2	0	0	0	0	41	43	1	3	1	0	0	0	0	48
Hour	194	9	13	5	2	1	0	0	224	195	3	31	6	0	0	0	1	236
10:00	37	1	0	0	0	0	0	0	38	45	2	5	0	0	0	0	1	53
10:15	29	2	1	2	0	0	0	1	35	30	0	7	2	0	0	1	0	40
10:30	44	2	2	3	0	0	0	0	51	52	2	8	2	1	0	1	0	66
10:45	33	1	0	1	0	0	1	0	36	43	1	6	1	0	0	0	0	51
Hour	143	6	3	6	0	0	1	1	160	170	5	26	5	1	0	2	1	210
11:00	34	0	0	0	0	0	0	0	34	49	0	7	4	0	0	0	2	62
11:15	52	1	3	3	0	0	0	1	60	67	1	4	1	0	0	1	0	74
11:30	49	0	3	1	0	0	0	0	53	63	1	7	0	0	0	0	5	76
11:45	51	2	3	3	0	0	1	2	62	64	1	7	2	1	0	0	0	75
Hour	186	3	9	7	0	0	1	3	209	243	3	25	7	1	0	1	7	287
12:00	56	0	5	2	0	0	2	2	67	46	0	5	1	0	0	1	2	55
12:15	56	1	5	1	0	0	1	0	64	49	1	2	2	0	0	1	0	55
12:30	53	0	4	3	0	0	0	2	62	48	1	10	1	0	0	3	1	64
12:45	43	1	3	2	0	0	0	2	51	43	0	6	1	0	1	1	3	55
Hour	208	2	17	8	0	0	3	6	244	186	2	23	5	0	1	6	6	229
13:00	73	1	3	0	0	0	1	1	79	42	3	4	0	0	0	2	0	51
13:15	59	3	5	1	1	0	0	0	69	50	1	0	2	0	0	0	1	54
13:30	58	0	3	2	0	0	0	0	63	51	3	5	2	0	0	0	0	61
13:45	55	3	3	1	0	0	2	1	65	62	4	6	2	1	2	1	1	79
Hour	245	7	14	4	1	0	3	2	276	205	11	15	6	1	2	3	2	245
14:00	52	3	5	3	0	0	0	0	63	51	0	10	2	0	0	0	0	63
14:15	65	2	4	0	1	0	2	1	75	58	3	5	0	0	0	1	2	69
14:30	68	2	1	1	0	1	0	3	76	62	1	3	1	0	0	0	1	68
14:45	58	0	4	2	0	0	1	2	67	66	3	4	1	0	0	1	1	76
Hour	243	7	14	6	1	1	3	6	281	237	7	22	4	0	0	2	4	276
15:00	60	5	4	1	0	0	0	0	70	59	2	5	0	0	0	0	2	68
15:15	57	0	2	0	0	0	0	1	60	61	1	5	1	0	0	0	0	68
15:30	61	1	3	1	0	0	0	1	67	67	3	8	0	0	0	1	1	80
15:45	56	0	6	1	0	0	1	1	65	85	1	10	0	0	0	1	1	98
Hour	234	6	15	3	0	0	1	3	262	272	7	28	1	0	0	2	4	314
16:00	70	0	3	2	0	1	0	2	78	76	2	7	1	0	0	1	0	87
16:15	60	1	1	0	0	0	0	1	63	79	3	8	0	0	1	0	2	93
16:30	54	1	5	1	0	0	0	1	62	73	1	7	0	0	0	2	4	87
16:45	82	0	3	1	0	0	0	1	87	80	1	13	0	0	0	1	3	98
Hour	266	2	12	4	0	1	0	5	290	308	7	35	1	0	1	4	9	365
17:00	80	1	1	0	0	0	1	2	85	89	0	8	1	0	0	1	1	100
17:15	72	2	3	0	0	0	0	2	79	106	2	5	1	1	0	0	2	117
17:30	57	1	2	2	0	0	1	2	65	108	0	8	0	0	0	0	2	118
17:45	72	0	1	1	1	0	0	3	78	114	1	5	0	0	0	2	14	136
Hour	281	4	7	3	1	0	2	9	307	417	3	26	2	1	0	3	19	471
18:00	78	3	0	0	0	0	3	4	88	109	0	8	1	1	0	2	5	126
18:15	59	1	1	1	1	1	3	0	67	93	0	11	1	0	1	3	2	111
18:30	70	0	0	0	0	0	0	3	73	88	1	7	0	0	5	0	2	103
18:45	60	4	2	0	0	0	0	0	66	81	3	4	0	0	4	2	3	97
Hour	267	8	3	1	1	1	6	7	294	371	4	30	2	1	10	7	12	437
Total	2918	64	146	58	6	5	21	52	3270	2932	61	299	47	6	16	31	66	3458

Site No. 1
Location R822 / R113(W) / Kellystown Rd / R113(E)
Date Tuesday 23 April 2024

Time	To Arm B - R113(W)								Veh. Total	From Arm B - R113(W)								Veh. Total
	CAR	TAXI	LGV	OGV1	OGV2	PSV	M/C	P/C		CAR	TAXI	LGV	OGV1	OGV2	PSV	M/C	P/C	
07:00	4	0	3	0	0	0	0	1	8	11	0	0	2	0	0	0	0	13
07:15	12	0	1	0	0	0	0	0	13	18	2	2	1	0	0	0	0	23
07:30	9	0	0	0	0	0	0	1	10	25	0	2	0	0	0	0	0	27
07:45	36	1	0	0	0	0	1	1	39	41	0	5	0	0	0	0	1	47
Hour	61	1	4	0	0	0	1	3	70	95	2	9	3	0	0	0	1	110
08:00	44	0	3	0	0	1	0	0	48	94	1	3	0	0	0	0	1	99
08:15	36	2	1	0	0	0	0	0	39	90	4	2	0	0	0	0	0	96
08:30	26	0	3	0	0	0	0	0	29	77	2	5	0	0	1	0	0	85
08:45	23	0	2	0	0	1	0	0	26	65	0	8	0	0	0	0	0	73
Hour	129	2	9	0	0	2	0	0	142	326	7	18	0	0	1	0	1	353
09:00	30	0	5	0	0	0	0	1	36	51	0	7	0	0	0	0	0	58
09:15	24	0	2	0	0	0	0	0	26	28	0	0	1	0	0	0	0	29
09:30	23	0	3	0	0	0	0	0	26	21	0	2	0	0	0	0	1	24
09:45	21	1	4	1	0	0	0	1	28	15	0	1	0	0	0	0	0	16
Hour	98	1	14	1	0	0	0	2	116	115	0	10	1	0	0	0	1	127
10:00	21	0	3	0	0	0	0	0	24	18	0	0	0	0	0	0	0	18
10:15	12	0	2	2	0	0	0	0	16	14	0	3	2	0	0	0	0	19
10:30	18	1	4	0	0	0	0	1	24	15	0	2	1	0	0	0	0	18
10:45	24	0	2	1	0	0	0	0	27	20	3	1	1	0	0	0	0	25
Hour	75	1	11	3	0	0	0	1	91	67	3	6	4	0	0	0	0	80
11:00	26	0	1	2	0	0	0	3	32	15	0	1	0	0	0	0	0	16
11:15	24	1	5	0	0	0	0	0	30	21	1	2	0	0	0	0	0	24
11:30	36	0	4	0	0	0	0	1	41	18	0	2	1	0	0	0	0	21
11:45	24	0	2	1	0	0	0	1	28	26	0	0	3	0	0	0	0	29
Hour	110	1	12	3	0	0	0	5	131	80	1	5	4	0	0	0	0	90
12:00	22	0	1	1	0	0	0	1	25	29	0	1	0	0	0	0	0	30
12:15	17	0	0	0	0	0	0	1	18	25	0	9	0	0	0	0	0	34
12:30	17	0	4	0	0	0	0	0	21	20	0	2	0	0	0	0	0	22
12:45	13	2	4	0	0	0	0	1	20	22	0	3	0	0	0	0	1	26
Hour	69	2	9	1	0	0	0	3	84	96	0	15	0	0	0	0	1	112
13:00	25	0	2	0	0	0	0	0	27	28	0	3	1	0	1	0	0	33
13:15	14	0	2	0	0	0	0	1	17	30	0	3	0	0	0	1	2	36
13:30	17	1	4	0	0	0	0	0	22	26	0	1	0	0	0	0	0	27
13:45	40	2	0	0	0	0	0	0	42	28	1	2	0	0	0	0	0	31
Hour	96	3	8	0	0	0	0	1	108	112	1	9	1	0	1	1	2	127
14:00	21	0	2	0	0	0	0	1	24	43	0	1	0	0	0	0	1	45
14:15	20	0	1	0	0	0	0	0	21	25	0	2	0	0	0	1	1	29
14:30	25	0	0	0	0	0	0	0	25	30	2	1	0	0	0	0	1	34
14:45	28	3	2	0	0	0	0	1	34	27	0	2	0	0	0	0	2	31
Hour	94	3	5	0	0	0	0	2	104	125	2	6	0	0	0	1	5	139
15:00	20	2	0	0	0	0	0	0	22	23	2	0	0	0	0	0	0	25
15:15	28	0	2	0	0	0	0	0	30	29	0	1	0	0	1	0	1	32
15:30	27	0	2	1	0	0	0	0	30	30	0	3	0	0	0	0	0	33
15:45	39	1	4	2	0	1	0	1	48	22	0	4	1	0	0	0	1	28
Hour	114	3	8	3	0	1	0	1	130	104	2	8	1	0	1	0	2	118
16:00	29	1	6	2	0	0	1	0	39	40	0	2	0	0	1	0	1	44
16:15	40	3	5	0	0	2	0	1	51	27	0	4	0	0	0	0	0	31
16:30	33	1	4	0	0	0	2	0	40	34	1	6	1	0	0	0	0	42
16:45	51	0	9	0	0	0	0	2	62	36	0	1	0	0	0	0	0	37
Hour	153	5	24	2	0	2	3	3	192	137	1	13	1	0	1	0	1	154
17:00	40	0	6	0	0	0	0	1	47	44	0	2	0	0	0	0	3	49
17:15	56	1	4	0	0	0	0	2	63	38	2	3	0	0	0	0	2	45
17:30	65	0	6	0	0	0	0	1	72	35	0	1	0	0	0	0	1	37
17:45	104	2	3	0	0	0	0	4	113	33	0	0	0	1	0	0	1	35
Hour	265	3	19	0	0	0	0	8	295	150	2	6	0	1	0	0	7	166
18:00	85	0	5	0	0	0	0	3	93	53	1	0	0	0	0	2	1	57
18:15	62	0	8	1	0	0	0	0	71	32	0	1	1	0	0	0	0	34
18:30	49	0	3	0	0	0	0	6	58	39	0	1	0	0	0	0	2	42
18:45	53	0	2	0	0	0	0	2	57	32	0	0	0	0	0	0	0	32
Hour	249	0	18	1	0	0	0	11	279	156	1	2	1	0	0	2	3	165
Total	1513	25	141	14	0	5	4	40	1742	1563	22	107	16	1	4	4	24	1741

Site No. 1
Location R822 / R113(W) / Kellystown Rd / R113(E)
Date Tuesday 23 April 2024

Time	To Arm C - Kellystown Rd								Veh. Total	From Arm C - Kellystown Rd								Veh. Total
	CAR	TAXI	LGV	OGV1	OGV2	PSV	M/C	P/C		CAR	TAXI	LGV	OGV1	OGV2	PSV	M/C	P/C	
07:00	8	0	2	0	0	0	0	0	10	10	0	1	0	0	0	0	0	11
07:15	6	3	0	1	0	0	0	0	10	9	1	1	0	0	0	0	2	13
07:30	21	2	2	0	0	0	0	1	26	22	3	1	1	0	0	0	0	27
07:45	21	1	3	0	0	0	0	1	26	24	1	2	0	0	0	0	1	28
Hour	56	6	7	1	0	0	0	2	72	65	5	5	1	0	0	0	3	79
08:00	19	0	1	0	0	0	0	0	20	26	0	0	0	0	0	0	2	28
08:15	9	1	1	0	0	0	0	1	12	23	1	2	0	0	0	0	2	28
08:30	10	0	1	0	0	0	0	1	12	24	0	3	0	0	0	0	0	27
08:45	10	0	3	0	0	0	0	0	13	13	1	0	0	0	0	0	1	15
Hour	48	1	6	0	0	0	0	2	57	86	2	5	0	0	0	0	5	98
09:00	19	1	2	0	0	0	0	0	22	18	1	4	0	0	0	0	0	23
09:15	7	0	4	1	0	0	0	0	12	8	0	1	0	0	0	0	0	9
09:30	9	0	1	1	0	0	0	0	11	14	1	3	0	0	0	0	0	18
09:45	7	0	0	0	0	0	0	0	7	12	1	0	1	0	0	0	0	14
Hour	42	1	7	2	0	0	0	0	52	52	3	8	1	0	0	0	0	64
10:00	9	1	1	1	0	0	0	0	12	3	0	0	0	0	0	0	0	3
10:15	6	0	1	0	0	0	0	0	7	7	1	0	0	0	0	0	1	9
10:30	14	0	3	0	0	0	0	0	17	10	0	1	0	0	0	0	0	11
10:45	8	2	3	0	0	0	0	1	14	3	0	0	0	0	0	0	0	3
Hour	37	3	8	1	0	0	0	1	50	23	1	1	0	0	0	0	1	26
11:00	11	0	2	1	0	0	0	0	14	8	0	0	0	0	0	0	0	8
11:15	13	0	4	0	0	0	0	0	17	11	0	3	2	0	0	0	0	16
11:30	13	1	2	0	0	0	0	3	19	11	0	3	0	0	0	0	0	14
11:45	14	0	3	1	0	0	0	0	18	8	2	3	2	0	0	0	0	15
Hour	51	1	11	2	0	0	0	3	68	38	2	9	4	0	0	0	0	53
12:00	5	0	0	0	0	0	0	0	5	26	0	1	0	0	0	0	0	27
12:15	15	0	2	1	0	0	1	0	19	12	0	0	0	0	0	1	0	13
12:30	11	0	3	0	0	0	1	1	16	9	0	2	1	0	0	0	0	12
12:45	12	0	1	0	0	0	0	0	13	5	1	1	1	0	0	0	1	9
Hour	43	0	6	1	0	0	2	1	53	52	1	4	2	0	0	1	1	61
13:00	10	1	5	0	0	0	1	0	17	18	1	4	0	0	0	1	1	25
13:15	17	2	0	0	0	0	0	0	19	10	2	4	0	1	0	0	0	17
13:30	22	2	0	1	0	0	0	0	25	10	0	0	0	0	0	0	0	10
13:45	19	1	4	1	0	0	0	0	25	17	1	2	0	0	0	0	0	20
Hour	68	6	9	2	0	0	1	0	86	55	4	10	0	1	0	1	1	72
14:00	22	0	2	1	0	0	1	0	26	14	2	3	1	0	0	0	0	20
14:15	17	1	2	0	0	0	0	0	20	20	1	3	0	0	0	2	0	26
14:30	18	1	2	0	0	0	0	0	21	14	0	0	1	0	0	0	0	15
14:45	19	0	5	0	0	0	1	1	26	18	0	4	1	0	0	1	0	24
Hour	76	2	11	1	0	0	2	1	93	66	3	10	3	0	0	3	0	85
15:00	16	2	3	0	0	0	0	2	23	25	3	3	0	0	0	0	0	31
15:15	16	1	2	0	0	0	0	0	19	18	0	1	0	0	0	0	0	19
15:30	16	2	1	0	0	0	1	1	21	16	1	1	0	0	0	1	0	19
15:45	12	0	4	1	0	0	0	0	17	17	0	3	0	0	0	0	0	20
Hour	60	5	10	1	0	0	1	3	80	76	4	8	0	0	0	1	0	89
16:00	25	3	0	0	0	0	0	0	28	22	0	1	1	0	0	0	1	25
16:15	26	0	2	0	0	0	0	0	28	22	0	1	0	0	0	0	1	24
16:30	17	0	2	0	0	0	0	4	23	20	0	3	0	0	0	0	0	23
16:45	34	1	4	0	0	0	1	0	40	35	0	2	0	0	0	0	1	38
Hour	102	4	8	0	0	0	1	4	119	99	0	7	1	0	0	0	3	110
17:00	33	0	0	0	0	0	1	0	34	28	1	2	0	0	0	1	0	32
17:15	31	1	0	1	0	0	0	1	34	31	1	1	0	0	0	0	1	34
17:30	24	0	1	0	0	0	0	1	26	19	0	1	0	0	0	0	1	21
17:45	15	0	1	0	0	0	0	5	21	21	0	2	1	0	0	0	1	25
Hour	103	1	2	1	0	0	1	7	115	99	2	6	1	0	0	1	3	112
18:00	23	0	2	0	1	0	0	0	26	16	1	0	0	0	0	0	1	18
18:15	13	0	1	0	0	1	0	2	17	14	0	2	0	0	0	1	0	17
18:30	11	2	2	0	0	5	0	2	22	11	0	0	0	0	0	0	2	13
18:45	11	3	0	0	0	4	0	1	19	17	4	2	0	0	0	0	0	23
Hour	58	5	5	0	1	10	0	5	84	58	5	4	0	0	0	1	3	71
Total	744	35	90	12	1	10	8	29	929	769	32	77	13	1	0	8	20	920

Site No. 1
Location R822 / R113(W) / Kellystown Rd / R113(E)
Date Tuesday 23 April 2024

Time	To Arm D - R113(E)								Veh. Total	From Arm D - R113(E)								Veh. Total
	CAR	TAXI	LGV	OGV1	OGV2	PSV	M/C	P/C		CAR	TAXI	LGV	OGV1	OGV2	PSV	M/C	P/C	
07:00	19	2	2	2	0	0	0	0	25	15	0	2	2	0	0	1	1	21
07:15	16	1	0	2	1	0	0	0	20	26	3	2	3	0	0	0	2	36
07:30	22	2	5	0	0	0	0	0	29	30	0	3	3	0	0	0	3	39
07:45	46	0	6	0	0	0	0	2	54	53	1	3	0	0	0	0	2	59
Hour	103	5	13	4	1	0	0	2	128	124	4	10	8	0	0	1	8	155
08:00	57	1	5	0	0	0	0	3	66	62	0	6	0	0	0	0	0	68
08:15	72	2	8	2	0	1	0	1	86	63	0	1	0	0	0	0	1	65
08:30	41	1	2	1	0	1	0	0	46	64	0	6	0	0	0	0	3	73
08:45	39	0	7	1	0	0	0	0	47	44	0	2	0	0	2	0	0	48
Hour	209	4	22	4	0	2	0	4	245	233	0	15	0	0	2	0	4	254
09:00	42	0	5	1	0	0	0	1	49	36	1	3	1	1	0	0	1	43
09:15	61	1	10	1	0	0	0	0	73	40	0	4	2	1	0	0	0	47
09:30	34	0	9	2	0	0	0	1	46	40	3	1	0	0	1	0	0	45
09:45	29	0	3	0	0	0	0	0	32	22	2	4	1	0	0	0	1	30
Hour	166	1	27	4	0	0	0	2	200	138	6	12	4	2	1	0	2	165
10:00	32	1	3	0	0	0	0	1	37	33	1	2	1	0	0	0	0	37
10:15	24	0	7	0	0	0	1	0	32	20	1	1	0	0	0	0	0	22
10:30	36	1	5	2	1	0	1	0	46	35	2	3	2	0	0	0	1	43
10:45	28	1	4	0	0	0	0	0	33	27	0	2	0	0	0	1	1	31
Hour	120	3	19	2	1	0	2	1	148	115	4	8	3	0	0	1	2	133
11:00	31	0	5	1	0	0	0	0	37	30	0	0	0	0	0	0	1	31
11:15	43	0	5	1	0	0	1	0	50	33	0	8	1	0	0	0	1	43
11:30	32	0	3	0	0	0	0	1	36	38	0	0	0	0	0	0	0	38
11:45	46	1	4	3	1	0	0	0	55	37	0	2	1	0	0	1	3	44
Hour	152	1	17	5	1	0	1	1	178	138	0	10	2	0	0	1	5	156
12:00	41	0	6	1	0	0	1	1	50	23	0	5	3	0	0	2	2	35
12:15	38	1	5	1	0	0	0	0	45	40	1	1	1	0	0	0	1	44
12:30	35	1	7	1	0	0	2	0	46	39	0	4	2	0	0	0	2	47
12:45	33	0	3	1	0	1	1	2	41	31	2	1	1	0	0	0	0	35
Hour	147	2	21	4	0	1	4	3	182	133	3	11	7	0	0	2	5	161
13:00	28	2	4	1	0	1	1	0	37	48	0	3	0	0	0	0	0	51
13:15	35	0	1	2	0	0	1	2	41	35	2	1	1	0	0	0	0	39
13:30	40	0	3	1	0	0	0	0	44	50	0	4	2	0	0	0	0	56
13:45	37	1	4	1	1	2	1	1	48	44	1	1	1	0	0	2	1	50
Hour	140	3	12	5	1	3	3	3	170	177	3	9	4	0	0	2	1	196
14:00	45	0	8	1	0	0	0	1	55	32	1	3	2	0	0	1	1	40
14:15	37	2	4	0	0	0	2	2	47	36	1	1	0	1	0	0	0	39
14:30	45	1	1	1	0	0	0	1	49	50	1	0	0	0	1	0	2	54
14:45	50	1	1	1	0	0	0	0	53	44	1	2	1	0	0	0	1	49
Hour	177	4	14	3	0	0	2	4	204	162	4	6	3	1	1	1	4	182
15:00	48	2	2	0	0	0	0	2	54	37	4	1	1	0	0	0	2	45
15:15	41	0	3	1	0	1	0	0	46	34	0	2	0	0	0	0	0	36
15:30	48	1	8	0	0	0	1	0	58	39	0	2	2	0	0	0	1	44
15:45	62	0	6	0	0	0	1	1	70	45	0	3	3	0	1	1	1	54
Hour	199	3	19	1	0	1	2	3	228	155	4	8	6	0	1	1	4	179
16:00	54	0	6	1	0	0	0	1	62	40	2	5	3	0	0	0	1	51
16:15	51	1	8	0	0	0	0	1	61	49	2	3	0	0	1	0	0	55
16:30	70	0	7	0	0	0	1	0	78	47	0	2	0	0	0	1	1	51
16:45	48	0	5	0	0	0	0	1	54	64	0	5	1	0	0	0	0	70
Hour	223	1	26	1	0	0	1	3	255	200	4	15	4	0	1	1	2	227
17:00	63	0	8	1	0	0	0	4	76	55	0	3	0	0	0	0	3	61
17:15	71	3	2	0	1	0	0	2	79	55	2	0	0	0	0	0	2	59
17:30	70	0	6	0	0	0	0	1	77	54	1	5	2	0	0	1	1	64
17:45	45	1	3	0	0	0	2	7	58	68	2	1	0	0	0	0	3	74
Hour	249	4	19	1	1	0	2	14	290	232	5	9	2	0	0	1	9	258
18:00	64	0	2	1	0	0	2	3	72	72	1	1	0	0	0	1	3	78
18:15	52	0	6	0	0	0	3	0	61	47	1	2	0	1	1	2	0	54
18:30	55	0	5	0	0	0	0	1	61	47	1	2	0	0	0	0	6	56
18:45	53	3	2	0	0	0	2	1	61	47	3	0	0	0	0	0	1	51
Hour	224	3	15	1	0	0	7	5	255	213	6	5	0	1	1	3	10	239
Total	2109	34	224	35	5	7	24	45	2483	2020	43	118	43	4	7	14	56	2305

Site No. 2
Location Thicknock Hl / Blackglen Rd(W) / Blackglen Rd(E)
Date Tuesday 23 April 2024

Time	A to C - Thicknock Hl to Blackglen Rd(E)								Veh. Total	A to B - Thicknock Hl to Blackglen Rd(W)								Veh. Total
	CAR	TAXI	LGV	OGV1	OGV2	PSV	M/C	P/C		CAR	TAXI	LGV	OGV1	OGV2	PSV	M/C	P/C	
07:00	1	0	1	0	0	0	0	0	2	7	0	1	0	0	0	0	0	8
07:15	5	0	0	0	0	0	0	0	5	9	1	0	0	0	0	0	0	10
07:30	9	1	0	0	0	0	0	0	10	15	0	2	0	0	0	0	0	17
07:45	10	0	0	0	0	0	0	0	10	17	0	2	0	0	0	0	0	19
Hour	25	1	1	0	0	0	0	0	27	48	1	5	0	0	0	0	0	54
08:00	7	0	0	0	0	0	0	0	7	25	0	0	0	0	0	0	0	25
08:15	10	0	0	0	0	0	1	0	11	20	0	0	0	0	0	0	0	20
08:30	9	0	1	0	0	0	0	0	10	19	0	0	0	0	0	0	0	19
08:45	7	0	0	0	0	0	0	0	7	14	0	0	0	0	0	0	0	14
Hour	33	0	1	0	0	0	1	0	35	78	0	0	0	0	0	0	0	78
09:00	5	0	0	0	0	0	0	0	5	16	0	2	1	0	0	0	0	19
09:15	1	0	1	0	0	0	0	0	2	9	0	0	0	0	0	0	0	9
09:30	1	0	0	0	0	0	0	0	1	11	1	0	0	0	0	0	0	12
09:45	2	0	0	0	0	0	0	0	2	6	0	1	0	0	0	0	0	7
Hour	9	0	1	0	0	0	0	0	10	42	1	3	1	0	0	0	0	47
10:00	1	0	0	0	0	0	0	0	1	5	0	4	0	0	0	0	0	9
10:15	1	0	0	0	0	0	0	0	1	3	0	1	0	0	0	0	0	4
10:30	2	0	0	0	0	0	0	0	2	7	1	0	0	0	0	0	0	8
10:45	1	0	0	0	0	0	0	0	1	6	0	0	0	0	0	1	0	7
Hour	5	0	0	0	0	0	0	0	5	21	1	5	0	0	0	1	0	28
11:00	1	0	0	0	0	0	0	0	1	5	0	1	0	0	0	0	0	6
11:15	1	1	0	0	0	0	0	0	2	11	0	1	0	0	0	0	0	12
11:30	4	0	0	0	0	0	0	0	4	8	0	0	0	0	0	0	0	8
11:45	1	1	1	0	0	0	0	0	3	9	0	0	0	0	0	0	0	9
Hour	7	2	1	0	0	0	0	0	10	33	0	2	0	0	0	0	0	35
12:00	0	0	0	0	0	0	1	0	1	6	0	2	1	0	0	0	0	9
12:15	5	0	0	0	0	0	0	0	5	5	0	1	0	0	0	0	0	6
12:30	3	0	0	0	0	0	0	0	3	10	0	0	0	0	0	0	0	10
12:45	0	0	1	0	0	0	0	0	1	10	0	0	0	0	0	0	0	10
Hour	8	0	1	0	0	0	1	0	10	31	0	3	1	0	0	0	0	35
13:00	4	0	0	0	0	0	0	0	4	9	0	1	0	0	0	0	0	10
13:15	3	0	2	0	0	0	0	0	5	9	1	1	0	0	0	0	0	11
13:30	2	0	0	0	0	0	0	0	2	9	0	0	1	0	0	0	0	10
13:45	2	0	0	0	0	0	0	0	2	9	0	0	0	0	0	1	0	10
Hour	11	0	2	0	0	0	0	0	13	36	1	2	1	0	0	1	0	41
14:00	7	0	0	0	0	0	0	0	7	13	1	1	0	0	0	1	0	16
14:15	4	0	0	0	0	0	0	0	4	12	0	0	0	0	0	0	0	12
14:30	3	0	1	0	0	0	0	0	4	8	1	1	0	0	0	0	0	10
14:45	2	0	0	0	0	0	0	0	2	9	0	0	0	0	0	0	0	9
Hour	16	0	1	0	0	0	0	0	17	42	2	2	0	0	0	1	0	47
15:00	2	0	0	0	0	0	0	0	2	4	1	1	0	0	0	0	0	6
15:15	1	0	0	0	0	0	0	0	1	6	0	0	0	0	0	0	0	6
15:30	4	0	0	0	0	0	0	0	4	6	0	3	0	0	0	0	0	9
15:45	2	0	2	0	0	0	0	0	4	5	0	2	0	0	0	0	0	7
Hour	9	0	2	0	0	0	0	0	11	21	1	6	0	0	0	0	0	28
16:00	5	0	0	0	0	0	0	0	5	10	0	0	0	0	0	0	1	11
16:15	1	2	1	0	0	0	0	0	4	9	1	1	0	0	0	0	0	11
16:30	3	0	0	0	0	0	0	0	3	12	0	0	1	0	0	0	0	13
16:45	5	0	0	0	0	0	0	0	5	13	0	0	0	0	0	0	0	13
Hour	14	2	1	0	0	0	0	0	17	44	1	1	1	0	0	0	1	48
17:00	3	0	0	0	0	0	0	0	3	12	0	1	0	0	0	0	0	13
17:15	5	0	0	0	0	0	0	0	5	14	1	3	0	0	0	0	0	18
17:30	3	0	0	0	0	0	0	0	3	6	0	3	0	0	0	0	1	10
17:45	0	0	1	0	0	0	0	0	1	13	0	0	0	0	0	0	0	13
Hour	11	0	1	0	0	0	0	0	12	45	1	7	0	0	0	0	1	54
18:00	4	0	0	0	0	0	0	0	4	11	0	0	0	0	0	1	0	12
18:15	3	0	0	0	0	0	0	1	4	10	0	0	0	0	0	0	0	10
18:30	2	0	1	0	0	0	0	0	3	7	0	0	0	0	0	0	0	7
18:45	1	0	0	0	0	0	0	0	1	12	2	0	0	0	0	0	0	14
Hour	10	0	1	0	0	0	0	1	12	40	2	0	0	0	0	1	0	43
Total	158	5	13	0	0	0	2	1	179	481	11	36	4	0	0	4	2	538

Site No. 2
Location Thicknock Hl / Blackglen Rd(W) / Blackglen Rd(E)
Date Tuesday 23 April 2024

Time	B to A - Blackglen Rd(W) to Thicknock Hl								Veh. Total	B to C - Blackglen Rd(W) to Blackglen Rd(E)								Veh. Total
	CAR	TAXI	LGV	OGV1	OGV2	PSV	M/C	P/C		CAR	TAXI	LGV	OGV1	OGV2	PSV	M/C	P/C	
07:00	1	2	0	0	0	0	0	0	3	12	0	2	2	0	0	0	2	18
07:15	4	0	0	0	0	0	0	0	4	16	1	0	2	0	0	0	1	20
07:30	8	0	0	0	0	0	0	0	8	20	4	3	1	0	0	0	1	29
07:45	11	0	2	0	0	0	0	0	13	35	0	6	1	0	0	0	1	43
Hour	24	2	2	0	0	0	0	0	28	83	5	11	6	0	0	0	5	110
08:00	7	0	0	0	0	0	0	2	9	51	0	5	0	0	0	0	2	58
08:15	8	0	0	0	0	0	0	0	8	65	1	7	1	0	1	0	0	75
08:30	10	1	1	1	0	0	0	0	13	44	0	4	0	0	1	0	0	49
08:45	5	0	0	0	0	0	0	0	5	36	0	5	1	0	0	0	2	44
Hour	30	1	1	1	0	0	0	2	35	196	1	21	2	0	2	0	4	226
09:00	8	0	1	0	0	0	0	0	9	29	0	4	0	0	0	0	0	33
09:15	20	1	2	0	0	0	0	0	23	35	0	8	2	0	0	0	1	46
09:30	8	0	1	0	0	0	0	0	9	35	0	3	4	0	0	0	0	42
09:45	5	0	0	0	0	0	0	0	5	23	0	3	0	0	0	0	1	27
Hour	41	1	4	0	0	0	0	0	46	122	0	18	6	0	0	0	2	148
10:00	2	1	2	0	0	0	0	1	6	24	0	2	0	0	0	0	1	27
10:15	6	0	1	0	0	0	0	0	7	15	0	4	2	0	0	1	0	22
10:30	5	1	1	0	0	0	0	0	7	22	0	3	2	1	1	1	2	32
10:45	4	1	0	0	0	0	0	0	5	20	0	3	1	0	0	0	1	25
Hour	17	3	4	0	0	0	0	1	25	81	0	12	5	1	1	2	4	106
11:00	7	0	1	0	0	0	0	0	8	19	0	3	2	0	0	0	1	25
11:15	7	0	2	0	0	0	0	0	9	39	0	5	0	0	0	1	1	46
11:30	5	1	0	0	0	0	0	0	6	32	0	1	1	0	0	0	2	36
11:45	12	0	2	1	0	0	0	0	15	29	0	3	0	0	0	0	0	32
Hour	31	1	5	1	0	0	0	0	38	119	0	12	3	0	0	1	4	139
12:00	12	0	1	0	0	0	0	0	13	35	0	3	1	0	0	1	0	40
12:15	12	0	1	0	0	0	0	0	13	26	1	3	2	1	0	0	0	33
12:30	4	0	2	1	0	0	1	0	8	34	1	3	0	0	0	0	0	38
12:45	4	0	1	1	0	0	0	0	6	29	0	2	1	0	1	0	2	35
Hour	32	0	5	2	0	0	1	0	40	124	2	11	4	1	1	1	2	146
13:00	6	1	3	0	0	0	0	0	10	17	1	3	0	0	1	1	1	24
13:15	9	0	0	0	0	0	0	0	9	24	0	3	0	0	1	2	2	32
13:30	12	0	0	0	0	0	0	0	12	22	0	2	0	0	0	0	0	24
13:45	4	0	0	0	0	0	0	0	4	33	0	6	1	0	2	1	0	43
Hour	31	1	3	0	0	0	0	0	35	96	1	14	1	0	4	4	3	123
14:00	14	0	0	0	0	0	0	0	14	31	0	9	2	0	0	0	2	44
14:15	16	1	0	0	0	0	1	0	18	27	0	3	1	0	0	1	1	33
14:30	9	0	1	0	0	0	0	0	10	32	0	0	0	0	0	0	0	32
14:45	13	1	1	1	0	0	0	0	16	23	0	1	0	0	0	0	0	24
Hour	52	2	2	1	0	0	1	0	58	113	0	13	3	0	0	1	3	133
15:00	5	2	0	0	0	0	0	0	7	25	0	2	1	0	0	0	0	28
15:15	8	0	1	1	0	0	0	1	11	34	0	0	0	0	2	0	2	38
15:30	12	0	2	0	0	0	0	1	15	29	0	1	0	0	0	1	0	31
15:45	19	0	2	0	0	0	1	0	22	40	0	4	0	0	0	0	1	45
Hour	44	2	5	1	0	0	1	2	55	128	0	7	1	0	2	1	3	142
16:00	15	0	1	0	0	0	0	0	16	31	0	2	0	0	0	0	2	35
16:15	19	1	1	0	0	0	0	0	21	31	0	5	2	0	0	0	0	38
16:30	13	0	2	0	0	0	0	0	15	39	0	7	1	0	0	1	1	49
16:45	8	0	0	1	0	0	0	0	9	31	0	5	0	0	0	0	3	39
Hour	55	1	4	1	0	0	0	0	61	132	0	19	3	0	0	1	6	161
17:00	13	0	3	0	0	0	0	0	16	36	0	5	0	0	0	1	2	44
17:15	24	0	0	0	0	0	0	2	26	36	1	5	1	0	0	0	4	47
17:30	27	0	1	0	0	0	0	0	28	37	0	7	0	0	0	0	2	46
17:45	16	0	0	0	0	0	0	0	16	36	1	5	0	0	0	2	5	49
Hour	80	0	4	0	0	0	0	2	86	145	2	22	1	0	0	3	13	186
18:00	16	0	0	0	0	0	1	1	18	34	0	2	0	0	0	0	1	37
18:15	14	0	0	0	0	0	0	1	15	35	0	1	1	0	0	2	0	39
18:30	23	0	6	0	0	0	0	0	29	27	0	2	0	0	0	0	0	29
18:45	14	3	1	0	0	0	0	0	18	29	0	3	0	0	0	2	2	36
Hour	67	3	7	0	0	0	1	2	80	125	0	8	1	0	0	4	3	141
Total	504	17	46	7	0	0	4	9	587	1464	11	168	36	2	10	18	52	1761

Site No. 2
Location Thicknock Hl / Blackglen Rd(W) / Blackglen Rd(E)
Date Tuesday 23 April 2024

Time	C to B - Blackglen Rd(E) to Blackglen Rd(W)								Veh. Total	C to A - Blackglen Rd(E) to Thicknock Hl								Veh. Total
	CAR	TAXI	LGV	OGV1	OGV2	PSV	M/C	P/C		CAR	TAXI	LGV	OGV1	OGV2	PSV	M/C	P/C	
07:00	8	0	3	1	0	0	1	1	14	1	0	1	0	0	0	0	0	2
07:15	17	1	3	0	0	0	0	4	25	0	1	0	0	0	0	0	0	1
07:30	12	0	1	2	0	0	0	0	15	0	0	0	0	0	0	0	0	0
07:45	20	1	2	0	0	0	0	1	24	1	0	0	1	0	0	0	0	2
Hour	57	2	9	3	0	0	1	6	78	2	1	1	1	0	0	0	0	5
08:00	31	0	4	0	0	0	0	0	35	3	0	0	0	0	0	0	0	3
08:15	34	0	1	0	0	0	0	1	36	8	0	1	0	0	0	0	0	9
08:30	18	0	2	0	0	0	0	2	22	3	0	0	0	0	0	0	0	3
08:45	13	0	2	0	0	1	0	1	17	1	0	0	0	0	0	0	0	1
Hour	96	0	9	0	0	1	0	4	110	15	0	1	0	0	0	0	0	16
09:00	25	1	1	0	0	1	0	1	29	6	0	1	0	0	0	0	0	7
09:15	28	0	3	0	0	0	0	0	31	6	0	0	0	0	0	0	0	6
09:30	27	2	3	1	0	0	0	1	34	2	0	0	0	0	0	0	0	2
09:45	19	2	4	1	0	0	0	2	28	0	0	0	1	0	0	0	0	1
Hour	99	5	11	2	0	1	0	4	122	14	0	1	1	0	0	0	0	16
10:00	16	0	3	1	0	0	0	0	20	1	0	0	0	0	0	0	0	1
10:15	28	1	2	0	0	1	0	0	32	4	0	0	0	0	0	0	0	4
10:30	23	1	4	1	0	0	0	1	30	1	0	0	0	0	0	0	0	1
10:45	13	0	6	0	0	0	0	2	21	3	0	1	0	0	0	0	0	4
Hour	80	2	15	2	0	1	0	3	103	9	0	1	0	0	0	0	0	10
11:00	27	1	3	0	0	0	0	2	33	1	0	0	0	0	0	0	0	1
11:15	18	0	9	1	0	0	0	0	28	4	1	0	0	0	0	0	0	5
11:30	25	0	2	0	0	0	0	0	27	3	1	0	0	0	0	0	0	4
11:45	24	0	2	2	0	0	0	3	31	3	0	0	0	0	0	0	0	3
Hour	94	1	16	3	0	0	0	5	119	11	2	0	0	0	0	0	0	13
12:00	22	0	6	1	0	0	2	3	34	4	0	0	0	0	0	0	0	4
12:15	37	1	2	4	0	0	0	1	45	2	0	0	0	0	0	0	0	2
12:30	26	1	4	2	0	0	0	2	35	2	1	0	0	0	0	0	0	3
12:45	15	1	2	0	0	0	0	1	19	0	0	0	0	0	0	0	0	0
Hour	100	3	14	7	0	0	2	7	133	8	1	0	0	0	0	0	0	9
13:00	31	0	4	0	0	1	0	1	37	5	0	0	0	0	0	0	0	5
13:15	22	1	1	2	0	0	0	1	27	3	1	0	0	0	0	0	0	4
13:30	39	0	5	1	0	0	0	0	45	1	0	0	0	0	0	0	0	1
13:45	33	0	1	2	0	0	0	2	38	3	0	0	0	0	0	0	0	3
Hour	125	1	11	5	0	1	0	4	147	12	1	0	0	0	0	0	0	13
14:00	22	0	3	0	0	0	1	0	26	0	0	1	0	0	0	0	0	1
14:15	29	1	2	1	0	0	0	0	33	4	0	1	0	0	0	0	0	5
14:30	33	0	4	0	0	2	0	3	42	5	0	2	0	0	0	0	0	7
14:45	28	0	2	1	0	0	0	4	35	3	1	1	0	0	0	0	0	5
Hour	112	1	11	2	0	2	1	7	136	12	1	5	0	0	0	0	0	18
15:00	31	1	0	1	0	0	0	0	33	3	0	0	0	0	0	0	0	3
15:15	31	0	5	1	0	0	0	0	37	3	0	1	0	0	0	0	0	4
15:30	29	0	5	2	0	1	0	1	38	2	0	0	0	0	0	0	0	2
15:45	31	0	2	0	0	0	1	2	36	1	0	1	0	0	0	0	0	2
Hour	122	1	12	4	0	1	1	3	144	9	0	2	0	0	0	0	0	11
16:00	37	3	7	2	0	0	0	2	51	2	0	1	0	0	0	0	0	3
16:15	34	0	2	0	0	1	0	1	38	3	0	0	0	0	0	0	1	4
16:30	42	0	5	1	0	0	1	0	49	1	0	0	0	0	0	0	0	1
16:45	39	0	5	0	0	0	0	2	46	1	0	0	0	0	0	0	0	1
Hour	152	3	19	3	0	1	1	5	184	7	0	1	0	0	0	0	1	9
17:00	41	0	5	0	0	0	0	7	53	6	0	0	0	0	0	0	0	6
17:15	39	1	4	2	0	0	0	3	49	5	0	0	0	0	0	0	0	5
17:30	51	0	3	1	1	0	0	2	58	3	0	0	0	0	0	1	0	4
17:45	55	2	1	0	0	0	0	2	60	7	0	0	0	0	0	0	0	7
Hour	186	3	13	3	1	0	0	14	220	21	0	0	0	0	0	1	0	22
18:00	58	1	3	0	0	0	0	5	67	4	0	0	0	0	0	0	0	4
18:15	46	1	4	0	0	1	2	2	56	6	0	0	0	0	0	0	0	6
18:30	35	1	2	0	0	0	1	6	45	3	0	0	0	0	0	0	0	3
18:45	40	1	3	1	0	0	0	3	48	2	0	0	0	0	0	0	0	2
Hour	179	4	12	1	0	1	3	16	216	15	0	0	0	0	0	0	0	15
Total	1402	26	152	35	1	9	9	78	1712	135	6	12	2	0	0	1	1	157

Site No. 2
Location Thicknock Hl / Blackglen Rd(W) / Blackglen Rd(E)
Date Tuesday 23 April 2024

Time	To Arm A - Thicknock Hl								Veh. Total	From Arm A - Thicknock Hl								Veh. Total
	CAR	TAXI	LGV	OGV1	OGV2	PSV	M/C	P/C		CAR	TAXI	LGV	OGV1	OGV2	PSV	M/C	P/C	
07:00	2	2	1	0	0	0	0	0	5	8	0	2	0	0	0	0	0	10
07:15	4	1	0	0	0	0	0	0	5	14	1	0	0	0	0	0	0	15
07:30	8	0	0	0	0	0	0	0	8	24	1	2	0	0	0	0	0	27
07:45	12	0	2	1	0	0	0	0	15	27	0	2	0	0	0	0	0	29
Hour	26	3	3	1	0	0	0	0	33	73	2	6	0	0	0	0	0	81
08:00	10	0	0	0	0	0	0	2	12	32	0	0	0	0	0	0	0	32
08:15	16	0	1	0	0	0	0	0	17	30	0	0	0	0	0	1	0	31
08:30	13	1	1	1	0	0	0	0	16	28	0	1	0	0	0	0	0	29
08:45	6	0	0	0	0	0	0	0	6	21	0	0	0	0	0	0	0	21
Hour	45	1	2	1	0	0	0	2	51	111	0	1	0	0	0	1	0	113
09:00	14	0	2	0	0	0	0	0	16	21	0	2	1	0	0	0	0	24
09:15	26	1	2	0	0	0	0	0	29	10	0	1	0	0	0	0	0	11
09:30	10	0	1	0	0	0	0	0	11	12	1	0	0	0	0	0	0	13
09:45	5	0	0	1	0	0	0	0	6	8	0	1	0	0	0	0	0	9
Hour	55	1	5	1	0	0	0	0	62	51	1	4	1	0	0	0	0	57
10:00	3	1	2	0	0	0	0	1	7	6	0	4	0	0	0	0	0	10
10:15	10	0	1	0	0	0	0	0	11	4	0	1	0	0	0	0	0	5
10:30	6	1	1	0	0	0	0	0	8	9	1	0	0	0	0	0	0	10
10:45	7	1	1	0	0	0	0	0	9	7	0	0	0	0	0	1	0	8
Hour	26	3	5	0	0	0	0	1	35	26	1	5	0	0	0	1	0	33
11:00	8	0	1	0	0	0	0	0	9	6	0	1	0	0	0	0	0	7
11:15	11	1	2	0	0	0	0	0	14	12	1	1	0	0	0	0	0	14
11:30	8	2	0	0	0	0	0	0	10	12	0	0	0	0	0	0	0	12
11:45	15	0	2	1	0	0	0	0	18	10	1	1	0	0	0	0	0	12
Hour	42	3	5	1	0	0	0	0	51	40	2	3	0	0	0	0	0	45
12:00	16	0	1	0	0	0	0	0	17	6	0	2	1	0	0	1	0	10
12:15	14	0	1	0	0	0	0	0	15	10	0	1	0	0	0	0	0	11
12:30	6	1	2	1	0	0	1	0	11	13	0	0	0	0	0	0	0	13
12:45	4	0	1	1	0	0	0	0	6	10	0	1	0	0	0	0	0	11
Hour	40	1	5	2	0	0	1	0	49	39	0	4	1	0	0	1	0	45
13:00	11	1	3	0	0	0	0	0	15	13	0	1	0	0	0	0	0	14
13:15	12	1	0	0	0	0	0	0	13	12	1	3	0	0	0	0	0	16
13:30	13	0	0	0	0	0	0	0	13	11	0	0	1	0	0	0	0	12
13:45	7	0	0	0	0	0	0	0	7	11	0	0	0	0	0	1	0	12
Hour	43	2	3	0	0	0	0	0	48	47	1	4	1	0	0	1	0	54
14:00	14	0	1	0	0	0	0	0	15	20	1	1	0	0	0	1	0	23
14:15	20	1	1	0	0	0	1	0	23	16	0	0	0	0	0	0	0	16
14:30	14	0	3	0	0	0	0	0	17	11	1	2	0	0	0	0	0	14
14:45	16	2	2	1	0	0	0	0	21	11	0	0	0	0	0	0	0	11
Hour	64	3	7	1	0	0	1	0	76	58	2	3	0	0	0	1	0	64
15:00	8	2	0	0	0	0	0	0	10	6	1	1	0	0	0	0	0	8
15:15	11	0	2	1	0	0	0	1	15	7	0	0	0	0	0	0	0	7
15:30	14	0	2	0	0	0	0	1	17	10	0	3	0	0	0	0	0	13
15:45	20	0	3	0	0	0	1	0	24	7	0	4	0	0	0	0	0	11
Hour	53	2	7	1	0	0	1	2	66	30	1	8	0	0	0	0	0	39
16:00	17	0	2	0	0	0	0	0	19	15	0	0	0	0	0	0	1	16
16:15	22	1	1	0	0	0	0	1	25	10	3	2	0	0	0	0	0	15
16:30	14	0	2	0	0	0	0	0	16	15	0	0	1	0	0	0	0	16
16:45	9	0	0	1	0	0	0	0	10	18	0	0	0	0	0	0	0	18
Hour	62	1	5	1	0	0	0	1	70	58	3	2	1	0	0	0	1	65
17:00	19	0	3	0	0	0	0	0	22	15	0	1	0	0	0	0	0	16
17:15	29	0	0	0	0	0	0	2	31	19	1	3	0	0	0	0	0	23
17:30	30	0	1	0	0	0	1	0	32	9	0	3	0	0	0	0	1	13
17:45	23	0	0	0	0	0	0	0	23	13	0	1	0	0	0	0	0	14
Hour	101	0	4	0	0	0	1	2	108	56	1	8	0	0	0	0	1	66
18:00	20	0	0	0	0	0	1	1	22	15	0	0	0	0	0	1	0	16
18:15	20	0	0	0	0	0	0	1	21	13	0	0	0	0	0	0	1	14
18:30	26	0	6	0	0	0	0	0	32	9	0	1	0	0	0	0	0	10
18:45	16	3	1	0	0	0	0	0	20	13	2	0	0	0	0	0	0	15
Hour	82	3	7	0	0	0	1	2	95	50	2	1	0	0	0	1	1	55
Total	639	23	58	9	0	0	5	10	744	639	16	49	4	0	0	6	3	717

Site No. 2
Location Thicknock Hl / Blackglen Rd(W) / Blackglen Rd(E)
Date Tuesday 23 April 2024

Time	To Arm B - Blackglen Rd(W)								Veh. Total	From Arm B - Blackglen Rd(W)								Veh. Total
	CAR	TAXI	LGV	OGV1	OGV2	PSV	M/C	P/C		CAR	TAXI	LGV	OGV1	OGV2	PSV	M/C	P/C	
07:00	15	0	4	1	0	0	1	1	22	13	2	2	2	0	0	0	2	21
07:15	26	2	3	0	0	0	0	4	35	20	1	0	2	0	0	0	1	24
07:30	27	0	3	2	0	0	0	0	32	28	4	3	1	0	0	0	1	37
07:45	37	1	4	0	0	0	0	1	43	46	0	8	1	0	0	0	1	56
Hour	105	3	14	3	0	0	1	6	132	107	7	13	6	0	0	0	5	138
08:00	56	0	4	0	0	0	0	0	60	58	0	5	0	0	0	0	4	67
08:15	54	0	1	0	0	0	0	1	56	73	1	7	1	0	1	0	0	83
08:30	37	0	2	0	0	0	0	2	41	54	1	5	1	0	1	0	0	62
08:45	27	0	2	0	0	1	0	1	31	41	0	5	1	0	0	0	2	49
Hour	174	0	9	0	0	1	0	4	188	226	2	22	3	0	2	0	6	261
09:00	41	1	3	1	0	1	0	1	48	37	0	5	0	0	0	0	0	42
09:15	37	0	3	0	0	0	0	0	40	55	1	10	2	0	0	0	1	69
09:30	38	3	3	1	0	0	0	1	46	43	0	4	4	0	0	0	0	51
09:45	25	2	5	1	0	0	0	2	35	28	0	3	0	0	0	0	1	32
Hour	141	6	14	3	0	1	0	4	169	163	1	22	6	0	0	0	2	194
10:00	21	0	7	1	0	0	0	0	29	26	1	4	0	0	0	0	2	33
10:15	31	1	3	0	0	1	0	0	36	21	0	5	2	0	0	1	0	29
10:30	30	2	4	1	0	0	0	1	38	27	1	4	2	1	1	1	2	39
10:45	19	0	6	0	0	0	1	2	28	24	1	3	1	0	0	0	1	30
Hour	101	3	20	2	0	1	1	3	131	98	3	16	5	1	1	2	5	131
11:00	32	1	4	0	0	0	0	2	39	26	0	4	2	0	0	0	1	33
11:15	29	0	10	1	0	0	0	0	40	46	0	7	0	0	0	1	1	55
11:30	33	0	2	0	0	0	0	0	35	37	1	1	1	0	0	0	2	42
11:45	33	0	2	2	0	0	0	3	40	41	0	5	1	0	0	0	0	47
Hour	127	1	18	3	0	0	0	5	154	150	1	17	4	0	0	1	4	177
12:00	28	0	8	2	0	0	2	3	43	47	0	4	1	0	0	1	0	53
12:15	42	1	3	4	0	0	0	1	51	38	1	4	2	1	0	0	0	46
12:30	36	1	4	2	0	0	0	2	45	38	1	5	1	0	0	1	0	46
12:45	25	1	2	0	0	0	0	1	29	33	0	3	2	0	1	0	2	41
Hour	131	3	17	8	0	0	2	7	168	156	2	16	6	1	1	2	2	186
13:00	40	0	5	0	0	1	0	1	47	23	2	6	0	0	1	1	1	34
13:15	31	2	2	2	0	0	0	1	38	33	0	3	0	0	1	2	2	41
13:30	48	0	5	2	0	0	0	0	55	34	0	2	0	0	0	0	0	36
13:45	42	0	1	2	0	0	1	2	48	37	0	6	1	0	2	1	0	47
Hour	161	2	13	6	0	1	1	4	188	127	2	17	1	0	4	4	3	158
14:00	35	1	4	0	0	0	2	0	42	45	0	9	2	0	0	0	2	58
14:15	41	1	2	1	0	0	0	0	45	43	1	3	1	0	0	2	1	51
14:30	41	1	5	0	0	2	0	3	52	41	0	1	0	0	0	0	0	42
14:45	37	0	2	1	0	0	0	4	44	36	1	2	1	0	0	0	0	40
Hour	154	3	13	2	0	2	2	7	183	165	2	15	4	0	0	2	3	191
15:00	35	2	1	1	0	0	0	0	39	30	2	2	1	0	0	0	0	35
15:15	37	0	5	1	0	0	0	0	43	42	0	1	1	0	2	0	3	49
15:30	35	0	8	2	0	1	0	1	47	41	0	3	0	0	0	1	1	46
15:45	36	0	4	0	0	0	1	2	43	59	0	6	0	0	0	1	1	67
Hour	143	2	18	4	0	1	1	3	172	172	2	12	2	0	2	2	5	197
16:00	47	3	7	2	0	0	0	3	62	46	0	3	0	0	0	0	2	51
16:15	43	1	3	0	0	1	0	1	49	50	1	6	2	0	0	0	0	59
16:30	54	0	5	2	0	0	1	0	62	52	0	9	1	0	0	1	1	64
16:45	52	0	5	0	0	0	0	2	59	39	0	5	1	0	0	0	3	48
Hour	196	4	20	4	0	1	1	6	232	187	1	23	4	0	0	1	6	222
17:00	53	0	6	0	0	0	0	7	66	49	0	8	0	0	0	1	2	60
17:15	53	2	7	2	0	0	0	3	67	60	1	5	1	0	0	0	6	73
17:30	57	0	6	1	1	0	0	3	68	64	0	8	0	0	0	0	2	74
17:45	68	2	1	0	0	0	0	2	73	52	1	5	0	0	0	2	5	65
Hour	231	4	20	3	1	0	0	15	274	225	2	26	1	0	0	3	15	272
18:00	69	1	3	0	0	0	1	5	79	50	0	2	0	0	0	1	2	55
18:15	56	1	4	0	0	1	2	2	66	49	0	1	1	0	0	2	1	54
18:30	42	1	2	0	0	0	1	6	52	50	0	8	0	0	0	0	0	58
18:45	52	3	3	1	0	0	0	3	62	43	3	4	0	0	0	2	2	54
Hour	219	6	12	1	0	1	4	16	259	192	3	15	1	0	0	5	5	221
Total	1883	37	188	39	1	9	13	80	2250	1968	28	214	43	2	10	22	61	2348

Site No. 2
Location Thicknock Hl / Blackglen Rd(W) / Blackglen Rd(E)
Date Tuesday 23 April 2024

Time	To Arm C - Blackglen Rd(E)								Veh. Total	From Arm C - Blackglen Rd(E)								Veh. Total
	CAR	TAXI	LGV	OGV1	OGV2	PSV	M/C	P/C		CAR	TAXI	LGV	OGV1	OGV2	PSV	M/C	P/C	
07:00	13	0	3	2	0	0	0	2	20	9	0	4	1	0	0	1	1	16
07:15	21	1	0	2	0	0	0	1	25	17	2	3	0	0	0	0	4	26
07:30	29	5	3	1	0	0	0	1	39	12	0	1	2	0	0	0	0	15
07:45	45	0	6	1	0	0	0	1	53	21	1	2	1	0	0	0	1	26
Hour	108	6	12	6	0	0	0	5	137	59	3	10	4	0	0	1	6	83
08:00	58	0	5	0	0	0	0	2	65	34	0	4	0	0	0	0	0	38
08:15	75	1	7	1	0	1	1	0	86	42	0	2	0	0	0	0	1	45
08:30	53	0	5	0	0	1	0	0	59	21	0	2	0	0	0	0	2	25
08:45	43	0	5	1	0	0	0	2	51	14	0	2	0	0	1	0	1	18
Hour	229	1	22	2	0	2	1	4	261	111	0	10	0	0	1	0	4	126
09:00	34	0	4	0	0	0	0	0	38	31	1	2	0	0	1	0	1	36
09:15	36	0	9	2	0	0	0	1	48	34	0	3	0	0	0	0	0	37
09:30	36	0	3	4	0	0	0	0	43	29	2	3	1	0	0	0	1	36
09:45	25	0	3	0	0	0	0	1	29	19	2	4	2	0	0	0	2	29
Hour	131	0	19	6	0	0	0	2	158	113	5	12	3	0	1	0	4	138
10:00	25	0	2	0	0	0	0	1	28	17	0	3	1	0	0	0	0	21
10:15	16	0	4	2	0	0	1	0	23	32	1	2	0	0	1	0	0	36
10:30	24	0	3	2	1	1	1	2	34	24	1	4	1	0	0	0	1	31
10:45	21	0	3	1	0	0	0	1	26	16	0	7	0	0	0	0	2	25
Hour	86	0	12	5	1	1	2	4	111	89	2	16	2	0	1	0	3	113
11:00	20	0	3	2	0	0	0	1	26	28	1	3	0	0	0	0	2	34
11:15	40	1	5	0	0	0	1	1	48	22	1	9	1	0	0	0	0	33
11:30	36	0	1	1	0	0	0	2	40	28	1	2	0	0	0	0	0	31
11:45	30	1	4	0	0	0	0	0	35	27	0	2	2	0	0	0	3	34
Hour	126	2	13	3	0	0	1	4	149	105	3	16	3	0	0	0	5	132
12:00	35	0	3	1	0	0	2	0	41	26	0	6	1	0	0	2	3	38
12:15	31	1	3	2	1	0	0	0	38	39	1	2	4	0	0	0	1	47
12:30	37	1	3	0	0	0	0	0	41	28	2	4	2	0	0	0	2	38
12:45	29	0	3	1	0	1	0	2	36	15	1	2	0	0	0	0	1	19
Hour	132	2	12	4	1	1	2	2	156	108	4	14	7	0	0	2	7	142
13:00	21	1	3	0	0	1	1	1	28	36	0	4	0	0	1	0	1	42
13:15	27	0	5	0	0	1	2	2	37	25	2	1	2	0	0	0	1	31
13:30	24	0	2	0	0	0	0	0	26	40	0	5	1	0	0	0	0	46
13:45	35	0	6	1	0	2	1	0	45	36	0	1	2	0	0	0	2	41
Hour	107	1	16	1	0	4	4	3	136	137	2	11	5	0	1	0	4	160
14:00	38	0	9	2	0	0	0	2	51	22	0	4	0	0	0	1	0	27
14:15	31	0	3	1	0	0	1	1	37	33	1	3	1	0	0	0	0	38
14:30	35	0	1	0	0	0	0	0	36	38	0	6	0	0	2	0	3	49
14:45	25	0	1	0	0	0	0	0	26	31	1	3	1	0	0	0	4	40
Hour	129	0	14	3	0	0	1	3	150	124	2	16	2	0	2	1	7	154
15:00	27	0	2	1	0	0	0	0	30	34	1	0	1	0	0	0	0	36
15:15	35	0	0	0	0	2	0	2	39	34	0	6	1	0	0	0	0	41
15:30	33	0	1	0	0	0	1	0	35	31	0	5	2	0	1	0	1	40
15:45	42	0	6	0	0	0	0	1	49	32	0	3	0	0	0	1	2	38
Hour	137	0	9	1	0	2	1	3	153	131	1	14	4	0	1	1	3	155
16:00	36	0	2	0	0	0	0	2	40	39	3	8	2	0	0	0	2	54
16:15	32	2	6	2	0	0	0	0	42	37	0	2	0	0	1	0	2	42
16:30	42	0	7	1	0	0	1	1	52	43	0	5	1	0	0	1	0	50
16:45	36	0	5	0	0	0	0	3	44	40	0	5	0	0	0	0	2	47
Hour	146	2	20	3	0	0	1	6	178	159	3	20	3	0	1	1	6	193
17:00	39	0	5	0	0	0	1	2	47	47	0	5	0	0	0	0	7	59
17:15	41	1	5	1	0	0	0	4	52	44	1	4	2	0	0	0	3	54
17:30	40	0	7	0	0	0	0	2	49	54	0	3	1	1	0	1	2	62
17:45	36	1	6	0	0	0	2	5	50	62	2	1	0	0	0	0	2	67
Hour	156	2	23	1	0	0	3	13	198	207	3	13	3	1	0	1	14	242
18:00	38	0	2	0	0	0	0	1	41	62	1	3	0	0	0	0	5	71
18:15	38	0	1	1	0	0	2	1	43	52	1	4	0	0	1	2	2	62
18:30	29	0	3	0	0	0	0	0	32	38	1	2	0	0	0	1	6	48
18:45	30	0	3	0	0	0	2	2	37	42	1	3	1	0	0	0	3	50
Hour	135	0	9	1	0	0	4	4	153	194	4	12	1	0	1	3	16	231
Total	1622	16	181	36	2	10	20	53	1940	1537	32	164	37	1	9	10	79	1869

Site No. 3
Location R113(W) / Woodside Rd / R113(E)
Date Tuesday 23 April 2024

Time	A to C - R113(W) to R113(E)								Veh. Total	A to B - R113(W) to Woodside Rd								Veh. Total
	CAR	TAXI	LGV	OGV1	OGV2	PSV	M/C	P/C		CAR	TAXI	LGV	OGV1	OGV2	PSV	M/C	P/C	
07:00	33	1	8	2	0	1	0	2	47	2	0	0	0	0	0	0	0	2
07:15	45	1	2	1	0	0	0	2	51	1	0	0	0	0	0	0	0	1
07:30	62	4	8	2	0	0	0	1	77	2	0	0	0	0	0	0	0	2
07:45	78	1	4	2	0	1	1	2	89	2	0	0	0	0	0	0	0	2
Hour	218	7	22	7	0	2	1	7	264	7	0	0	0	0	0	0	0	7
08:00	87	0	8	0	0	0	0	2	97	6	0	1	0	0	0	0	0	7
08:15	105	4	5	1	0	1	1	0	117	13	0	1	0	0	0	0	0	14
08:30	81	3	7	0	0	2	0	0	93	18	1	1	0	0	0	0	0	20
08:45	60	2	6	1	0	0	0	1	70	10	0	0	1	0	0	0	1	12
Hour	333	9	26	2	0	3	1	3	377	47	1	3	1	0	0	0	1	53
09:00	46	0	6	0	0	0	0	0	52	6	0	0	0	0	0	0	0	6
09:15	48	1	7	2	0	0	0	0	58	2	0	1	0	0	0	0	1	4
09:30	40	0	6	2	0	1	0	1	50	2	0	1	0	0	0	0	0	3
09:45	42	1	5	1	0	0	0	0	49	1	0	1	0	0	0	0	1	3
Hour	176	2	24	5	0	1	0	1	209	11	0	3	0	0	0	0	2	16
10:00	32	1	0	0	0	0	0	1	34	0	0	0	0	0	0	0	0	0
10:15	23	2	2	2	0	0	2	1	32	4	0	0	0	0	0	0	0	4
10:30	35	1	4	2	0	2	1	2	47	1	0	0	0	1	0	0	0	2
10:45	39	1	4	2	0	0	0	1	47	3	0	1	0	1	0	0	0	5
Hour	129	5	10	6	0	2	3	5	160	8	0	1	0	2	0	0	0	11
11:00	17	0	4	2	0	0	0	0	23	3	0	1	0	0	0	0	0	4
11:15	50	1	7	0	0	0	0	1	59	6	0	0	0	0	0	1	0	7
11:30	47	1	1	0	0	1	0	1	51	2	0	0	0	0	0	0	0	2
11:45	38	2	7	1	0	0	0	0	48	1	0	2	0	0	0	0	1	4
Hour	152	4	19	3	0	1	0	2	181	12	0	3	0	0	0	1	1	17
12:00	41	2	3	1	0	0	0	0	47	4	0	1	0	0	0	0	0	5
12:15	41	0	4	2	1	0	0	0	48	3	0	0	0	0	0	0	0	3
12:30	44	2	3	0	0	1	1	0	51	1	0	0	0	0	0	0	0	1
12:45	39	1	6	1	0	1	0	2	50	6	0	1	0	0	0	0	0	7
Hour	165	5	16	4	1	2	1	2	196	14	0	2	0	0	0	0	0	16
13:00	35	1	7	1	0	0	1	1	46	7	0	0	0	0	0	0	0	7
13:15	32	3	8	1	0	1	2	2	49	4	0	0	0	0	0	0	0	4
13:30	39	1	1	0	0	1	0	0	42	2	0	0	0	0	0	0	0	2
13:45	48	0	8	1	0	1	1	0	59	4	0	0	0	0	0	0	0	4
Hour	154	5	24	3	0	3	4	3	196	17	0	0	0	0	0	0	0	17
14:00	36	2	6	2	0	0	0	2	48	6	0	1	0	0	0	0	0	7
14:15	39	0	5	0	0	0	1	1	46	5	0	0	0	0	0	0	0	5
14:30	37	1	2	1	0	1	0	0	42	5	0	0	0	0	0	0	0	5
14:45	34	0	4	0	0	0	0	0	38	5	0	0	0	0	0	0	0	5
Hour	146	3	17	3	0	1	1	3	174	21	0	1	0	0	0	0	0	22
15:00	36	0	4	1	0	0	0	0	41	4	1	0	0	0	0	0	0	5
15:15	37	0	2	0	0	1	0	3	43	2	0	0	0	0	0	0	0	2
15:30	41	0	2	2	0	0	1	0	46	7	0	0	0	0	0	0	0	7
15:45	47	1	3	0	0	0	1	0	52	5	0	2	0	0	0	0	1	8
Hour	161	1	11	3	0	1	2	3	182	18	1	2	0	0	0	0	1	22
16:00	44	0	1	0	0	0	0	2	47	10	0	3	0	0	0	0	0	13
16:15	40	2	6	2	0	0	0	0	50	2	0	1	0	0	0	0	0	3
16:30	49	0	6	1	0	0	0	1	57	3	0	1	0	0	0	1	0	5
16:45	39	0	4	0	0	0	0	3	46	8	0	0	0	0	0	0	0	8
Hour	172	2	17	3	0	0	0	6	200	23	0	5	0	0	0	1	0	29
17:00	52	1	9	0	0	1	0	2	65	7	0	0	0	0	0	1	0	8
17:15	54	0	2	1	0	0	0	4	61	7	0	0	0	0	0	0	0	7
17:30	50	2	3	0	0	1	1	2	59	5	0	4	0	0	0	0	0	9
17:45	42	2	5	0	0	0	0	3	52	5	1	2	0	0	0	2	0	10
Hour	198	5	19	1	0	2	1	11	237	24	1	6	0	0	0	3	0	34
18:00	50	0	3	0	0	0	0	2	55	3	0	0	0	0	0	1	0	4
18:15	40	0	0	1	0	0	0	2	43	10	0	0	0	0	0	2	0	12
18:30	46	0	2	0	0	0	0	0	48	5	0	0	0	0	0	0	0	5
18:45	37	1	4	0	0	1	1	2	46	6	0	2	0	0	0	1	0	9
Hour	173	1	9	1	0	1	1	6	192	24	0	2	0	0	0	4	0	30
Total	2177	49	214	41	1	19	15	52	2568	226	3	28	1	2	0	9	5	274

Site No. 3
Location R113(W) / Woodside Rd / R113(E)
Date Tuesday 23 April 2024

Time	B to A - Woodside Rd to R113(W)								Veh. Total	B to C - Woodside Rd to R113(E)								Veh. Total
	CAR	TAXI	LGV	OGV1	OGV2	PSV	M/C	P/C		CAR	TAXI	LGV	OGV1	OGV2	PSV	M/C	P/C	
07:00	1	0	0	0	0	0	1	0	2	0	0	0	0	0	0	0	0	0
07:15	1	0	0	0	0	0	0	2	3	0	0	0	0	0	0	0	0	0
07:30	3	0	1	0	0	0	0	0	4	1	0	0	0	0	1	0	0	2
07:45	3	0	0	0	0	0	0	0	3	0	0	0	0	0	0	0	0	0
Hour	8	0	1	0	0	0	1	2	12	1	0	0	0	0	1	0	0	2
08:00	2	0	0	0	0	0	0	0	2	1	0	0	0	0	0	0	0	1
08:15	5	0	0	0	0	0	0	0	5	3	0	0	0	0	0	0	0	3
08:30	4	0	0	0	0	0	0	1	5	1	0	2	0	0	1	0	0	4
08:45	4	0	1	0	0	0	0	0	5	1	0	0	0	0	0	0	0	1
Hour	15	0	1	0	0	0	0	1	17	6	0	2	0	0	1	0	0	9
09:00	5	0	0	0	0	0	0	0	5	1	0	0	0	0	0	0	0	1
09:15	1	0	2	1	0	0	0	1	5	0	0	0	0	0	0	0	0	0
09:30	7	0	0	0	0	0	0	0	7	0	0	1	0	0	1	0	0	2
09:45	1	0	1	0	0	0	0	1	3	0	0	1	0	0	0	0	0	1
Hour	14	0	3	1	0	0	0	2	20	1	0	2	0	0	1	0	0	4
10:00	2	0	0	0	0	0	0	0	2	2	0	0	0	0	0	0	0	2
10:15	4	0	1	0	0	0	0	0	5	1	0	0	0	0	0	0	0	1
10:30	3	0	0	0	0	0	0	1	4	1	0	0	0	0	0	0	0	1
10:45	5	0	0	0	0	0	0	1	6	0	0	0	0	0	0	0	0	0
Hour	14	0	1	0	0	0	0	2	17	4	0	0	0	0	0	0	0	4
11:00	1	0	0	0	0	0	0	0	1	1	0	0	0	0	0	0	1	2
11:15	1	0	1	0	0	0	0	0	2	0	0	0	0	0	0	0	0	0
11:30	2	0	0	0	0	0	0	0	2	2	0	1	0	0	0	0	0	3
11:45	2	0	1	1	0	0	0	0	4	1	0	0	0	0	0	0	0	1
Hour	6	0	2	1	0	0	0	0	9	4	0	1	0	0	0	0	1	6
12:00	1	0	0	0	0	0	0	1	2	0	0	0	0	0	0	0	0	0
12:15	3	0	0	0	0	0	0	0	3	1	0	2	0	0	0	0	0	3
12:30	1	0	1	0	0	0	0	2	4	2	0	1	0	1	0	0	0	4
12:45	1	0	1	1	0	0	0	0	3	0	0	0	1	0	0	0	0	1
Hour	6	0	2	1	0	0	0	3	12	3	0	3	1	1	0	0	0	8
13:00	2	0	1	0	0	0	0	1	4	0	0	1	0	0	0	0	0	1
13:15	2	0	0	0	0	0	0	0	2	1	0	0	0	0	0	0	0	1
13:30	2	0	0	0	0	0	0	0	2	1	0	0	0	0	0	0	0	1
13:45	1	0	0	0	0	0	0	0	1	1	0	0	0	0	0	0	1	2
Hour	7	0	1	0	0	0	0	1	9	3	0	1	0	0	0	0	1	5
14:00	3	0	0	0	0	0	0	0	3	2	0	0	0	0	0	0	0	2
14:15	2	0	1	0	0	0	0	0	3	2	0	0	0	0	0	0	0	2
14:30	5	0	0	0	0	0	0	1	6	1	0	1	0	0	0	0	0	2
14:45	7	0	0	0	0	0	0	1	8	2	0	1	0	0	0	0	1	4
Hour	17	0	1	0	0	0	0	2	20	7	0	2	0	0	0	0	1	10
15:00	3	0	0	0	0	0	0	0	3	0	0	1	0	0	0	0	0	1
15:15	4	0	1	0	0	0	0	0	5	1	0	1	0	0	0	0	0	2
15:30	3	0	1	0	0	0	1	0	5	0	0	0	0	0	0	0	0	0
15:45	4	0	0	0	0	0	0	0	4	2	0	0	0	0	0	0	0	2
Hour	14	0	2	0	0	0	1	0	17	3	0	2	0	0	0	0	0	5
16:00	1	0	2	0	0	0	0	0	3	2	0	0	0	0	0	0	0	2
16:15	2	0	1	0	0	0	0	0	3	0	0	0	0	0	0	0	0	0
16:30	2	0	1	0	0	0	0	0	3	0	0	0	0	0	0	0	0	0
16:45	6	0	1	0	0	0	0	0	7	2	0	0	0	0	1	0	0	3
Hour	11	0	5	0	0	0	0	0	16	4	0	0	0	0	1	0	0	5
17:00	1	0	0	0	0	0	0	1	2	0	0	1	0	0	0	0	0	1
17:15	4	0	1	0	0	0	0	0	5	2	0	0	0	0	0	0	0	2
17:30	5	0	0	0	0	0	0	0	5	3	0	0	0	0	0	0	0	3
17:45	4	0	0	0	0	0	0	0	4	1	0	0	0	0	0	0	1	2
Hour	14	0	1	0	0	0	0	1	16	6	0	1	0	0	0	0	1	8
18:00	7	0	0	0	0	0	2	1	10	2	0	0	0	0	0	0	0	2
18:15	2	0	1	0	0	0	0	0	3	0	0	0	0	0	1	0	0	1
18:30	3	0	1	0	0	0	1	1	6	1	0	0	0	0	0	0	0	1
18:45	3	0	0	0	0	0	0	1	4	0	0	0	0	0	0	0	0	0
Hour	15	0	2	0	0	0	3	3	23	3	0	0	0	0	1	0	0	4
Total	141	0	22	3	0	0	5	17	188	45	0	14	1	1	5	0	4	70

Site No. 3
Location R113(W) / Woodside Rd / R113(E)
Date Tuesday 23 April 2024

Time	C to B - R113(E) to Woodside Rd								Veh. Total	C to A - R113(E) to R113(W)								Veh. Total
	CAR	TAXI	LGV	OGV1	OGV2	PSV	M/C	P/C		CAR	TAXI	LGV	OGV1	OGV2	PSV	M/C	P/C	
07:00	0	0	0	0	0	0	0	0	0	12	1	4	1	0	0	0	1	19
07:15	1	0	1	0	0	0	0	0	2	16	2	3	0	0	1	0	2	24
07:30	0	0	0	0	0	0	0	0	0	14	1	0	3	0	0	0	0	18
07:45	1	0	0	0	0	1	0	0	2	35	1	1	1	0	0	0	1	39
Hour	2	0	1	0	0	1	0	0	4	77	5	8	5	0	1	0	4	100
08:00	0	0	0	0	0	0	0	0	0	47	1	5	2	0	0	0	0	55
08:15	1	0	2	0	0	0	0	0	3	54	0	2	0	0	1	0	2	59
08:30	1	0	0	0	0	0	0	0	1	40	0	5	0	0	1	0	1	47
08:45	1	0	1	0	0	0	0	0	2	48	2	1	0	0	1	0	1	53
Hour	3	0	3	0	0	0	0	0	6	189	3	13	2	0	3	0	4	214
09:00	0	0	1	0	0	1	0	0	2	50	0	4	0	0	0	0	0	54
09:15	0	0	1	0	0	0	0	0	1	43	3	6	0	0	1	0	0	53
09:30	0	0	1	0	0	0	0	0	1	29	1	5	0	0	1	0	1	37
09:45	1	0	1	0	0	0	0	0	2	28	2	4	2	0	0	0	1	37
Hour	1	0	4	0	0	1	0	0	6	150	6	19	2	0	2	0	2	181
10:00	1	0	0	0	0	0	0	0	1	21	1	4	2	0	0	0	0	28
10:15	1	0	1	0	0	0	0	0	2	33	1	4	0	0	2	1	0	41
10:30	2	0	0	0	0	0	0	0	2	31	1	3	1	0	0	0	1	37
10:45	1	0	0	0	0	0	0	1	2	25	0	7	0	0	0	0	1	33
Hour	5	0	1	0	0	0	0	1	7	110	3	18	3	0	2	1	2	139
11:00	1	0	0	0	0	0	0	0	1	29	1	6	0	0	0	0	2	38
11:15	0	0	0	1	0	0	0	0	1	28	1	10	1	0	1	0	0	41
11:30	1	0	0	0	0	0	0	0	1	35	3	3	0	0	0	0	1	42
11:45	0	0	0	0	0	0	0	0	0	27	1	2	1	0	0	0	3	34
Hour	2	0	0	1	0	0	0	0	3	119	6	21	2	0	1	0	6	155
12:00	3	1	1	0	0	0	0	0	5	34	1	7	1	0	0	0	1	44
12:15	1	0	0	0	0	0	0	0	1	41	0	2	4	0	1	0	1	49
12:30	1	0	0	0	0	0	0	0	1	38	2	5	2	0	0	1	1	49
12:45	1	0	0	0	0	0	0	0	1	25	2	2	0	0	0	0	0	29
Hour	6	1	1	0	0	0	0	0	8	138	5	16	7	0	1	1	3	171
13:00	0	0	1	0	0	0	0	0	1	46	1	4	1	0	1	0	0	53
13:15	2	0	0	0	0	0	0	0	2	33	4	5	1	0	1	0	1	45
13:30	2	0	0	0	0	0	0	0	2	49	0	6	1	0	0	0	0	56
13:45	0	0	0	0	0	0	0	0	0	46	1	3	0	0	0	0	2	52
Hour	4	0	1	0	0	0	0	0	5	174	6	18	3	0	2	0	3	206
14:00	5	0	0	0	0	0	0	0	5	27	1	3	0	0	0	1	0	32
14:15	0	0	1	0	0	0	0	0	1	37	2	4	0	0	1	0	1	45
14:30	6	0	1	0	0	0	0	0	7	41	0	7	0	0	2	0	1	51
14:45	1	0	0	0	0	0	0	0	1	41	2	4	2	0	0	0	4	53
Hour	12	0	2	0	0	0	0	0	14	146	5	18	2	0	3	1	6	181
15:00	1	0	0	0	0	0	0	0	1	40	1	1	1	0	0	0	0	43
15:15	3	0	1	0	0	0	0	0	4	48	0	6	1	0	1	0	0	56
15:30	3	0	1	0	0	0	0	0	4	43	1	4	3	0	1	1	1	54
15:45	2	0	0	0	0	1	0	0	3	47	0	3	1	0	0	0	2	53
Hour	9	0	2	0	0	1	0	0	12	178	2	14	6	0	2	1	3	206
16:00	1	0	0	0	0	0	0	0	1	62	2	8	3	0	0	0	2	77
16:15	4	0	1	0	0	0	0	0	5	42	0	4	0	0	0	0	1	47
16:30	2	0	1	0	0	0	0	0	3	63	1	4	1	0	1	1	0	71
16:45	1	0	1	0	0	0	1	0	3	54	0	7	0	0	0	0	2	63
Hour	8	0	3	0	0	0	1	0	12	221	3	23	4	0	1	1	5	258
17:00	1	0	1	0	0	0	0	0	2	68	0	3	1	0	0	0	5	77
17:15	2	0	0	0	0	0	0	0	2	62	1	3	3	0	1	0	3	73
17:30	4	0	1	0	0	0	0	1	6	72	2	6	0	1	0	1	2	84
17:45	1	0	1	0	0	1	1	0	4	91	3	7	0	0	0	1	4	106
Hour	8	0	3	0	0	1	1	1	14	293	6	19	4	1	1	2	14	340
18:00	4	0	0	0	0	0	0	0	4	70	1	4	0	0	0	0	2	77
18:15	4	0	0	0	0	0	0	0	4	70	1	4	0	0	1	0	1	77
18:30	6	0	1	0	0	0	0	0	7	65	2	5	0	0	1	0	3	76
18:45	6	0	0	0	0	0	0	0	6	52	1	2	2	0	0	0	2	59
Hour	20	0	1	0	0	0	0	0	21	257	5	15	2	0	2	0	8	289
Total	80	1	22	1	0	4	2	2	112	2052	55	202	42	1	21	7	60	2440

Site No. 3
Location R113(W) / Woodside Rd / R113(E)
Date Tuesday 23 April 2024

Time	To Arm A - R113(W)								Veh. Total	From Arm A - R113(W)								Veh. Total
	CAR	TAXI	LGV	OGV1	OGV2	PSV	M/C	P/C		CAR	TAXI	LGV	OGV1	OGV2	PSV	M/C	P/C	
07:00	13	1	4	1	0	0	1	1	21	35	1	8	2	0	1	0	2	49
07:15	17	2	3	0	0	1	0	4	27	46	1	2	1	0	0	0	2	52
07:30	17	1	1	3	0	0	0	0	22	64	4	8	2	0	0	0	1	79
07:45	38	1	1	1	0	0	0	1	42	80	1	4	2	0	1	1	2	91
Hour	85	5	9	5	0	1	1	6	112	225	7	22	7	0	2	1	7	271
08:00	49	1	5	2	0	0	0	0	57	93	0	9	0	0	0	0	2	104
08:15	59	0	2	0	0	1	0	2	64	118	4	6	1	0	1	1	0	131
08:30	44	0	5	0	0	1	0	2	52	99	4	8	0	0	2	0	0	113
08:45	52	2	2	0	0	1	0	1	58	70	2	6	2	0	0	0	2	82
Hour	204	3	14	2	0	3	0	5	231	380	10	29	3	0	3	1	4	430
09:00	55	0	4	0	0	0	0	0	59	52	0	6	0	0	0	0	0	58
09:15	44	3	8	1	0	1	0	1	58	50	1	8	2	0	0	0	1	62
09:30	36	1	5	0	0	1	0	1	44	42	0	7	2	0	1	0	1	53
09:45	29	2	5	2	0	0	0	2	40	43	1	6	1	0	0	0	1	52
Hour	164	6	22	3	0	2	0	4	201	187	2	27	5	0	1	0	3	225
10:00	23	1	4	2	0	0	0	0	30	32	1	0	0	0	0	0	1	34
10:15	37	1	5	0	0	2	1	0	46	27	2	2	2	0	0	2	1	36
10:30	34	1	3	1	0	0	0	2	41	36	1	4	2	1	2	1	2	49
10:45	30	0	7	0	0	0	0	2	39	42	1	5	2	1	0	0	1	52
Hour	124	3	19	3	0	2	1	4	156	137	5	11	6	2	2	3	5	171
11:00	30	1	6	0	0	0	0	2	39	20	0	5	2	0	0	0	0	27
11:15	29	1	11	1	0	1	0	0	43	56	1	7	0	0	0	1	1	66
11:30	37	3	3	0	0	0	0	1	44	49	1	1	0	0	1	0	1	53
11:45	29	1	3	2	0	0	0	3	38	39	2	9	1	0	0	0	1	52
Hour	125	6	23	3	0	1	0	6	164	164	4	22	3	0	1	1	3	198
12:00	35	1	7	1	0	0	0	2	46	45	2	4	1	0	0	0	0	52
12:15	44	0	2	4	0	1	0	1	52	44	0	4	2	1	0	0	0	51
12:30	39	2	6	2	0	0	1	3	53	45	2	3	0	0	1	1	0	52
12:45	26	2	3	1	0	0	0	0	32	45	1	7	1	0	1	0	2	57
Hour	144	5	18	8	0	1	1	6	183	179	5	18	4	1	2	1	2	212
13:00	48	1	5	1	0	1	0	1	57	42	1	7	1	0	0	1	1	53
13:15	35	4	5	1	0	1	0	1	47	36	3	8	1	0	1	2	2	53
13:30	51	0	6	1	0	0	0	0	58	41	1	1	0	0	1	0	0	44
13:45	47	1	3	0	0	0	0	2	53	52	0	8	1	0	1	1	0	63
Hour	181	6	19	3	0	2	0	4	215	171	5	24	3	0	3	4	3	213
14:00	30	1	3	0	0	0	1	0	35	42	2	7	2	0	0	0	2	55
14:15	39	2	5	0	0	1	0	1	48	44	0	5	0	0	0	1	1	51
14:30	46	0	7	0	0	2	0	2	57	42	1	2	1	0	1	0	0	47
14:45	48	2	4	2	0	0	0	5	61	39	0	4	0	0	0	0	0	43
Hour	163	5	19	2	0	3	1	8	201	167	3	18	3	0	1	1	3	196
15:00	43	1	1	1	0	0	0	0	46	40	1	4	1	0	0	0	0	46
15:15	52	0	7	1	0	1	0	0	61	39	0	2	0	0	1	0	3	45
15:30	46	1	5	3	0	1	2	1	59	48	0	2	2	0	0	1	0	53
15:45	51	0	3	1	0	0	0	2	57	52	1	5	0	0	0	1	1	60
Hour	192	2	16	6	0	2	2	3	223	179	2	13	3	0	1	2	4	204
16:00	63	2	10	3	0	0	0	2	80	54	0	4	0	0	0	0	2	60
16:15	44	0	5	0	0	0	0	1	50	42	2	7	2	0	0	0	0	53
16:30	65	1	5	1	0	1	1	0	74	52	0	7	1	0	0	1	1	62
16:45	60	0	8	0	0	0	0	2	70	47	0	4	0	0	0	0	3	54
Hour	232	3	28	4	0	1	1	5	274	195	2	22	3	0	0	1	6	229
17:00	69	0	3	1	0	0	0	6	79	59	1	9	0	0	1	1	2	73
17:15	66	1	4	3	0	1	0	3	78	61	0	2	1	0	0	0	4	68
17:30	77	2	6	0	1	0	1	2	89	55	2	7	0	0	1	1	2	68
17:45	95	3	7	0	0	0	1	4	110	47	3	7	0	0	0	2	3	62
Hour	307	6	20	4	1	1	2	15	356	222	6	25	1	0	2	4	11	271
18:00	77	1	4	0	0	0	2	3	87	53	0	3	0	0	0	1	2	59
18:15	72	1	5	0	0	1	0	1	80	50	0	0	1	0	0	2	2	55
18:30	68	2	6	0	0	1	1	4	82	51	0	2	0	0	0	0	0	53
18:45	55	1	2	2	0	0	0	3	63	43	1	6	0	0	1	2	2	55
Hour	272	5	17	2	0	2	3	11	312	197	1	11	1	0	1	5	6	222
Total	2193	55	224	45	1	21	12	77	2628	2403	52	242	42	3	19	24	57	2842

Site No. 3
Location R113(W) / Woodside Rd / R113(E)
Date Tuesday 23 April 2024

Time	To Arm B - Woodside Rd								Veh. Total	From Arm B - Woodside Rd								Veh. Total
	CAR	TAXI	LGV	OGV1	OGV2	PSV	M/C	P/C		CAR	TAXI	LGV	OGV1	OGV2	PSV	M/C	P/C	
07:00	2	0	0	0	0	0	0	0	2	1	0	0	0	0	0	1	0	2
07:15	2	0	1	0	0	0	0	0	3	1	0	0	0	0	0	0	2	3
07:30	2	0	0	0	0	0	0	0	2	4	0	1	0	0	1	0	0	6
07:45	3	0	0	0	0	1	0	0	4	3	0	0	0	0	0	0	0	3
Hour	9	0	1	0	0	1	0	0	11	9	0	1	0	0	1	1	2	14
08:00	6	0	1	0	0	0	0	0	7	3	0	0	0	0	0	0	0	3
08:15	14	0	3	0	0	0	0	0	17	8	0	0	0	0	0	0	0	8
08:30	19	1	1	0	0	0	0	0	21	5	0	2	0	0	1	0	1	9
08:45	11	0	1	1	0	0	0	1	14	5	0	1	0	0	0	0	0	6
Hour	50	1	6	1	0	0	0	1	59	21	0	3	0	0	1	0	1	26
09:00	6	0	1	0	0	1	0	0	8	6	0	0	0	0	0	0	0	6
09:15	2	0	2	0	0	0	0	1	5	1	0	2	1	0	0	0	1	5
09:30	2	0	2	0	0	0	0	0	4	7	0	1	0	0	1	0	0	9
09:45	2	0	2	0	0	0	0	1	5	1	0	2	0	0	0	0	1	4
Hour	12	0	7	0	0	1	0	2	22	15	0	5	1	0	1	0	2	24
10:00	1	0	0	0	0	0	0	0	1	4	0	0	0	0	0	0	0	4
10:15	5	0	1	0	0	0	0	0	6	5	0	1	0	0	0	0	0	6
10:30	3	0	0	0	1	0	0	0	4	4	0	0	0	0	0	0	1	5
10:45	4	0	1	0	1	0	0	1	7	5	0	0	0	0	0	0	1	6
Hour	13	0	2	0	2	0	0	1	18	18	0	1	0	0	0	0	2	21
11:00	4	0	1	0	0	0	0	0	5	2	0	0	0	0	0	0	1	3
11:15	6	0	0	1	0	0	1	0	8	1	0	1	0	0	0	0	0	2
11:30	3	0	0	0	0	0	0	0	3	4	0	1	0	0	0	0	0	5
11:45	1	0	2	0	0	0	0	1	4	3	0	1	1	0	0	0	0	5
Hour	14	0	3	1	0	0	1	1	20	10	0	3	1	0	0	0	1	15
12:00	7	1	2	0	0	0	0	0	10	1	0	0	0	0	0	0	1	2
12:15	4	0	0	0	0	0	0	0	4	4	0	2	0	0	0	0	0	6
12:30	2	0	0	0	0	0	0	0	2	3	0	2	0	1	0	0	2	8
12:45	7	0	1	0	0	0	0	0	8	1	0	1	2	0	0	0	0	4
Hour	20	1	3	0	0	0	0	0	24	9	0	5	2	1	0	0	3	20
13:00	7	0	1	0	0	0	0	0	8	2	0	2	0	0	0	0	1	5
13:15	6	0	0	0	0	0	0	0	6	3	0	0	0	0	0	0	0	3
13:30	4	0	0	0	0	0	0	0	4	3	0	0	0	0	0	0	0	3
13:45	4	0	0	0	0	0	0	0	4	2	0	0	0	0	0	0	1	3
Hour	21	0	1	0	0	0	0	0	22	10	0	2	0	0	0	0	2	14
14:00	11	0	1	0	0	0	0	0	12	5	0	0	0	0	0	0	0	5
14:15	5	0	1	0	0	0	0	0	6	4	0	1	0	0	0	0	0	5
14:30	11	0	1	0	0	0	0	0	12	6	0	1	0	0	0	0	1	8
14:45	6	0	0	0	0	0	0	0	6	9	0	1	0	0	0	0	2	12
Hour	33	0	3	0	0	0	0	0	36	24	0	3	0	0	0	0	3	30
15:00	5	1	0	0	0	0	0	0	6	3	0	1	0	0	0	0	0	4
15:15	5	0	1	0	0	0	0	0	6	5	0	2	0	0	0	0	0	7
15:30	10	0	1	0	0	0	0	0	11	3	0	1	0	0	0	1	0	5
15:45	7	0	2	0	0	1	0	1	11	6	0	0	0	0	0	0	0	6
Hour	27	1	4	0	0	1	0	1	34	17	0	4	0	0	0	1	0	22
16:00	11	0	3	0	0	0	0	0	14	3	0	2	0	0	0	0	0	5
16:15	6	0	2	0	0	0	0	0	8	2	0	1	0	0	0	0	0	3
16:30	5	0	2	0	0	0	1	0	8	2	0	1	0	0	0	0	0	3
16:45	9	0	1	0	0	0	1	0	11	8	0	1	0	0	1	0	0	10
Hour	31	0	8	0	0	0	2	0	41	15	0	5	0	0	1	0	0	21
17:00	8	0	1	0	0	0	1	0	10	1	0	1	0	0	0	0	1	3
17:15	9	0	0	0	0	0	0	0	9	6	0	1	0	0	0	0	0	7
17:30	9	0	5	0	0	0	0	1	15	8	0	0	0	0	0	0	0	8
17:45	6	1	3	0	0	1	3	0	14	5	0	0	0	0	0	0	1	6
Hour	32	1	9	0	0	1	4	1	48	20	0	2	0	0	0	0	2	24
18:00	7	0	0	0	0	0	1	0	8	9	0	0	0	0	0	2	1	12
18:15	14	0	0	0	0	0	2	0	16	2	0	1	0	0	1	0	0	4
18:30	11	0	1	0	0	0	0	0	12	4	0	1	0	0	0	1	1	7
18:45	12	0	2	0	0	0	1	0	15	3	0	0	0	0	0	0	1	4
Hour	44	0	3	0	0	0	4	0	51	18	0	2	0	0	1	3	3	27
Total	306	4	50	2	2	4	11	7	386	186	0	36	4	1	5	5	21	258

Site No. 3
Location R113(W) / Woodside Rd / R113(E)
Date Tuesday 23 April 2024

Time	To Arm C - R113(E)								Veh. Total	From Arm C - R113(E)								Veh. Total
	CAR	TAXI	LGV	OGV1	OGV2	PSV	M/C	P/C		CAR	TAXI	LGV	OGV1	OGV2	PSV	M/C	P/C	
07:00	33	1	8	2	0	1	0	2	47	12	1	4	1	0	0	0	1	19
07:15	45	1	2	1	0	0	0	2	51	17	2	4	0	0	1	0	2	26
07:30	63	4	8	2	0	1	0	1	79	14	1	0	3	0	0	0	0	18
07:45	78	1	4	2	0	1	1	2	89	36	1	1	1	0	1	0	1	41
Hour	219	7	22	7	0	3	1	7	266	79	5	9	5	0	2	0	4	104
08:00	88	0	8	0	0	0	0	2	98	47	1	5	2	0	0	0	0	55
08:15	108	4	5	1	0	1	1	0	120	55	0	4	0	0	1	0	2	62
08:30	82	3	9	0	0	3	0	0	97	41	0	5	0	0	1	0	1	48
08:45	61	2	6	1	0	0	0	1	71	49	2	2	0	0	1	0	1	55
Hour	339	9	28	2	0	4	1	3	386	192	3	16	2	0	3	0	4	220
09:00	47	0	6	0	0	0	0	0	53	50	0	5	0	0	1	0	0	56
09:15	48	1	7	2	0	0	0	0	58	43	3	7	0	0	1	0	0	54
09:30	40	0	7	2	0	2	0	1	52	29	1	6	0	0	1	0	1	38
09:45	42	1	6	1	0	0	0	0	50	29	2	5	2	0	0	0	1	39
Hour	177	2	26	5	0	2	0	1	213	151	6	23	2	0	3	0	2	187
10:00	34	1	0	0	0	0	0	1	36	22	1	4	2	0	0	0	0	29
10:15	24	2	2	2	0	0	2	1	33	34	1	5	0	0	2	1	0	43
10:30	36	1	4	2	0	2	1	2	48	33	1	3	1	0	0	0	1	39
10:45	39	1	4	2	0	0	0	1	47	26	0	7	0	0	0	0	2	35
Hour	133	5	10	6	0	2	3	5	164	115	3	19	3	0	2	1	3	146
11:00	18	0	4	2	0	0	0	1	25	30	1	6	0	0	0	0	2	39
11:15	50	1	7	0	0	0	0	1	59	28	1	10	2	0	1	0	0	42
11:30	49	1	2	0	0	1	0	1	54	36	3	3	0	0	0	0	1	43
11:45	39	2	7	1	0	0	0	0	49	27	1	2	1	0	0	0	3	34
Hour	156	4	20	3	0	1	0	3	187	121	6	21	3	0	1	0	6	158
12:00	41	2	3	1	0	0	0	0	47	37	2	8	1	0	0	0	1	49
12:15	42	0	6	2	1	0	0	0	51	42	0	2	4	0	1	0	1	50
12:30	46	2	4	0	1	1	1	0	55	39	2	5	2	0	0	1	1	50
12:45	39	1	6	2	0	1	0	2	51	26	2	2	0	0	0	0	0	30
Hour	168	5	19	5	2	2	1	2	204	144	6	17	7	0	1	1	3	179
13:00	35	1	8	1	0	0	1	1	47	46	1	5	1	0	1	0	0	54
13:15	33	3	8	1	0	1	2	2	50	35	4	5	1	0	1	0	1	47
13:30	40	1	1	0	0	1	0	0	43	51	0	6	1	0	0	0	0	58
13:45	49	0	8	1	0	1	1	1	61	46	1	3	0	0	0	0	2	52
Hour	157	5	25	3	0	3	4	4	201	178	6	19	3	0	2	0	3	211
14:00	38	2	6	2	0	0	0	2	50	32	1	3	0	0	0	1	0	37
14:15	41	0	5	0	0	0	1	1	48	37	2	5	0	0	1	0	1	46
14:30	38	1	3	1	0	1	0	0	44	47	0	8	0	0	2	0	1	58
14:45	36	0	5	0	0	0	0	1	42	42	2	4	2	0	0	0	4	54
Hour	153	3	19	3	0	1	1	4	184	158	5	20	2	0	3	1	6	195
15:00	36	0	5	1	0	0	0	0	42	41	1	1	1	0	0	0	0	44
15:15	38	0	3	0	0	1	0	3	45	51	0	7	1	0	1	0	0	60
15:30	41	0	2	2	0	0	1	0	46	46	1	5	3	0	1	1	1	58
15:45	49	1	3	0	0	0	1	0	54	49	0	3	1	0	1	0	2	56
Hour	164	1	13	3	0	1	2	3	187	187	2	16	6	0	3	1	3	218
16:00	46	0	1	0	0	0	0	2	49	63	2	8	3	0	0	0	2	78
16:15	40	2	6	2	0	0	0	0	50	46	0	5	0	0	0	0	1	52
16:30	49	0	6	1	0	0	0	1	57	65	1	5	1	0	1	1	0	74
16:45	41	0	4	0	0	1	0	3	49	55	0	8	0	0	0	1	2	66
Hour	176	2	17	3	0	1	0	6	205	229	3	26	4	0	1	2	5	270
17:00	52	1	10	0	0	1	0	2	66	69	0	4	1	0	0	0	5	79
17:15	56	0	2	1	0	0	0	4	63	64	1	3	3	0	1	0	3	75
17:30	53	2	3	0	0	1	1	2	62	76	2	7	0	1	0	1	3	90
17:45	43	2	5	0	0	0	0	4	54	92	3	8	0	0	1	2	4	110
Hour	204	5	20	1	0	2	1	12	245	301	6	22	4	1	2	3	15	354
18:00	52	0	3	0	0	0	0	2	57	74	1	4	0	0	0	0	2	81
18:15	40	0	0	1	0	1	0	2	44	74	1	4	0	0	1	0	1	81
18:30	47	0	2	0	0	0	0	0	49	71	2	6	0	0	1	0	3	83
18:45	37	1	4	0	0	1	1	2	46	58	1	2	2	0	0	0	2	65
Hour	176	1	9	1	0	2	1	6	196	277	5	16	2	0	2	0	8	310
Total	2222	49	228	42	2	24	15	56	2638	2132	56	224	43	1	25	9	62	2552

Site No. 4
Location R117(N) / R113(W) / R117(S) / R113(E)
Date Tuesday 23 April 2024

Time	A to D - R117(N) to R113(E)								Veh. Total	A to C - R117(N) to R117(S)								Veh. Total
	CAR	TAXI	LGV	OGV1	OGV2	PSV	M/C	P/C		CAR	TAXI	LGV	OGV1	OGV2	PSV	M/C	P/C	
07:00	0	0	0	0	0	0	0	0	0	13	1	3	2	0	0	0	1	20
07:15	0	0	0	0	0	0	0	0	0	10	1	3	1	0	3	0	3	21
07:30	1	1	0	0	0	0	0	0	2	23	0	1	0	0	0	0	4	28
07:45	0	1	0	0	0	0	0	0	1	24	3	0	0	0	1	0	1	29
Hour	1	2	0	0	0	0	0	0	3	70	5	7	3	0	4	0	9	98
08:00	0	0	0	0	0	0	0	1	1	48	0	2	1	0	2	0	1	54
08:15	2	0	0	0	0	0	0	0	2	46	0	4	2	0	0	0	4	56
08:30	0	0	0	0	0	0	0	0	0	59	1	6	0	0	0	0	2	68
08:45	1	0	0	0	0	0	0	0	1	50	1	2	1	0	0	0	1	55
Hour	3	0	0	0	0	0	0	1	4	203	2	14	4	0	2	0	8	233
09:00	1	0	0	0	0	0	0	0	1	38	1	1	0	0	0	0	2	42
09:15	3	0	0	0	0	0	0	0	3	29	1	0	4	0	0	0	2	36
09:30	0	1	0	0	0	0	0	0	1	27	0	3	3	0	0	0	0	33
09:45	0	0	0	1	0	0	0	0	1	30	2	3	1	3	0	0	0	39
Hour	4	1	0	1	0	0	0	0	6	124	4	7	8	3	0	0	4	150
10:00	1	0	0	0	0	0	0	0	1	24	2	1	1	0	0	0	3	31
10:15	2	0	0	0	0	0	0	0	2	22	3	2	0	1	0	0	1	29
10:30	2	0	0	0	0	0	0	0	2	31	2	1	1	0	0	0	2	37
10:45	1	0	0	0	0	0	0	0	1	25	1	4	1	0	0	0	1	32
Hour	6	0	0	0	0	0	0	0	6	102	8	8	3	1	0	0	7	129
11:00	1	0	0	0	0	0	0	1	2	27	0	4	1	0	0	1	0	33
11:15	4	0	0	0	0	0	0	0	4	27	1	4	1	0	0	0	3	36
11:30	0	0	0	0	0	0	0	0	0	31	2	3	0	0	0	0	3	39
11:45	2	0	1	0	0	0	0	0	3	41	1	2	1	0	1	1	1	48
Hour	7	0	1	0	0	0	0	1	9	126	4	13	3	0	1	2	7	156
12:00	2	1	0	0	0	0	0	0	3	36	2	0	1	0	0	1	1	41
12:15	0	0	0	0	0	0	0	0	0	27	3	5	1	0	0	0	0	36
12:30	4	0	0	0	0	0	0	0	4	37	0	4	0	0	0	1	2	44
12:45	1	0	0	0	0	0	0	1	2	28	0	5	2	1	0	0	3	39
Hour	7	1	0	0	0	0	0	1	9	128	5	14	4	1	0	2	6	160
13:00	3	0	0	0	0	0	0	0	3	32	1	2	4	0	0	0	2	41
13:15	0	0	0	0	0	0	0	0	0	55	0	1	2	1	1	0	3	63
13:30	3	0	1	0	0	0	0	0	4	38	2	5	1	1	0	1	6	54
13:45	0	1	3	0	1	0	0	0	5	31	4	4	0	0	1	0	1	41
Hour	6	1	4	0	1	0	0	0	12	156	7	12	7	2	2	1	12	199
14:00	5	0	0	0	0	0	0	0	5	58	1	3	1	0	0	1	1	65
14:15	2	0	1	0	0	0	0	0	3	43	2	3	2	0	1	0	0	51
14:30	2	0	1	0	0	0	0	0	3	53	2	1	1	0	0	0	0	57
14:45	1	0	0	0	0	0	0	0	1	58	1	2	1	1	0	0	4	67
Hour	10	0	2	0	0	0	0	0	12	212	6	9	5	1	1	1	5	240
15:00	2	0	1	0	0	0	0	1	4	58	1	5	0	1	0	1	3	69
15:15	0	0	0	0	0	0	0	1	1	48	1	3	0	0	0	0	2	54
15:30	6	0	0	0	0	0	0	0	6	41	3	6	0	0	0	1	1	52
15:45	1	0	0	0	0	0	0	0	1	47	1	4	2	1	0	0	2	57
Hour	9	0	1	0	0	0	0	2	12	194	6	18	2	2	0	2	8	232
16:00	1	0	0	0	0	0	0	0	1	85	0	0	0	0	0	1	8	94
16:15	0	0	0	0	0	0	0	0	0	79	1	3	0	0	1	0	6	90
16:30	1	0	0	0	0	0	0	0	1	81	0	5	0	0	0	0	0	86
16:45	1	0	0	0	0	0	1	1	3	91	2	7	0	0	0	1	2	103
Hour	3	0	0	0	0	0	1	1	5	336	3	15	0	0	1	2	16	373
17:00	1	0	0	0	0	0	0	0	1	60	0	18	0	0	0	1	7	86
17:15	5	0	0	0	0	0	0	0	5	78	1	8	1	0	0	1	4	93
17:30	2	0	0	0	0	0	0	0	2	82	3	9	0	0	0	1	13	108
17:45	1	0	0	0	0	0	0	0	1	102	1	3	0	1	0	3	11	121
Hour	9	0	0	0	0	0	0	0	9	322	5	38	1	1	0	6	35	408
18:00	2	0	0	0	0	0	0	0	2	69	0	2	2	0	0	3	9	85
18:15	3	0	0	0	0	0	0	0	3	96	0	3	0	1	0	2	12	114
18:30	2	0	1	0	0	0	0	0	3	67	3	2	0	1	0	2	9	84
18:45	3	0	1	0	0	0	0	0	4	77	2	4	0	0	1	1	8	93
Hour	10	0	2	0	0	0	0	0	12	309	5	11	2	2	1	8	38	376
Total	75	5	10	1	1	0	1	6	99	2282	60	166	42	13	12	24	155	2754

Site No. 4
Location R117(N) / R113(W) / R117(S) / R113(E)
Date Tuesday 23 April 2024

Time	A to B - R117(N) to R113(W)								Veh. Total	B to A - R113(W) to R117(N)								Veh. Total
	CAR	TAXI	LGV	OGV1	OGV2	PSV	M/C	P/C		CAR	TAXI	LGV	OGV1	OGV2	PSV	M/C	P/C	
07:00	6	0	2	0	0	0	0	0	8	9	1	3	0	0	1	0	1	15
07:15	4	0	1	0	0	1	0	0	6	18	0	0	0	0	0	0	1	19
07:30	4	0	0	1	0	0	0	0	5	26	0	2	0	0	1	0	0	29
07:45	11	0	0	0	0	1	0	0	12	32	0	0	0	0	1	0	0	33
Hour	25	0	3	1	0	2	0	0	31	85	1	5	0	0	3	0	2	96
08:00	18	1	1	1	0	0	1	0	22	32	0	4	0	0	0	0	0	36
08:15	17	0	1	0	0	1	0	0	19	30	0	0	0	0	0	1	0	31
08:30	17	0	2	0	0	0	0	0	19	36	0	1	0	0	2	0	0	39
08:45	16	1	1	0	0	0	0	0	18	26	0	3	1	0	0	0	0	30
Hour	68	2	5	1	0	1	1	0	78	124	0	8	1	0	2	1	0	136
09:00	19	0	1	0	0	1	0	0	21	14	0	1	0	0	0	0	0	15
09:15	17	0	1	0	0	1	0	0	19	13	1	2	0	0	0	0	0	16
09:30	13	1	2	0	0	0	0	0	16	14	0	2	1	0	1	0	1	19
09:45	7	1	1	0	0	0	0	1	10	12	1	2	1	0	1	0	0	17
Hour	56	2	5	0	0	2	0	1	66	53	2	7	2	0	2	0	1	67
10:00	0	1	0	1	0	0	1	0	3	7	1	0	0	0	0	0	0	8
10:15	8	0	0	0	0	2	0	0	10	2	1	1	1	0	0	1	0	6
10:30	6	1	1	0	0	0	0	0	8	9	0	1	0	0	2	0	0	12
10:45	12	0	3	0	0	0	0	2	17	6	0	3	1	0	0	0	1	11
Hour	26	2	4	1	0	2	1	2	38	24	2	5	2	0	2	1	1	37
11:00	15	0	3	0	0	0	0	1	19	5	0	1	1	0	0	0	0	7
11:15	8	0	3	1	0	1	0	0	13	16	0	2	0	0	0	0	0	18
11:30	8	2	2	0	0	0	0	0	12	14	1	1	0	0	1	0	1	18
11:45	7	0	1	1	0	0	0	0	9	12	1	2	1	0	0	0	0	16
Hour	38	2	9	2	0	1	0	1	53	47	2	6	2	0	1	0	1	59
12:00	14	0	3	1	0	0	0	0	18	5	2	2	0	0	0	0	0	9
12:15	10	0	1	1	0	1	0	0	13	12	0	2	1	1	0	0	0	16
12:30	10	0	0	1	0	0	1	0	12	14	0	2	0	1	1	0	0	18
12:45	10	1	1	1	0	1	0	0	14	6	1	1	2	0	0	0	0	10
Hour	44	1	5	4	0	2	1	0	57	37	3	7	3	2	1	0	0	53
13:00	11	2	1	1	0	0	0	0	15	17	0	1	1	0	0	0	0	19
13:15	11	1	1	0	0	1	0	0	14	6	2	5	1	0	1	1	0	16
13:30	16	0	3	1	0	0	0	1	21	13	0	0	0	0	1	0	0	14
13:45	12	1	0	0	0	0	0	0	13	11	0	1	1	0	0	0	1	14
Hour	50	4	5	2	0	1	0	1	63	47	2	7	3	0	2	1	1	63
14:00	14	1	2	1	0	0	1	0	19	11	0	3	0	0	0	0	1	15
14:15	7	2	1	0	0	1	0	0	11	13	0	2	0	0	0	0	1	16
14:30	16	0	3	0	0	1	0	0	20	4	1	0	0	0	1	1	0	7
14:45	8	1	0	0	0	0	0	1	10	13	0	1	0	0	0	0	0	14
Hour	45	4	6	1	0	2	1	1	60	41	1	6	0	0	1	1	2	52
15:00	20	0	0	0	0	0	0	0	20	10	0	2	0	0	0	0	0	12
15:15	16	0	1	0	0	1	0	0	18	14	0	3	0	0	0	0	0	17
15:30	10	1	2	0	0	0	0	0	13	17	0	1	0	0	0	1	1	20
15:45	22	0	1	1	0	1	0	0	25	13	0	1	0	0	0	1	0	15
Hour	68	1	4	1	0	2	0	0	76	54	0	7	0	0	0	2	1	64
16:00	22	0	3	1	0	0	0	1	27	14	0	0	0	0	0	0	0	14
16:15	11	0	2	0	0	0	0	0	13	12	1	1	0	0	0	0	0	14
16:30	22	0	3	0	0	1	0	0	26	10	0	1	0	0	0	0	0	11
16:45	22	0	1	0	0	0	0	1	24	9	0	1	0	0	1	0	0	11
Hour	77	0	9	1	0	1	0	2	90	45	1	3	0	0	1	0	0	50
17:00	24	0	1	2	0	0	0	1	28	16	0	2	1	0	1	0	0	20
17:15	19	0	0	0	0	1	0	1	21	17	0	1	0	0	0	0	2	20
17:30	30	2	0	0	0	0	0	0	32	13	1	3	0	0	1	1	0	19
17:45	32	1	1	0	0	1	1	0	36	12	1	2	0	0	0	0	0	15
Hour	105	3	2	2	0	2	1	2	117	58	2	8	1	0	2	1	2	74
18:00	23	0	1	0	0	0	0	0	24	24	0	2	0	0	0	0	0	26
18:15	37	0	3	0	0	0	0	0	40	8	0	0	0	0	1	0	0	9
18:30	24	0	2	0	0	1	0	0	27	20	0	0	0	0	0	0	0	20
18:45	25	0	0	0	0	0	0	0	25	9	0	1	0	0	0	0	0	10
Hour	109	0	6	0	0	1	0	0	116	61	0	3	0	0	1	0	0	65
Total	711	21	63	16	0	19	5	10	845	676	16	72	14	2	18	7	11	816

Site No. 4
Location R117(N) / R113(W) / R117(S) / R113(E)
Date Tuesday 23 April 2024

Time	B to D - R113(W) to R113(E)								Veh. Total	B to C - R113(W) to R117(S)								Veh. Total
	CAR	TAXI	LGV	OGV1	OGV2	PSV	M/C	P/C		CAR	TAXI	LGV	OGV1	OGV2	PSV	M/C	P/C	
07:00	23	0	2	0	0	0	0	1	26	4	0	1	1	0	0	0	0	6
07:15	18	0	2	0	0	0	0	0	20	3	1	1	0	0	0	0	0	5
07:30	33	1	3	0	0	0	0	0	37	1	2	2	0	0	0	0	0	5
07:45	38	1	2	1	0	0	1	2	45	12	1	1	0	0	0	0	0	14
Hour	112	2	9	1	0	0	1	3	128	20	4	5	1	0	0	0	0	30
08:00	31	0	2	0	0	0	0	1	34	24	0	0	0	0	0	0	1	25
08:15	36	4	4	0	0	0	0	0	44	19	0	2	0	0	0	0	0	21
08:30	37	3	4	0	0	0	0	0	44	25	0	3	0	0	2	0	0	30
08:45	31	2	5	0	0	0	0	0	38	16	0	0	0	0	0	0	0	16
Hour	135	9	15	0	0	0	0	1	160	84	0	5	0	0	2	0	1	92
09:00	27	0	3	0	0	0	0	0	30	8	0	0	0	0	0	0	1	9
09:15	28	0	5	0	0	0	0	0	33	14	0	1	1	0	0	0	0	16
09:30	16	0	4	0	0	0	0	0	20	10	0	2	0	0	0	0	0	12
09:45	15	0	1	1	0	0	0	0	17	15	0	1	0	0	0	0	0	16
Hour	86	0	13	1	0	0	0	0	100	47	0	4	1	0	0	0	1	53
10:00	9	0	0	0	0	0	0	0	9	17	0	0	0	0	0	0	0	17
10:15	10	1	0	0	0	0	0	0	11	8	0	1	0	0	0	1	1	11
10:30	13	1	3	0	0	0	0	0	17	14	0	2	0	0	0	1	2	19
10:45	20	1	0	0	0	0	0	0	21	12	0	1	0	0	0	0	0	13
Hour	52	3	3	0	0	0	0	0	58	51	0	4	0	0	0	2	3	60
11:00	10	0	3	0	0	0	0	1	14	5	0	1	0	0	0	0	0	6
11:15	15	1	3	1	0	0	0	0	20	16	0	1	0	0	0	0	0	17
11:30	21	0	2	0	0	0	0	1	24	15	0	0	0	0	0	0	0	15
11:45	18	0	4	0	0	0	0	0	22	13	0	2	0	0	0	0	0	15
Hour	64	1	12	1	0	0	0	2	80	49	0	4	0	0	0	0	0	53
12:00	14	0	1	0	0	0	0	0	15	18	1	0	0	0	0	0	0	19
12:15	21	0	1	1	0	0	0	0	23	15	0	2	0	0	0	0	0	17
12:30	16	0	1	0	0	0	0	0	17	18	2	0	0	0	0	1	0	21
12:45	13	0	4	1	0	0	0	0	18	16	0	2	0	0	1	0	1	20
Hour	64	0	7	2	0	0	0	0	73	67	3	4	0	0	1	1	1	77
13:00	7	1	4	0	0	0	1	0	13	14	0	0	0	0	0	0	0	14
13:15	16	1	4	0	0	0	0	1	22	7	0	0	0	0	0	1	2	10
13:30	11	1	0	0	0	0	0	0	12	18	0	3	0	0	0	0	0	21
13:45	21	0	5	0	0	0	1	0	27	18	0	3	0	0	1	0	0	22
Hour	55	3	13	0	0	0	2	1	74	57	0	6	0	0	1	1	2	67
14:00	11	2	3	0	0	0	0	0	16	17	0	2	0	0	0	0	1	20
14:15	15	0	0	0	0	0	0	1	16	16	0	2	1	0	0	1	0	20
14:30	14	0	1	0	0	0	0	0	15	20	0	0	0	0	0	0	0	20
14:45	17	0	1	0	0	0	0	1	19	8	0	0	0	0	0	0	0	8
Hour	57	2	5	0	0	0	0	2	66	61	0	4	1	0	0	1	1	68
15:00	15	0	2	0	0	0	0	0	17	12	0	1	0	0	0	0	0	13
15:15	13	0	1	0	0	1	0	0	15	13	0	0	0	0	0	1	0	14
15:30	10	0	2	1	0	0	0	0	13	13	0	1	1	0	0	0	1	16
15:45	23	0	1	0	0	0	0	0	24	15	1	1	0	0	0	0	0	17
Hour	61	0	6	1	0	1	0	0	69	53	1	3	1	0	0	1	1	60
16:00	14	0	1	0	0	0	0	0	15	12	0	0	0	0	0	0	0	12
16:15	12	1	3	0	0	0	0	0	16	21	0	2	2	0	0	0	1	26
16:30	13	0	2	0	0	0	0	0	15	21	0	3	0	0	0	0	1	25
16:45	17	0	1	0	0	0	0	1	19	18	0	3	0	0	0	0	1	22
Hour	56	1	7	0	0	0	0	1	65	72	0	8	2	0	0	0	3	85
17:00	14	1	5	0	0	0	0	0	20	19	0	5	0	0	0	0	0	24
17:15	21	0	0	0	0	0	0	0	21	16	0	1	0	0	0	0	0	17
17:30	20	1	1	0	0	0	0	0	22	22	0	1	0	0	0	0	1	24
17:45	12	1	1	0	0	0	0	0	14	19	0	2	0	0	0	0	4	25
Hour	67	3	7	0	0	0	0	0	77	76	0	9	0	0	0	0	5	90
18:00	8	0	0	0	0	0	0	0	8	21	0	3	0	0	0	0	0	24
18:15	20	0	0	0	0	0	0	0	20	15	0	1	1	0	0	0	2	19
18:30	10	0	0	0	0	0	0	0	10	16	0	1	0	0	0	0	0	17
18:45	11	0	3	1	0	1	0	0	16	19	1	2	0	0	0	1	1	24
Hour	49	0	3	1	0	1	0	0	54	71	1	7	1	0	0	1	3	84
Total	858	24	100	7	0	2	3	10	1004	708	9	63	7	0	4	7	21	819

Site No. 4
Location R117(N) / R113(W) / R117(S) / R113(E)
Date Tuesday 23 April 2024

Time	C to B - R117(S) to R113(W)								Veh. Total	C to A - R117(S) to R117(N)								Veh. Total
	CAR	TAXI	LGV	OGV1	OGV2	PSV	M/C	P/C		CAR	TAXI	LGV	OGV1	OGV2	PSV	M/C	P/C	
07:00	3	0	2	0	0	0	0	1	6	62	0	4	1	0	0	0	0	67
07:15	2	1	1	0	0	0	0	1	5	80	0	7	0	0	1	1	5	94
07:30	10	0	0	2	0	0	0	0	12	100	1	9	1	1	0	0	5	117
07:45	11	1	1	0	0	0	0	0	13	72	2	5	1	1	1	0	7	89
Hour	26	2	4	2	0	0	0	2	36	314	3	25	3	2	2	1	17	367
08:00	15	0	1	0	0	0	0	0	16	84	3	5	0	0	1	1	18	112
08:15	21	0	0	0	0	0	0	0	21	81	2	6	1	0	1	3	8	102
08:30	20	0	1	0	0	1	0	0	22	90	1	3	2	2	0	1	15	114
08:45	9	0	0	0	0	1	0	0	10	86	2	4	1	0	0	0	9	102
Hour	65	0	2	0	0	2	0	0	69	341	8	18	4	2	2	5	50	430
09:00	12	0	3	0	0	0	0	0	15	54	2	5	1	1	0	1	5	69
09:15	9	2	0	0	0	0	0	0	11	54	0	4	2	0	0	2	5	67
09:30	7	0	0	0	0	1	0	0	8	49	1	1	2	0	0	0	6	59
09:45	6	0	0	0	0	0	0	0	6	46	2	1	5	0	0	0	4	58
Hour	34	2	3	0	0	1	0	0	40	203	5	11	10	1	0	3	20	253
10:00	9	0	3	2	0	0	0	0	14	42	0	2	1	1	0	0	1	47
10:15	11	0	0	0	0	0	0	1	12	33	3	3	0	0	1	0	0	40
10:30	10	0	1	0	0	0	0	0	11	33	3	2	0	0	2	0	1	41
10:45	8	0	1	0	0	0	0	0	9	36	2	4	4	1	0	0	2	49
Hour	38	0	5	2	0	0	0	1	46	144	8	11	5	2	3	0	4	177
11:00	10	0	1	0	0	0	0	1	12	26	0	4	0	0	1	0	1	32
11:15	9	0	3	1	0	0	0	0	13	41	3	5	0	0	1	2	1	53
11:30	9	0	0	0	0	0	0	0	9	32	1	7	0	1	0	0	1	42
11:45	7	0	1	0	0	0	0	2	10	27	1	0	1	1	0	0	2	32
Hour	35	0	5	1	0	0	0	3	44	126	5	16	1	2	2	2	5	159
12:00	12	1	3	0	0	0	0	1	17	35	2	2	1	2	0	2	2	46
12:15	20	0	2	1	0	0	0	0	23	40	3	4	2	2	0	0	4	55
12:30	12	1	3	1	0	0	0	0	17	32	3	7	0	1	0	3	1	47
12:45	11	0	0	0	0	0	0	0	11	47	1	2	2	0	0	1	7	60
Hour	55	2	8	2	0	0	0	1	68	154	9	15	5	5	0	6	14	208
13:00	14	0	1	1	0	0	0	1	17	31	3	1	1	1	0	1	4	42
13:15	10	0	1	1	0	0	0	0	12	38	2	6	2	0	0	0	0	48
13:30	18	0	4	0	0	0	0	0	22	47	0	6	1	0	0	0	5	59
13:45	16	0	2	0	0	0	0	1	19	40	1	2	0	1	0	2	4	50
Hour	58	0	8	2	0	0	0	2	70	156	6	15	4	2	0	3	13	199
14:00	13	0	0	0	0	0	0	0	13	36	1	4	1	0	0	0	3	45
14:15	19	0	0	0	0	0	0	0	19	70	0	3	1	0	0	1	0	75
14:30	20	0	0	0	0	1	0	1	22	67	0	4	1	0	0	1	3	76
14:45	20	1	1	0	0	0	0	1	23	40	2	3	1	0	1	1	2	50
Hour	72	1	1	0	0	1	0	2	77	213	3	14	4	0	1	3	8	246
15:00	11	1	0	0	0	0	0	0	12	45	1	2	0	0	0	2	2	52
15:15	23	0	1	1	0	0	0	0	25	54	0	5	1	1	0	0	0	61
15:30	20	0	2	0	0	1	0	1	24	37	2	1	0	0	0	0	2	42
15:45	12	0	1	0	0	0	0	0	13	52	1	2	0	0	0	2	1	58
Hour	66	1	4	1	0	1	0	1	74	188	4	10	1	1	0	4	5	213
16:00	22	2	0	0	0	0	0	0	24	37	3	4	2	0	0	0	3	49
16:15	12	0	0	0	0	0	0	0	12	36	0	2	0	1	0	0	1	40
16:30	17	0	2	0	0	0	0	0	19	41	1	3	1	0	0	0	1	47
16:45	8	0	1	0	0	0	0	2	11	41	2	3	0	0	0	1	1	48
Hour	59	2	3	0	0	0	0	2	66	155	6	12	3	1	0	1	6	184
17:00	19	0	2	0	0	0	0	0	21	23	3	2	1	1	0	1	3	34
17:15	14	0	4	0	0	0	0	0	18	42	3	1	1	1	0	0	5	53
17:30	11	0	3	0	0	0	0	0	14	39	1	1	0	0	0	1	3	45
17:45	28	1	1	0	0	0	0	0	30	55	1	3	1	0	0	0	2	62
Hour	72	1	10	0	0	0	0	0	83	159	8	7	3	2	0	2	13	194
18:00	19	0	1	0	0	0	0	0	20	33	2	0	0	1	0	1	3	40
18:15	10	1	0	0	0	1	0	0	12	49	2	4	0	0	0	1	3	59
18:30	20	1	2	0	0	0	0	0	23	44	1	2	2	0	0	1	3	53
18:45	14	1	1	0	0	0	0	0	16	54	0	3	0	0	1	1	0	59
Hour	63	3	4	0	0	1	0	0	71	180	5	9	2	1	1	4	9	211
Total	643	14	57	10	0	6	0	14	744	2333	70	163	45	21	11	34	164	2841

Site No. 4
Location R117(N) / R113(W) / R117(S) / R113(E)
Date Tuesday 23 April 2024

Time	C to D - R117(S) to R113(E)								Veh. Total	D to C - R113(E) to R117(S)								Veh. Total
	CAR	TAXI	LGV	OGV1	OGV2	PSV	M/C	P/C		CAR	TAXI	LGV	OGV1	OGV2	PSV	M/C	P/C	
07:00	25	1	1	3	0	0	1	0	31	8	0	3	0	0	0	0	0	11
07:15	25	2	6	0	0	0	0	0	33	6	1	2	0	1	0	0	0	10
07:30	67	2	6	0	0	0	0	0	75	4	0	7	1	0	0	0	0	12
07:45	73	1	8	0	0	0	0	0	82	19	0	2	0	0	0	0	0	21
Hour	190	6	21	3	0	0	1	0	221	37	1	14	1	1	0	0	0	54
08:00	68	2	4	0	0	0	1	1	76	26	0	8	0	2	0	0	0	36
08:15	58	1	4	0	0	0	0	0	63	44	0	4	0	0	0	0	0	48
08:30	55	1	5	0	0	0	0	0	61	38	0	1	0	1	0	0	0	40
08:45	30	2	2	0	0	0	0	0	34	27	1	0	0	0	0	0	1	29
Hour	211	6	15	0	0	0	1	1	234	135	1	13	0	3	0	0	1	153
09:00	35	0	0	0	0	0	0	0	35	28	0	4	0	0	0	0	0	32
09:15	26	0	6	0	0	0	0	0	32	18	0	4	1	0	0	0	0	23
09:30	43	0	0	2	0	0	0	6	51	14	0	6	0	0	0	0	0	20
09:45	23	0	1	0	0	0	0	1	25	24	0	6	1	0	0	0	0	31
Hour	127	0	7	2	0	0	0	7	143	84	0	20	2	0	0	0	0	106
10:00	31	2	4	1	0	0	0	0	38	19	0	3	0	0	0	0	3	25
10:15	21	1	1	0	0	0	0	0	23	16	1	4	0	0	0	0	0	21
10:30	46	1	7	1	0	0	0	1	56	20	1	8	1	0	0	0	0	30
10:45	13	0	2	1	0	0	0	0	16	15	0	5	1	0	0	0	0	21
Hour	111	4	14	3	0	0	0	1	133	70	2	20	2	0	0	0	3	97
11:00	18	0	4	1	0	0	1	0	24	17	0	5	0	0	0	1	0	23
11:15	12	1	4	0	0	0	0	0	17	18	0	4	1	1	0	0	1	25
11:30	13	0	6	0	0	0	0	0	19	21	0	1	0	0	0	0	0	22
11:45	19	0	4	0	0	0	1	0	24	30	0	4	0	0	0	0	1	35
Hour	62	1	18	1	0	0	2	0	84	86	0	14	1	1	0	1	2	105
12:00	22	0	3	0	0	0	0	0	25	23	1	5	0	0	0	0	0	29
12:15	43	0	4	1	0	0	0	1	49	24	0	6	1	0	0	0	0	31
12:30	29	0	3	0	0	0	0	0	32	19	1	1	1	0	0	0	0	22
12:45	14	2	3	0	0	0	0	0	19	26	0	3	0	0	0	0	2	31
Hour	108	2	13	1	0	0	0	1	125	92	2	15	2	0	0	0	2	113
13:00	15	0	5	0	0	0	0	1	21	29	0	6	0	0	0	1	0	36
13:15	24	1	1	0	0	0	0	0	26	20	0	2	0	0	0	0	1	23
13:30	15	1	2	0	0	0	0	0	18	29	0	3	1	0	0	0	0	33
13:45	19	0	2	0	0	0	0	0	21	44	0	4	0	0	0	0	0	48
Hour	73	2	10	0	0	0	0	1	86	122	0	15	1	0	0	1	1	140
14:00	17	2	3	0	0	0	0	1	23	31	2	8	0	0	0	0	0	41
14:15	27	2	5	0	0	0	0	0	34	36	0	5	0	0	0	0	0	41
14:30	32	1	3	0	0	0	1	0	37	25	0	2	0	0	0	0	0	27
14:45	24	0	2	0	0	0	0	0	26	31	0	3	0	0	0	0	0	34
Hour	100	5	13	0	0	0	1	1	120	123	2	18	0	0	0	0	0	143
15:00	20	1	3	0	0	0	0	0	24	23	0	6	1	1	0	0	2	33
15:15	27	1	4	0	0	0	0	0	32	18	0	4	0	0	0	0	0	22
15:30	17	2	6	1	0	0	0	0	26	26	0	3	0	0	0	1	0	30
15:45	10	1	4	0	0	0	0	0	15	35	2	3	0	0	0	0	0	40
Hour	74	5	17	1	0	0	0	0	97	102	2	16	1	1	0	1	2	125
16:00	19	0	8	0	0	0	0	0	27	19	2	3	0	0	0	0	1	25
16:15	15	0	3	0	0	0	0	0	18	33	0	5	0	0	0	0	0	38
16:30	18	0	5	0	0	0	0	0	23	40	1	6	0	0	0	0	2	49
16:45	29	0	0	0	0	0	1	0	30	43	0	3	1	0	0	1	1	49
Hour	81	0	16	0	0	0	1	0	98	135	3	17	1	0	0	1	4	161
17:00	23	0	4	0	1	0	0	0	28	53	0	6	1	0	0	0	0	60
17:15	23	0	4	0	0	0	0	2	29	63	0	1	0	0	0	3	0	67
17:30	26	1	2	0	0	0	0	0	29	61	3	2	0	0	0	0	1	67
17:45	19	0	3	0	0	0	0	0	22	61	1	6	0	0	0	2	0	70
Hour	91	1	13	0	1	0	0	2	108	238	4	15	1	0	0	5	1	264
18:00	12	2	1	1	0	0	1	1	18	55	1	0	0	0	0	0	1	57
18:15	18	1	0	0	0	0	0	0	19	45	0	3	0	0	0	0	0	48
18:30	23	0	2	0	0	0	0	0	25	52	1	3	0	0	0	1	0	57
18:45	21	0	2	0	0	0	0	0	23	54	1	3	0	0	0	3	1	62
Hour	74	3	5	1	0	0	1	1	85	206	3	9	0	0	0	4	2	224
Total	1302	35	162	12	1	0	7	15	1534	1430	20	186	12	6	0	13	18	1685

Site No. 4
Location R117(N) / R113(W) / R117(S) / R113(E)
Date Tuesday 23 April 2024

Time	D to B - R113(E) to R113(W)								Veh. Total	D to A - R113(E) to R117(N)								Veh. Total
	CAR	TAXI	LGV	OGV1	OGV2	PSV	M/C	P/C		CAR	TAXI	LGV	OGV1	OGV2	PSV	M/C	P/C	
07:00	3	1	4	0	0	0	0	0	8	0	0	0	0	0	0	0	0	0
07:15	8	1	3	0	0	0	0	0	12	0	0	0	0	0	0	0	0	0
07:30	7	1	0	0	0	0	0	0	8	0	0	1	0	0	0	0	0	1
07:45	13	0	0	0	0	0	0	1	14	2	0	0	0	0	0	0	1	3
Hour	31	3	7	0	0	0	0	1	42	2	0	1	0	0	0	0	1	4
08:00	18	0	1	0	0	0	0	0	19	2	1	0	0	0	0	0	1	4
08:15	17	0	2	0	0	0	0	0	19	1	0	0	0	0	0	0	0	1
08:30	11	0	2	0	0	0	0	0	13	1	0	2	0	0	0	0	0	3
08:45	15	1	2	0	0	0	0	1	19	0	0	1	0	0	0	0	0	1
Hour	61	1	7	0	0	0	0	1	70	4	1	3	0	0	0	0	1	9
09:00	15	0	1	0	0	0	0	0	16	2	0	0	0	0	0	0	0	2
09:15	19	1	5	0	0	0	0	0	25	0	0	2	0	0	0	0	0	2
09:30	11	1	4	0	0	0	0	0	16	1	0	0	0	0	0	0	0	1
09:45	21	0	3	0	0	0	0	0	24	0	0	1	0	0	0	0	0	1
Hour	66	2	13	0	0	0	0	0	81	3	0	3	0	0	0	0	0	6
10:00	13	0	2	0	0	0	0	0	15	0	0	0	0	0	0	0	0	0
10:15	17	0	2	0	0	0	0	0	19	1	1	0	0	0	0	1	0	3
10:30	12	1	1	0	0	0	0	0	14	4	0	0	0	0	0	0	0	4
10:45	8	0	1	0	0	0	0	0	9	2	0	0	0	0	0	0	0	2
Hour	50	1	6	0	0	0	0	0	57	7	1	0	0	0	0	1	0	9
11:00	4	1	2	1	0	0	0	0	8	1	0	0	0	0	0	0	0	1
11:15	9	2	3	0	0	0	0	0	14	2	0	0	0	0	0	0	0	2
11:30	15	1	2	0	0	0	0	1	19	3	0	0	0	0	0	0	0	3
11:45	13	0	3	0	0	0	0	1	17	1	0	0	0	0	0	0	0	1
Hour	41	4	10	1	0	0	0	2	58	7	0	0	0	0	0	0	0	7
12:00	13	1	3	0	0	0	0	0	17	3	0	1	0	0	0	0	0	4
12:15	11	1	3	0	0	0	0	0	15	1	0	0	0	0	0	0	0	1
12:30	13	0	2	0	0	0	0	0	15	2	0	0	0	0	0	0	0	2
12:45	9	1	0	0	0	0	0	0	10	3	0	1	0	0	0	0	0	4
Hour	46	3	8	0	0	0	0	0	57	9	0	2	0	0	0	0	0	11
13:00	15	0	4	0	0	0	0	0	19	1	1	0	0	0	0	0	0	2
13:15	13	2	3	0	0	0	0	0	18	2	0	0	0	0	0	0	0	2
13:30	17	0	2	0	0	0	0	0	19	2	0	0	0	0	0	0	0	2
13:45	18	0	0	0	0	0	1	0	19	1	0	1	0	0	0	0	0	2
Hour	63	2	9	0	0	0	1	0	75	6	1	1	0	0	0	0	0	8
14:00	13	0	1	0	0	0	0	0	14	3	0	1	0	0	0	0	0	4
14:15	6	0	2	0	0	0	0	0	8	2	0	0	0	0	0	0	0	2
14:30	14	0	4	0	0	0	1	0	19	2	0	0	0	1	0	0	1	4
14:45	12	0	2	1	0	0	0	0	15	2	0	0	0	0	0	0	0	2
Hour	45	0	9	1	0	0	1	0	56	9	0	1	0	1	0	0	1	12
15:00	12	0	3	0	0	0	0	0	15	0	0	1	0	0	0	0	0	1
15:15	17	0	6	0	0	0	0	0	23	3	0	0	0	0	0	0	0	3
15:30	13	0	2	1	0	0	1	0	17	1	0	0	0	0	0	0	0	1
15:45	20	0	2	0	0	0	0	1	23	0	0	0	0	0	0	0	0	0
Hour	62	0	13	1	0	0	1	1	78	4	0	1	0	0	0	0	0	5
16:00	20	1	4	0	0	0	0	0	25	0	0	0	0	0	0	0	0	0
16:15	22	0	4	0	0	0	0	1	27	2	0	0	0	0	0	0	0	2
16:30	25	0	4	0	0	0	1	1	31	1	0	0	0	0	0	0	0	1
16:45	26	0	5	0	0	0	0	0	31	1	0	1	0	0	0	0	1	3
Hour	93	1	17	0	0	0	1	2	114	4	0	1	0	0	0	0	1	6
17:00	33	0	2	0	0	0	0	0	35	0	0	0	0	0	0	0	0	0
17:15	28	1	1	0	0	0	0	0	30	0	0	0	0	0	0	0	1	1
17:30	36	0	1	0	1	0	1	0	39	0	0	0	0	0	0	0	0	0
17:45	28	2	3	0	0	0	1	0	34	0	0	0	0	0	0	0	0	0
Hour	125	3	7	0	1	0	2	0	138	0	0	0	0	0	0	0	1	1
18:00	23	0	3	0	0	0	0	2	28	0	0	0	0	0	0	0	0	0
18:15	30	0	1	0	0	0	0	4	35	0	0	1	0	0	0	0	0	1
18:30	21	1	2	0	0	0	0	1	25	0	1	0	0	0	0	0	0	1
18:45	26	0	2	0	0	0	0	1	29	1	0	0	0	0	0	0	0	1
Hour	100	1	8	0	0	0	0	8	117	1	1	1	0	0	0	0	0	3
Total	783	21	114	3	1	0	6	15	943	56	4	14	0	1	0	1	5	81

Site No. 4
Location R117(N) / R113(W) / R117(S) / R113(E)
Date Tuesday 23 April 2024

Time	To Arm A - R117(N)								Veh. Total	From Arm A - R117(N)								Veh. Total
	CAR	TAXI	LGV	OGV1	OGV2	PSV	M/C	P/C		CAR	TAXI	LGV	OGV1	OGV2	PSV	M/C	P/C	
07:00	71	1	7	1	0	1	0	1	82	19	1	5	2	0	0	0	1	28
07:15	98	0	7	0	0	1	1	6	113	14	1	4	1	0	4	0	3	27
07:30	126	1	12	1	1	1	0	5	147	28	1	1	1	0	0	0	4	35
07:45	106	2	5	1	1	2	0	8	125	35	4	0	0	0	2	0	1	42
Hour	401	4	31	3	2	5	1	20	467	96	7	10	4	0	6	0	9	132
08:00	118	4	9	0	0	1	1	19	152	66	1	3	2	0	2	1	2	77
08:15	112	2	6	1	0	1	4	8	134	65	0	5	2	0	1	0	4	77
08:30	127	1	6	2	2	2	1	15	156	76	1	8	0	0	0	0	2	87
08:45	112	2	8	2	0	0	0	9	133	67	2	3	1	0	0	0	1	74
Hour	469	9	29	5	2	4	6	51	575	274	4	19	5	0	3	1	9	315
09:00	70	2	6	1	1	0	1	5	86	58	1	2	0	0	1	0	2	64
09:15	67	1	8	2	0	0	2	5	85	49	1	1	4	0	1	0	2	58
09:30	64	1	3	3	0	1	0	7	79	40	2	5	3	0	0	0	0	50
09:45	58	3	4	6	0	1	0	4	76	37	3	4	2	3	0	0	1	50
Hour	259	7	21	12	1	2	3	21	326	184	7	12	9	3	2	0	5	222
10:00	49	1	2	1	1	0	0	1	55	25	3	1	2	0	0	1	3	35
10:15	36	5	4	1	0	1	2	0	49	32	3	2	0	1	2	0	1	41
10:30	46	3	3	0	0	4	0	1	57	39	3	2	1	0	0	0	2	47
10:45	44	2	7	5	1	0	0	3	62	38	1	7	1	0	0	0	3	50
Hour	175	11	16	7	2	5	2	5	223	134	10	12	4	1	2	1	9	173
11:00	32	0	5	1	0	1	0	1	40	43	0	7	1	0	0	1	2	54
11:15	59	3	7	0	0	1	2	1	73	39	1	7	2	0	1	0	3	53
11:30	49	2	8	0	1	1	0	2	63	39	4	5	0	0	0	0	3	51
11:45	40	2	2	2	1	0	0	2	49	50	1	4	2	0	1	1	1	60
Hour	180	7	22	3	2	3	2	6	225	171	6	23	5	0	2	2	9	218
12:00	43	4	5	1	2	0	2	2	59	52	3	3	2	0	0	1	1	62
12:15	53	3	6	3	3	0	0	4	72	37	3	6	2	0	1	0	0	49
12:30	48	3	9	0	2	1	3	1	67	51	0	4	1	0	0	2	2	60
12:45	56	2	4	4	0	0	1	7	74	39	1	6	3	1	1	0	4	55
Hour	200	12	24	8	7	1	6	14	272	179	7	19	8	1	2	3	7	226
13:00	49	4	2	2	1	0	1	4	63	46	3	3	5	0	0	0	2	59
13:15	46	4	11	3	0	1	1	0	66	66	1	2	2	1	2	0	3	77
13:30	62	0	6	1	0	1	0	5	75	57	2	9	2	1	0	1	7	79
13:45	52	1	4	1	1	0	2	5	66	43	6	7	0	1	1	0	1	59
Hour	209	9	23	7	2	2	4	14	270	212	12	21	9	3	3	1	13	274
14:00	50	1	8	1	0	0	0	4	64	77	2	5	2	0	0	2	1	89
14:15	85	0	5	1	0	0	1	1	93	52	4	5	2	0	2	0	0	65
14:30	73	1	4	1	1	1	2	4	87	71	2	5	1	0	1	0	0	80
14:45	55	2	4	1	0	1	1	2	66	67	2	2	1	1	0	0	5	78
Hour	263	4	21	4	1	2	4	11	310	267	10	17	6	1	3	2	6	312
15:00	55	1	5	0	0	0	2	2	65	80	1	6	0	1	0	1	4	93
15:15	71	0	8	1	1	0	0	0	81	64	1	4	0	0	1	0	3	73
15:30	55	2	2	0	0	0	1	3	63	57	4	8	0	0	0	1	1	71
15:45	65	1	3	0	0	0	3	1	73	70	1	5	3	1	1	0	2	83
Hour	246	4	18	1	1	0	6	6	282	271	7	23	3	2	2	2	10	320
16:00	51	3	4	2	0	0	0	3	63	108	0	3	1	0	0	1	9	122
16:15	50	1	3	0	1	0	0	1	56	90	1	5	0	0	1	0	6	103
16:30	52	1	4	1	0	0	0	1	59	104	0	8	0	0	1	0	0	113
16:45	51	2	5	0	0	1	1	2	62	114	2	8	0	0	0	2	4	130
Hour	204	7	16	3	1	1	1	7	240	416	3	24	1	0	2	3	19	468
17:00	39	3	4	2	1	1	1	3	54	85	0	19	2	0	0	1	8	115
17:15	59	3	2	1	1	0	0	8	74	102	1	8	1	0	1	1	5	119
17:30	52	2	4	0	0	1	2	3	64	114	5	9	0	0	0	1	13	142
17:45	67	2	5	1	0	0	0	2	77	135	2	4	0	1	1	4	11	158
Hour	217	10	15	4	2	2	3	16	269	436	8	40	3	1	2	7	37	534
18:00	57	2	2	0	1	0	1	3	66	94	0	3	2	0	0	3	9	111
18:15	57	2	5	0	0	1	1	3	69	136	0	6	0	1	0	2	12	157
18:30	64	2	2	2	0	0	1	3	74	93	3	5	0	1	1	2	9	114
18:45	64	0	4	0	0	1	1	0	70	105	2	5	0	0	1	1	8	122
Hour	242	6	13	2	1	2	4	9	279	428	5	19	2	2	2	8	38	504
Total	3065	90	249	59	24	29	42	180	3738	3068	86	239	59	14	31	30	171	3698

Site No. 4
Location R117(N) / R113(W) / R117(S) / R113(E)
Date Tuesday 23 April 2024

Time	To Arm B - R113(W)								Veh. Total	From Arm B - R113(W)								Veh. Total
	CAR	TAXI	LGV	OGV1	OGV2	PSV	M/C	P/C		CAR	TAXI	LGV	OGV1	OGV2	PSV	M/C	P/C	
07:00	12	1	8	0	0	0	0	1	22	36	1	6	1	0	1	0	2	47
07:15	14	2	5	0	0	1	0	1	23	39	1	3	0	0	0	0	1	44
07:30	21	1	0	3	0	0	0	0	25	60	3	7	0	0	1	0	0	71
07:45	35	1	1	0	0	1	0	1	39	82	2	3	1	0	1	1	2	92
Hour	82	5	14	3	0	2	0	3	109	217	7	19	2	0	3	1	5	254
08:00	51	1	3	1	0	0	1	0	57	87	0	6	0	0	0	0	2	95
08:15	55	0	3	0	0	1	0	0	59	85	4	6	0	0	0	1	0	96
08:30	48	0	5	0	0	1	0	0	54	98	3	8	0	0	4	0	0	113
08:45	40	2	3	0	0	1	0	1	47	73	2	8	1	0	0	0	0	84
Hour	194	3	14	1	0	3	1	1	217	343	9	28	1	0	4	1	2	388
09:00	46	0	5	0	0	1	0	0	52	49	0	4	0	0	0	0	1	54
09:15	45	3	6	0	0	1	0	0	55	55	1	8	1	0	0	0	0	65
09:30	31	2	6	0	0	1	0	0	40	40	0	8	1	0	1	0	1	51
09:45	34	1	4	0	0	0	0	1	40	42	1	4	2	0	1	0	0	50
Hour	156	6	21	0	0	3	0	1	187	186	2	24	4	0	2	0	2	220
10:00	22	1	5	3	0	0	1	0	32	33	1	0	0	0	0	0	0	34
10:15	36	0	2	0	0	2	0	1	41	20	2	2	1	0	0	2	1	28
10:30	28	2	3	0	0	0	0	0	33	36	1	6	0	0	2	1	2	48
10:45	28	0	5	0	0	0	0	2	35	38	1	4	1	0	0	0	1	45
Hour	114	3	15	3	0	2	1	3	141	127	5	12	2	0	2	3	4	155
11:00	29	1	6	1	0	0	0	2	39	20	0	5	1	0	0	0	1	27
11:15	26	2	9	2	0	1	0	0	40	47	1	6	1	0	0	0	0	55
11:30	32	3	4	0	0	0	0	1	40	50	1	3	0	0	1	0	2	57
11:45	27	0	5	1	0	0	0	3	36	43	1	8	1	0	0	0	0	53
Hour	114	6	24	4	0	1	0	6	155	160	3	22	3	0	1	0	3	192
12:00	39	2	9	1	0	0	0	1	52	37	3	3	0	0	0	0	0	43
12:15	41	1	6	2	0	1	0	0	51	48	0	5	2	1	0	0	0	56
12:30	35	1	5	2	0	0	1	0	44	48	2	3	0	1	1	1	0	56
12:45	30	2	1	1	0	1	0	0	35	35	1	7	3	0	1	0	1	48
Hour	145	6	21	6	0	2	1	1	182	168	6	18	5	2	2	1	1	203
13:00	40	2	6	2	0	0	0	1	51	38	1	5	1	0	0	1	0	46
13:15	34	3	5	1	0	1	0	0	44	29	3	9	1	0	1	2	3	48
13:30	51	0	9	1	0	0	0	1	62	42	1	3	0	0	1	0	0	47
13:45	46	1	2	0	0	0	1	1	51	50	0	9	1	0	1	1	1	63
Hour	171	6	22	4	0	1	1	3	208	159	5	26	3	0	3	4	4	204
14:00	40	1	3	1	0	0	1	0	46	39	2	8	0	0	0	0	2	51
14:15	32	2	3	0	0	1	0	0	38	44	0	4	1	0	0	1	2	52
14:30	50	0	7	0	0	2	1	1	61	38	1	1	0	0	1	1	0	42
14:45	40	2	3	1	0	0	0	2	48	38	0	2	0	0	0	0	1	41
Hour	162	5	16	2	0	3	2	3	193	159	3	15	1	0	1	2	5	186
15:00	43	1	3	0	0	0	0	0	47	37	0	5	0	0	0	0	0	42
15:15	56	0	8	1	0	1	0	0	66	40	0	4	0	0	1	1	0	46
15:30	43	1	6	1	0	1	1	1	54	40	0	4	2	0	0	1	2	49
15:45	54	0	4	1	0	1	0	1	61	51	1	3	0	0	0	1	0	56
Hour	196	2	21	3	0	3	1	2	228	168	1	16	2	0	1	3	2	193
16:00	64	3	7	1	0	0	0	1	76	40	0	1	0	0	0	0	0	41
16:15	45	0	6	0	0	0	0	1	52	45	2	6	2	0	0	0	1	56
16:30	64	0	9	0	0	1	1	1	76	44	0	6	0	0	0	0	1	51
16:45	56	0	7	0	0	0	0	3	66	44	0	5	0	0	1	0	2	52
Hour	229	3	29	1	0	1	1	6	270	173	2	18	2	0	1	0	4	200
17:00	76	0	5	2	0	0	0	1	84	49	1	12	1	0	1	0	0	64
17:15	61	1	5	0	0	1	0	1	69	54	0	2	0	0	0	0	2	58
17:30	77	2	4	0	1	0	1	0	85	55	2	5	0	0	1	1	1	65
17:45	88	4	5	0	0	1	2	0	100	43	2	5	0	0	0	0	4	54
Hour	302	7	19	2	1	2	3	2	338	201	5	24	1	0	2	1	7	241
18:00	65	0	5	0	0	0	0	2	72	53	0	5	0	0	0	0	0	58
18:15	77	1	4	0	0	1	0	4	87	43	0	1	1	0	1	0	2	48
18:30	65	2	6	0	0	1	0	1	75	46	0	1	0	0	0	0	0	47
18:45	65	1	3	0	0	0	0	1	70	39	1	6	1	0	1	1	1	50
Hour	272	4	18	0	0	2	0	8	304	181	1	13	2	0	2	1	3	203
Total	2137	56	234	29	1	25	11	39	2532	2242	49	235	28	2	24	17	42	2639

Site No. 4
Location R117(N) / R113(W) / R117(S) / R113(E)
Date Tuesday 23 April 2024

Time	To Arm C - R117(S)								Veh. Total	From Arm C - R117(S)								Veh. Total
	CAR	TAXI	LGV	OGV1	OGV2	PSV	M/C	P/C		CAR	TAXI	LGV	OGV1	OGV2	PSV	M/C	P/C	
07:00	25	1	7	3	0	0	0	1	37	90	1	7	4	0	0	1	1	104
07:15	19	3	6	1	1	3	0	3	36	107	3	14	0	0	1	1	6	132
07:30	28	2	10	1	0	0	0	4	45	177	3	15	3	1	0	0	5	204
07:45	55	4	3	0	0	1	0	1	64	156	4	14	1	1	1	0	7	184
Hour	127	10	26	5	1	4	0	9	182	530	11	50	8	2	2	2	19	624
08:00	98	0	10	1	2	2	0	2	115	167	5	10	0	0	1	2	19	204
08:15	109	0	10	2	0	0	0	4	125	160	3	10	1	0	1	3	8	186
08:30	122	1	10	0	1	2	0	2	138	165	2	9	2	2	1	1	15	197
08:45	93	2	2	1	0	0	0	2	100	125	4	6	1	0	1	0	9	146
Hour	422	3	32	4	3	4	0	10	478	617	14	35	4	2	4	6	51	733
09:00	74	1	5	0	0	0	0	3	83	101	2	8	1	1	0	1	5	119
09:15	61	1	5	6	0	0	0	2	75	89	2	10	2	0	0	2	5	110
09:30	51	0	11	3	0	0	0	0	65	99	1	1	4	0	1	0	12	118
09:45	69	2	10	2	3	0	0	0	86	75	2	2	5	0	0	0	5	89
Hour	255	4	31	11	3	0	0	5	309	364	7	21	12	1	1	3	27	436
10:00	60	2	4	1	0	0	0	6	73	82	2	9	4	1	0	0	1	99
10:15	46	4	7	0	1	0	1	2	61	65	4	4	0	0	1	0	1	75
10:30	65	3	11	2	0	0	1	4	86	89	4	10	1	0	2	0	2	108
10:45	52	1	10	2	0	0	0	1	66	57	2	7	5	1	0	0	2	74
Hour	223	10	32	5	1	0	2	13	286	293	12	30	10	2	3	0	6	356
11:00	49	0	10	1	0	0	2	0	62	54	0	9	1	0	1	1	2	68
11:15	61	1	9	2	1	0	0	4	78	62	4	12	1	0	1	2	1	83
11:30	67	2	4	0	0	0	0	3	76	54	1	13	0	1	0	0	1	70
11:45	84	1	8	1	0	1	1	2	98	53	1	5	1	1	0	1	4	66
Hour	261	4	31	4	1	1	3	9	314	223	6	39	3	2	2	4	8	287
12:00	77	4	5	1	0	0	1	1	89	69	3	8	1	2	0	2	3	88
12:15	66	3	13	2	0	0	0	0	84	103	3	10	4	2	0	0	5	127
12:30	74	3	5	1	0	0	2	2	87	73	4	13	1	1	0	3	1	96
12:45	70	0	10	2	1	1	0	6	90	72	3	5	2	0	0	1	7	90
Hour	287	10	33	6	1	1	3	9	350	317	13	36	8	5	0	6	16	401
13:00	75	1	8	4	0	0	1	2	91	60	3	7	2	1	0	1	6	80
13:15	82	0	3	2	1	1	1	6	96	72	3	8	3	0	0	0	0	86
13:30	85	2	11	2	1	0	1	6	108	80	1	12	1	0	0	0	5	99
13:45	93	4	11	0	0	2	0	1	111	75	1	6	0	1	0	2	5	90
Hour	335	7	33	8	2	3	3	15	406	287	8	33	6	2	0	3	16	355
14:00	106	3	13	1	0	0	1	2	126	66	3	7	1	0	0	0	4	81
14:15	95	2	10	3	0	1	1	0	112	116	2	8	1	0	0	1	0	128
14:30	98	2	3	1	0	0	0	0	104	119	1	7	1	0	1	2	4	135
14:45	97	1	5	1	1	0	0	4	109	84	3	6	1	0	1	1	3	99
Hour	396	8	31	6	1	1	2	6	451	385	9	28	4	0	2	4	11	443
15:00	93	1	12	1	2	0	1	5	115	76	3	5	0	0	0	2	2	88
15:15	79	1	7	0	0	0	1	2	90	104	1	10	2	1	0	0	0	118
15:30	80	3	10	1	0	0	2	2	98	74	4	9	1	0	1	0	3	92
15:45	97	4	8	2	1	0	0	2	114	74	2	7	0	0	0	2	1	86
Hour	349	9	37	4	3	0	4	11	417	328	10	31	3	1	1	4	6	384
16:00	116	2	3	0	0	0	1	9	131	78	5	12	2	0	0	0	3	100
16:15	133	1	10	2	0	1	0	7	154	63	0	5	0	1	0	0	1	70
16:30	142	1	14	0	0	0	0	3	160	76	1	10	1	0	0	0	1	89
16:45	152	2	13	1	0	0	2	4	174	78	2	4	0	0	0	2	3	89
Hour	543	6	40	3	0	1	3	23	619	295	8	31	3	1	0	2	8	348
17:00	132	0	29	1	0	0	1	7	170	65	3	8	1	2	0	1	3	83
17:15	157	1	10	1	0	0	4	4	177	79	3	9	1	1	0	0	7	100
17:30	165	6	12	0	0	0	1	15	199	76	2	6	0	0	0	1	3	88
17:45	182	2	11	0	1	0	5	15	216	102	2	7	1	0	0	0	2	114
Hour	636	9	62	2	1	0	11	41	762	322	10	30	3	3	0	2	15	385
18:00	145	1	5	2	0	0	3	10	166	64	4	2	1	1	0	2	4	78
18:15	156	0	7	1	1	0	2	14	181	77	4	4	0	0	1	1	3	90
18:30	135	4	6	0	1	0	3	9	158	87	2	6	2	0	0	1	3	101
18:45	150	4	9	0	0	1	5	10	179	89	1	6	0	0	1	1	0	98
Hour	586	9	27	3	2	1	13	43	684	317	11	18	3	1	2	5	10	367
Total	4420	89	415	61	19	16	44	194	5258	4278	119	382	67	22	17	41	193	5119

Site No. 4
Location R117(N) / R113(W) / R117(S) / R113(E)
Date Tuesday 23 April 2024

Time	To Arm D - R113(E)								Veh. Total	From Arm D - R113(E)								Veh. Total
	CAR	TAXI	LGV	OGV1	OGV2	PSV	M/C	P/C		CAR	TAXI	LGV	OGV1	OGV2	PSV	M/C	P/C	
07:00	48	1	3	3	0	0	1	1	57	11	1	7	0	0	0	0	0	19
07:15	43	2	8	0	0	0	0	0	53	14	2	5	0	1	0	0	0	22
07:30	101	4	9	0	0	0	0	0	114	11	1	8	1	0	0	0	0	21
07:45	111	3	10	1	0	0	1	2	128	34	0	2	0	0	0	0	2	38
Hour	303	10	30	4	0	0	2	3	352	70	4	22	1	1	0	0	2	100
08:00	99	2	6	0	0	0	1	3	111	46	1	9	0	2	0	0	1	59
08:15	96	5	8	0	0	0	0	0	109	62	0	6	0	0	0	0	0	68
08:30	92	4	9	0	0	0	0	0	105	50	0	5	0	1	0	0	0	56
08:45	62	4	7	0	0	0	0	0	73	42	2	3	0	0	0	0	2	49
Hour	349	15	30	0	0	0	1	3	398	200	3	23	0	3	0	0	3	232
09:00	63	0	3	0	0	0	0	0	66	45	0	5	0	0	0	0	0	50
09:15	57	0	11	0	0	0	0	0	68	37	1	11	1	0	0	0	0	50
09:30	59	1	4	2	0	0	0	6	72	26	1	10	0	0	0	0	0	37
09:45	38	0	2	2	0	0	0	1	43	45	0	10	1	0	0	0	0	56
Hour	217	1	20	4	0	0	0	7	249	153	2	36	2	0	0	0	0	193
10:00	41	2	4	1	0	0	0	0	48	32	0	5	0	0	0	0	3	40
10:15	33	2	1	0	0	0	0	0	36	34	2	6	0	0	0	1	0	43
10:30	61	2	10	1	0	0	0	1	75	36	2	9	1	0	0	0	0	48
10:45	34	1	2	1	0	0	0	0	38	25	0	6	1	0	0	0	0	32
Hour	169	7	17	3	0	0	0	1	197	127	4	26	2	0	0	1	3	163
11:00	29	0	7	1	0	0	1	2	40	22	1	7	1	0	0	1	0	32
11:15	31	2	7	1	0	0	0	0	41	29	2	7	1	1	0	0	1	41
11:30	34	0	8	0	0	0	0	1	43	39	1	3	0	0	0	0	1	44
11:45	39	0	9	0	0	0	1	0	49	44	0	7	0	0	0	0	2	53
Hour	133	2	31	2	0	0	2	3	173	134	4	24	2	1	0	1	4	170
12:00	38	1	4	0	0	0	0	0	43	39	2	9	0	0	0	0	0	50
12:15	64	0	5	2	0	0	0	1	72	36	1	9	1	0	0	0	0	47
12:30	49	0	4	0	0	0	0	0	53	34	1	3	1	0	0	0	0	39
12:45	28	2	7	1	0	0	0	1	39	38	1	4	0	0	0	0	2	45
Hour	179	3	20	3	0	0	0	2	207	147	5	25	2	0	0	0	2	181
13:00	25	1	9	0	0	0	1	1	37	45	1	10	0	0	0	1	0	57
13:15	40	2	5	0	0	0	0	1	48	35	2	5	0	0	0	0	1	43
13:30	29	2	3	0	0	0	0	0	34	48	0	5	1	0	0	0	0	54
13:45	40	1	10	0	1	0	1	0	53	63	0	5	0	0	0	1	0	69
Hour	134	6	27	0	1	0	2	2	172	191	3	25	1	0	0	2	1	223
14:00	33	4	6	0	0	0	0	1	44	47	2	10	0	0	0	0	0	59
14:15	44	2	6	0	0	0	0	1	53	44	0	7	0	0	0	0	0	51
14:30	48	1	5	0	0	0	1	0	55	41	0	6	0	1	0	1	1	50
14:45	42	0	3	0	0	0	0	1	46	45	0	5	1	0	0	0	0	51
Hour	167	7	20	0	0	0	1	3	198	177	2	28	1	1	0	1	1	211
15:00	37	1	6	0	0	0	0	1	45	35	0	10	1	1	0	0	2	49
15:15	40	1	5	0	0	1	0	1	48	38	0	10	0	0	0	0	0	48
15:30	33	2	8	2	0	0	0	0	45	40	0	5	1	0	0	2	0	48
15:45	34	1	5	0	0	0	0	0	40	55	2	5	0	0	0	0	1	63
Hour	144	5	24	2	0	1	0	2	178	168	2	30	2	1	0	2	3	208
16:00	34	0	9	0	0	0	0	0	43	39	3	7	0	0	0	0	1	50
16:15	27	1	6	0	0	0	0	0	34	57	0	9	0	0	0	0	1	67
16:30	32	0	7	0	0	0	0	0	39	66	1	10	0	0	0	1	3	81
16:45	47	0	1	0	0	0	2	2	52	70	0	9	1	0	0	1	2	83
Hour	140	1	23	0	0	0	2	2	168	232	4	35	1	0	0	2	7	281
17:00	38	1	9	0	1	0	0	0	49	86	0	8	1	0	0	0	0	95
17:15	49	0	4	0	0	0	0	2	55	91	1	2	0	0	0	3	1	98
17:30	48	2	3	0	0	0	0	0	53	97	3	3	0	1	0	1	1	106
17:45	32	1	4	0	0	0	0	0	37	89	3	9	0	0	0	3	0	104
Hour	167	4	20	0	1	0	0	2	194	363	7	22	1	1	0	7	2	403
18:00	22	2	1	1	0	0	1	1	28	78	1	3	0	0	0	0	3	85
18:15	41	1	0	0	0	0	0	0	42	75	0	5	0	0	0	0	4	84
18:30	35	0	3	0	0	0	0	0	38	73	3	5	0	0	0	1	1	83
18:45	35	0	6	1	0	1	0	0	43	81	1	5	0	0	0	3	2	92
Hour	133	3	10	2	0	1	1	1	151	307	5	18	0	0	0	4	10	344
Total	2235	64	272	20	2	2	11	31	2637	2269	45	314	15	8	0	20	38	2709

Site No. 5
Location Kilgobbin Rd(N) / R113(W) / Kilgobbin Rd(S) / R113(E)
Date Tuesday 23 April 2024

Time	A to D - Kilgobbin Rd(N) to R113(E)								Veh. Total	A to C - Kilgobbin Rd(N) to Kilgobbin Rd(S)								Veh. Total
	CAR	TAXI	LGV	OGV1	OGV2	PSV	M/C	P/C		CAR	TAXI	LGV	OGV1	OGV2	PSV	M/C	P/C	
07:00	15	1	4	1	0	0	0	0	21	8	1	4	0	1	0	0	0	14
07:15	22	0	2	0	0	0	0	0	24	4	1	2	0	0	0	0	0	7
07:30	26	0	4	0	0	0	1	0	31	11	0	4	4	0	0	1	0	20
07:45	36	0	3	1	0	0	1	0	41	21	1	3	0	0	0	0	0	25
Hour	99	1	13	2	0	0	2	0	117	44	3	13	4	1	0	1	0	66
08:00	22	1	5	1	0	0	1	0	30	22	0	3	0	0	0	0	0	25
08:15	30	0	4	1	0	0	1	0	36	38	1	4	0	0	0	1	0	44
08:30	38	0	2	0	0	0	0	0	40	34	0	3	0	0	0	0	2	39
08:45	42	0	4	1	0	0	0	3	50	29	2	1	0	0	0	0	0	32
Hour	132	1	15	3	0	0	2	3	156	123	3	11	0	0	0	1	2	140
09:00	27	2	6	1	0	0	0	1	37	28	0	4	2	0	0	0	1	35
09:15	30	0	1	1	0	0	0	0	32	32	0	6	0	0	0	1	0	39
09:30	22	1	3	3	0	0	0	0	29	22	1	6	0	0	0	0	1	30
09:45	15	0	2	1	0	0	0	0	18	32	0	3	1	0	0	0	0	36
Hour	94	3	12	6	0	0	0	1	116	114	1	19	3	0	0	1	2	140
10:00	11	1	5	2	0	0	0	0	19	20	1	4	0	0	0	0	1	26
10:15	11	1	5	3	0	0	0	0	20	21	0	7	0	0	0	0	0	28
10:30	13	0	0	0	0	0	0	2	15	26	0	4	1	0	0	0	0	31
10:45	13	1	1	1	0	1	1	0	18	18	0	4	1	0	0	2	0	25
Hour	48	3	11	6	0	1	1	2	72	85	1	19	2	0	0	2	1	110
11:00	6	1	1	0	0	0	2	0	10	23	0	4	2	0	0	0	0	29
11:15	9	0	4	0	0	0	0	0	13	29	1	4	1	0	0	0	0	35
11:30	17	1	2	0	0	0	0	0	20	21	0	4	0	0	0	0	0	25
11:45	12	1	2	1	0	0	0	0	16	29	0	4	0	0	0	0	0	33
Hour	44	3	9	1	0	0	2	0	59	102	1	16	3	0	0	0	0	122
12:00	9	1	3	1	0	0	1	0	15	27	0	2	2	0	0	0	0	31
12:15	11	1	3	0	0	0	0	0	15	30	0	3	2	0	0	1	1	37
12:30	23	0	6	0	0	0	0	0	29	30	0	2	1	0	0	0	3	36
12:45	29	0	5	0	0	0	0	0	34	30	1	6	1	0	1	0	1	40
Hour	72	2	17	1	0	0	1	0	93	117	1	13	6	0	1	1	5	144
13:00	13	0	2	0	1	0	0	0	16	48	2	6	1	0	0	2	1	60
13:15	17	0	1	0	0	0	0	0	18	32	1	2	0	0	0	2	0	37
13:30	21	0	1	0	0	0	0	0	22	37	0	3	0	0	0	1	2	43
13:45	23	0	2	0	0	0	0	0	25	41	0	7	1	0	0	2	0	51
Hour	74	0	6	0	1	0	0	0	81	158	3	18	2	0	0	7	3	191
14:00	19	0	3	1	0	0	0	0	23	32	0	2	0	0	0	0	1	35
14:15	19	0	1	0	0	0	0	0	20	30	0	3	0	0	0	0	1	34
14:30	11	1	3	0	0	0	0	0	15	53	0	5	3	0	0	0	1	62
14:45	19	0	1	0	0	0	0	0	20	34	0	2	1	0	0	1	1	39
Hour	68	1	8	1	0	0	0	0	78	149	0	12	4	0	0	1	4	170
15:00	12	0	6	0	0	0	0	0	18	37	0	3	1	0	0	0	2	43
15:15	19	1	1	2	0	0	1	0	24	41	2	5	1	0	1	1	3	54
15:30	16	0	3	1	0	0	1	0	21	51	1	4	0	0	0	2	3	61
15:45	25	0	7	1	0	0	0	0	33	40	0	5	0	0	0	2	4	51
Hour	72	1	17	4	0	0	2	0	96	169	3	17	2	0	1	5	12	209
16:00	27	0	6	1	0	0	1	0	35	55	1	3	0	0	0	1	2	62
16:15	18	0	6	0	0	0	0	0	24	58	2	7	1	0	0	1	3	72
16:30	12	2	0	1	0	0	0	0	15	50	1	7	1	0	0	0	1	60
16:45	14	1	1	0	0	0	0	1	17	62	1	14	0	0	0	0	2	79
Hour	71	3	13	2	0	0	1	1	91	225	5	31	2	0	0	2	8	273
17:00	16	0	3	0	0	0	0	0	19	60	1	3	0	0	0	1	2	67
17:15	27	0	3	2	0	0	0	1	33	62	0	7	0	0	0	0	4	73
17:30	25	0	1	0	0	0	1	1	28	68	1	4	0	0	0	1	3	77
17:45	29	0	1	1	0	0	0	1	32	69	0	2	1	0	0	1	4	77
Hour	97	0	8	3	0	0	1	3	112	259	2	16	1	0	0	3	13	294
18:00	24	0	1	0	0	0	0	0	25	48	0	1	0	0	0	0	7	56
18:15	19	0	1	0	0	0	0	1	21	57	0	1	0	0	0	1	6	65
18:30	18	0	1	0	0	0	1	0	20	48	0	3	0	0	0	2	5	58
18:45	18	1	2	0	0	0	0	0	21	35	2	3	1	0	0	2	5	48
Hour	79	1	5	0	0	0	1	1	87	188	2	8	1	0	0	5	23	227
Total	950	19	134	29	1	1	13	11	1158	1733	25	193	30	1	2	29	73	2086

Site No. 5
Location Kilgobbin Rd(N) / R113(W) / Kilgobbin Rd(S) / R113(E)
Date Tuesday 23 April 2024

Time	A to B - Kilgobbin Rd(N) to R113(W)								Veh. Total	B to A - R113(W) to Kilgobbin Rd(N)								Veh. Total
	CAR	TAXI	LGV	OGV1	OGV2	PSV	M/C	P/C		CAR	TAXI	LGV	OGV1	OGV2	PSV	M/C	P/C	
07:00	8	1	2	0	0	0	0	0	11	41	0	13	1	0	0	0	0	55
07:15	6	0	5	2	0	0	0	0	13	33	0	10	0	0	0	2	0	45
07:30	10	0	5	0	0	0	0	0	15	72	2	12	0	0	0	0	1	87
07:45	17	0	3	0	0	0	0	0	20	79	0	9	0	0	0	0	1	89
Hour	41	1	15	2	0	0	0	0	59	225	2	44	1	0	0	2	2	276
08:00	17	0	5	1	2	0	0	0	25	65	2	7	0	0	0	1	1	76
08:15	30	1	1	0	0	0	0	0	32	78	2	5	1	0	1	0	0	87
08:30	21	1	1	1	1	0	0	0	25	82	2	9	0	1	0	1	0	95
08:45	26	0	4	0	0	0	0	0	30	53	2	7	0	0	0	0	0	62
Hour	94	2	11	2	3	0	0	0	112	278	8	28	1	1	1	2	1	320
09:00	16	0	0	0	0	0	0	0	16	48	1	6	0	0	0	0	0	55
09:15	16	1	6	2	0	0	0	0	25	46	1	8	2	0	0	0	0	57
09:30	13	1	5	1	0	0	0	0	20	31	2	5	1	0	0	0	0	39
09:45	22	1	3	0	0	0	0	0	26	24	0	2	0	0	0	0	0	26
Hour	67	3	14	3	0	0	0	0	87	149	4	21	3	0	0	0	0	177
10:00	16	1	2	0	0	0	0	0	19	18	1	5	1	0	0	0	0	25
10:15	12	1	3	1	0	0	0	0	17	27	1	2	1	0	0	0	0	31
10:30	17	0	3	1	0	0	0	1	22	14	0	6	0	0	0	1	0	21
10:45	11	0	3	0	0	0	0	0	14	24	1	3	0	0	0	0	0	28
Hour	56	2	11	2	0	0	0	1	72	83	3	16	2	0	0	1	0	105
11:00	7	0	2	1	0	0	0	0	10	21	0	7	2	0	0	0	0	30
11:15	15	4	4	1	0	0	0	0	24	20	0	5	3	0	0	0	0	28
11:30	18	1	1	0	0	0	0	0	20	23	0	8	1	0	0	0	1	33
11:45	12	1	4	0	0	0	0	1	18	20	1	5	1	1	0	1	0	29
Hour	52	6	11	2	0	0	0	1	72	84	1	25	7	1	0	1	1	120
12:00	22	0	4	0	0	0	0	0	26	26	3	6	1	1	0	0	0	37
12:15	19	1	5	2	0	0	0	0	27	30	0	2	1	0	0	0	0	33
12:30	14	2	4	1	0	0	1	0	22	29	0	8	2	0	0	1	0	40
12:45	20	0	1	0	0	0	0	0	21	18	2	7	1	0	0	0	0	28
Hour	75	3	14	3	0	0	1	0	96	103	5	23	5	1	0	1	0	138
13:00	18	0	2	0	0	0	0	1	21	23	3	7	0	0	0	1	0	34
13:15	12	0	5	0	0	0	0	1	18	26	4	2	1	0	0	1	0	34
13:30	20	0	3	0	0	0	0	0	23	21	2	3	2	0	0	0	0	28
13:45	29	1	1	0	0	0	0	0	31	19	0	6	0	0	0	0	0	25
Hour	79	1	11	0	0	0	0	2	93	89	9	18	3	0	0	2	0	121
14:00	22	1	2	0	0	0	1	0	26	27	1	9	0	0	0	0	1	38
14:15	20	1	1	0	0	0	0	0	22	29	1	4	2	0	0	0	0	36
14:30	26	1	4	2	0	0	1	0	34	30	1	5	0	0	0	1	0	37
14:45	16	0	1	0	0	0	0	1	18	35	3	5	0	0	0	1	0	44
Hour	84	3	8	2	0	0	2	1	100	121	6	23	2	0	0	2	1	155
15:00	17	1	7	1	0	0	0	0	26	31	0	6	0	0	0	0	0	37
15:15	13	1	2	0	0	0	0	0	16	30	0	8	1	0	1	0	0	40
15:30	17	0	4	0	0	0	0	0	21	29	2	6	1	0	0	1	0	39
15:45	34	2	4	0	0	0	1	1	42	22	1	8	0	0	0	0	0	31
Hour	81	4	17	1	0	0	1	1	105	112	3	28	2	0	1	1	0	147
16:00	25	2	1	1	0	0	1	0	30	30	0	9	1	0	0	0	0	40
16:15	20	1	3	0	0	0	1	0	25	22	1	8	0	1	0	1	0	33
16:30	32	1	5	0	0	0	0	0	38	27	0	3	0	0	0	0	0	30
16:45	28	0	5	0	0	0	0	0	33	27	0	3	0	0	0	0	1	31
Hour	105	4	14	1	0	0	2	0	126	106	1	23	1	1	0	1	1	134
17:00	36	0	3	0	0	0	0	0	39	23	0	9	0	1	0	0	0	33
17:15	33	0	3	0	0	0	2	0	38	28	1	6	0	0	0	0	0	35
17:30	61	2	1	0	0	0	1	0	65	25	0	5	0	0	0	0	0	30
17:45	31	0	2	0	0	0	2	0	35	21	1	2	1	0	0	0	0	25
Hour	161	2	9	0	0	0	5	0	177	97	2	22	1	1	0	0	0	123
18:00	33	1	2	0	0	0	0	0	36	31	0	1	1	0	0	1	0	34
18:15	37	0	2	0	0	0	0	0	39	26	0	0	0	0	0	0	0	26
18:30	41	0	2	0	0	0	0	0	43	32	0	3	0	0	0	0	0	35
18:45	23	0	3	0	0	0	1	1	28	20	0	5	0	0	0	0	0	25
Hour	134	1	9	0	0	0	1	1	146	109	0	9	1	0	0	1	0	120
Total	1029	32	144	18	3	0	12	7	1245	1556	44	280	29	5	2	14	6	1936

Site No. 5
Location Kilgobbin Rd(N) / R113(W) / Kilgobbin Rd(S) / R113(E)
Date Tuesday 23 April 2024

Time	B to D - R113(W) to R113(E)								Veh. Total	B to C - R113(W) to Kilgobbin Rd(S)								Veh. Total
	CAR	TAXI	LGV	OGV1	OGV2	PSV	M/C	P/C		CAR	TAXI	LGV	OGV1	OGV2	PSV	M/C	P/C	
07:00	16	1	1	0	0	0	1	1	20	4	1	0	1	0	0	0	0	6
07:15	25	3	4	0	0	0	0	0	32	5	1	2	0	0	1	0	0	9
07:30	27	1	1	0	0	0	0	2	31	8	0	0	0	0	0	0	0	8
07:45	55	2	3	0	0	0	1	2	63	24	0	0	0	0	0	0	1	25
Hour	123	7	9	0	0	0	2	5	146	41	2	2	1	0	1	0	1	48
08:00	40	1	0	1	0	0	0	0	42	22	0	0	0	0	1	0	2	25
08:15	42	2	1	1	0	0	1	0	47	28	0	2	0	0	0	0	2	32
08:30	51	1	3	0	0	0	0	0	55	25	1	2	0	0	0	0	0	28
08:45	54	1	1	0	0	0	0	1	57	32	1	2	3	0	0	0	2	40
Hour	187	5	5	2	0	0	1	1	201	107	2	6	3	0	1	0	6	125
09:00	41	1	1	0	0	0	0	0	43	30	1	0	0	0	1	0	1	33
09:15	25	0	3	0	0	0	0	2	30	12	0	6	0	0	0	0	0	18
09:30	25	0	2	0	0	0	1	0	28	18	0	1	1	0	0	0	0	20
09:45	25	2	1	1	0	0	0	2	31	5	0	2	0	0	0	0	0	7
Hour	116	3	7	1	0	0	1	4	132	65	1	9	1	0	1	0	1	78
10:00	22	1	2	0	0	0	0	2	27	15	0	2	3	0	1	0	1	22
10:15	20	2	2	2	0	0	0	0	26	13	0	1	0	0	0	1	0	15
10:30	27	0	4	0	0	0	0	0	31	20	0	3	1	0	0	1	0	25
10:45	22	0	4	1	0	0	0	1	28	22	2	3	1	0	1	0	0	29
Hour	91	3	12	3	0	0	0	3	112	70	2	9	5	0	2	2	1	91
11:00	20	0	2	0	0	0	1	0	23	11	0	0	0	0	0	0	1	12
11:15	16	1	5	0	0	0	0	2	24	24	1	3	0	0	0	0	0	28
11:30	21	0	2	3	0	0	0	1	27	13	0	4	0	0	0	0	0	17
11:45	21	1	2	1	0	0	0	0	25	15	0	4	0	0	1	0	0	20
Hour	78	2	11	4	0	0	1	3	99	63	1	11	0	0	1	0	1	77
12:00	24	0	1	0	0	0	0	0	25	21	1	2	0	0	0	0	1	25
12:15	28	1	3	0	0	0	0	1	33	15	1	0	1	0	0	1	0	18
12:30	26	0	0	0	0	0	0	0	26	26	0	1	0	0	1	1	0	29
12:45	26	0	2	0	0	0	0	0	28	24	0	3	2	0	0	2	0	31
Hour	104	1	6	0	0	0	0	1	112	86	2	6	3	0	1	4	1	103
13:00	27	0	3	0	0	0	0	1	31	17	0	4	0	0	0	0	0	21
13:15	26	0	0	1	0	0	1	1	29	15	0	3	0	0	0	0	0	18
13:30	20	0	2	0	0	0	0	1	23	15	2	1	0	0	0	0	0	18
13:45	34	0	5	1	0	0	1	0	41	20	1	1	0	0	1	1	0	24
Hour	107	0	10	2	0	0	2	3	124	67	3	9	0	0	1	1	0	81
14:00	32	0	5	0	0	0	0	0	37	23	0	0	0	0	0	0	0	23
14:15	25	1	3	0	0	0	1	0	30	22	1	2	0	0	0	0	0	25
14:30	23	1	4	1	0	0	0	0	29	21	0	1	0	0	0	0	0	22
14:45	32	0	1	1	0	0	1	1	36	24	0	0	0	0	1	0	0	25
Hour	112	2	13	2	0	0	2	1	132	90	1	3	0	0	1	0	0	95
15:00	23	0	1	0	0	0	0	0	24	27	0	1	1	0	0	0	0	29
15:15	28	0	2	0	0	0	0	0	30	26	0	1	0	0	0	1	0	28
15:30	26	0	1	1	0	0	0	0	28	21	0	3	0	0	0	0	0	24
15:45	18	0	2	0	0	0	0	0	20	28	0	4	0	0	1	0	0	33
Hour	95	0	6	1	0	0	0	0	102	102	0	9	1	0	1	1	0	114
16:00	23	0	4	0	0	0	0	0	27	29	0	1	0	0	0	0	0	30
16:15	14	0	1	0	0	0	0	0	15	31	1	4	1	0	0	1	0	38
16:30	26	0	3	0	0	0	1	0	30	32	0	1	0	0	0	1	0	34
16:45	28	1	0	0	0	1	1	2	33	36	0	1	0	0	0	1	0	38
Hour	91	1	8	0	0	1	2	2	105	128	1	7	1	0	0	3	0	140
17:00	28	1	1	0	0	0	0	0	30	24	1	2	0	0	0	0	0	27
17:15	23	0	0	0	0	0	0	1	24	33	0	1	0	0	1	1	0	36
17:30	25	2	0	0	0	0	0	0	27	21	0	1	0	0	0	1	0	23
17:45	21	2	0	0	0	0	1	0	24	23	0	0	0	0	0	1	0	24
Hour	97	5	1	0	0	0	1	1	105	101	1	4	0	0	1	3	0	110
18:00	27	2	0	0	0	0	0	1	30	27	0	0	0	0	1	0	1	29
18:15	23	0	0	0	0	0	0	0	23	29	2	0	0	0	0	0	0	31
18:30	18	0	0	0	0	0	0	0	18	21	0	0	0	0	0	0	0	21
18:45	17	0	0	0	0	0	0	0	17	26	1	1	1	0	1	0	1	31
Hour	85	2	0	0	0	0	0	1	88	103	3	1	1	0	2	0	2	112
Total	1286	31	88	15	0	1	12	25	1458	1023	19	76	16	0	13	14	13	1174

Site No. 5
Location Kilgobbin Rd(N) / R113(W) / Kilgobbin Rd(S) / R113(E)
Date Tuesday 23 April 2024

Time	C to B - Kilgobbin Rd(S) to R113(W)								Veh. Total	C to A - Kilgobbin Rd(S) to Kilgobbin Rd(N)								Veh. Total
	CAR	TAXI	LGV	OGV1	OGV2	PSV	M/C	P/C		CAR	TAXI	LGV	OGV1	OGV2	PSV	M/C	P/C	
07:00	2	1	2	0	0	0	0	0	5	57	1	7	0	0	0	0	1	66
07:15	10	0	1	0	0	0	0	0	11	72	0	5	2	0	0	0	0	79
07:30	13	0	1	1	0	1	0	0	16	88	2	12	0	1	0	0	1	104
07:45	17	0	0	0	0	0	0	0	17	107	0	4	1	0	0	0	0	112
Hour	42	1	4	1	0	1	0	0	49	324	3	28	3	1	0	0	2	361
08:00	28	0	3	1	0	1	0	0	33	77	2	5	0	2	0	0	6	92
08:15	39	0	2	0	0	0	0	1	42	89	0	7	0	0	0	0	10	106
08:30	21	0	1	0	0	1	0	0	23	97	0	3	1	0	0	0	9	110
08:45	24	0	1	0	0	0	0	0	25	65	1	4	0	0	1	0	6	77
Hour	112	0	7	1	0	2	0	1	123	328	3	19	1	2	1	0	31	385
09:00	28	0	1	1	0	0	0	0	30	67	1	4	1	0	1	0	2	76
09:15	27	0	2	0	0	0	0	0	29	49	0	6	0	0	0	0	5	60
09:30	21	0	0	0	0	0	0	0	21	34	0	6	0	0	0	1	3	44
09:45	15	0	4	0	0	1	0	0	20	41	0	2	0	0	0	0	2	45
Hour	91	0	7	1	0	1	0	0	100	191	1	18	1	0	1	1	12	225
10:00	18	1	2	1	0	0	0	0	22	34	0	9	2	0	0	0	0	45
10:15	20	0	0	0	0	0	0	1	21	34	0	2	2	0	0	0	2	40
10:30	12	0	8	0	0	0	0	0	20	20	0	8	3	0	0	0	1	32
10:45	18	1	3	2	0	1	1	0	26	27	1	6	0	1	0	0	0	35
Hour	68	2	13	3	0	1	1	1	89	115	1	25	7	1	0	0	3	152
11:00	19	1	2	1	0	0	2	1	26	33	0	5	1	0	0	1	0	40
11:15	17	0	0	1	0	0	0	0	18	42	1	5	2	0	0	0	0	50
11:30	15	0	2	0	0	0	0	1	18	34	0	2	0	0	0	0	1	37
11:45	32	0	4	0	0	1	1	0	38	37	0	6	2	0	0	0	0	45
Hour	83	1	8	2	0	1	3	2	100	146	1	18	5	0	0	1	1	172
12:00	23	0	0	1	0	0	0	0	24	32	1	5	0	1	0	0	0	39
12:15	18	0	0	1	0	0	1	0	20	31	0	2	1	0	0	1	0	35
12:30	19	0	2	0	0	0	0	1	22	31	0	4	0	0	0	1	0	36
12:45	24	0	1	0	0	1	1	2	29	32	0	2	0	0	0	2	0	36
Hour	84	0	3	2	0	1	2	3	95	126	1	13	1	1	0	4	0	146
13:00	24	0	2	0	0	0	0	1	27	44	0	3	1	0	0	0	2	50
13:15	20	0	0	0	0	1	0	3	24	33	0	9	0	0	0	3	2	47
13:30	25	0	2	1	0	0	0	0	28	42	0	5	2	0	0	0	0	49
13:45	28	0	1	1	0	1	2	0	33	42	0	6	1	0	0	0	1	50
Hour	97	0	5	2	0	2	2	4	112	161	0	23	4	0	0	3	5	196
14:00	18	0	1	0	0	0	0	0	19	41	0	3	0	0	0	0	1	45
14:15	15	0	0	0	0	0	0	0	15	53	1	6	3	0	0	2	0	65
14:30	22	0	2	0	0	0	1	0	25	42	0	7	3	0	0	1	2	55
14:45	31	0	1	1	0	1	0	0	34	41	0	6	1	0	0	0	1	49
Hour	86	0	4	1	0	1	1	0	93	177	1	22	7	0	0	3	4	214
15:00	19	0	1	1	0	0	1	0	22	47	2	4	0	0	0	0	0	53
15:15	19	0	0	0	0	0	1	0	20	44	3	10	0	0	0	0	1	58
15:30	29	0	3	2	0	0	0	0	34	47	1	4	0	0	0	1	0	53
15:45	22	0	2	0	0	1	1	0	26	33	1	4	0	0	0	1	0	39
Hour	89	0	6	3	0	1	3	0	102	171	7	22	0	0	0	2	1	203
16:00	21	0	2	0	0	0	0	2	25	46	0	3	1	0	0	2	0	52
16:15	16	0	2	1	0	0	0	1	20	43	2	4	1	0	0	1	0	51
16:30	26	0	2	0	0	0	0	1	29	30	0	3	0	0	0	1	0	34
16:45	30	0	1	1	0	1	2	0	35	25	1	2	2	0	0	0	1	31
Hour	93	0	7	2	0	1	2	4	109	144	3	12	4	0	0	4	1	168
17:00	19	0	1	0	0	0	2	0	22	44	1	4	0	1	0	0	1	51
17:15	30	0	1	0	0	0	0	0	31	32	2	7	0	0	0	0	1	42
17:30	30	0	1	0	0	0	0	0	31	31	0	4	0	0	0	0	1	36
17:45	22	1	1	0	0	0	1	0	25	37	0	3	0	0	0	0	0	40
Hour	101	1	4	0	0	0	3	0	109	144	3	18	0	1	0	0	3	169
18:00	28	0	1	0	0	1	0	1	31	45	0	3	0	0	0	1	2	51
18:15	31	0	2	0	0	0	0	1	34	29	1	2	0	0	0	1	2	35
18:30	27	2	0	0	0	0	3	1	33	36	3	2	0	0	0	0	0	41
18:45	26	1	2	0	0	0	0	1	30	57	0	2	0	0	0	0	2	61
Hour	112	3	5	0	0	1	3	4	128	167	4	9	0	0	0	2	6	188
Total	1058	8	73	18	0	13	20	19	1209	2194	28	227	33	6	2	20	69	2579

Site No. 5
Location Kilgobbin Rd(N) / R113(W) / Kilgobbin Rd(S) / R113(E)
Date Tuesday 23 April 2024

Time	C to D - Kilgobbin Rd(S) to R113(E)								Veh. Total	D to C - R113(E) to Kilgobbin Rd(S)								Veh. Total
	CAR	TAXI	LGV	OGV1	OGV2	PSV	M/C	P/C		CAR	TAXI	LGV	OGV1	OGV2	PSV	M/C	P/C	
07:00	4	0	0	0	0	0	0	0	4	0	0	0	0	0	0	0	0	0
07:15	6	0	1	0	0	0	0	0	7	1	0	0	0	0	0	0	0	1
07:30	8	0	1	0	0	0	0	0	9	4	0	0	0	0	0	0	0	4
07:45	7	0	0	0	0	1	0	0	8	3	0	1	0	0	0	0	0	4
Hour	25	0	2	0	0	1	0	0	28	8	0	1	0	0	0	0	0	9
08:00	10	1	0	0	0	0	0	0	11	2	0	0	0	0	0	0	0	2
08:15	3	0	0	0	0	0	0	0	3	4	0	0	0	0	0	0	0	4
08:30	6	0	0	0	0	0	0	0	6	8	0	1	0	0	0	0	1	10
08:45	9	0	0	0	0	0	0	0	9	7	0	0	0	0	0	0	0	7
Hour	28	1	0	0	0	0	0	0	29	21	0	1	0	0	0	0	1	23
09:00	11	0	0	0	0	0	0	0	11	8	1	2	1	0	0	0	0	12
09:15	4	1	2	0	0	0	0	1	8	7	0	3	0	0	0	0	0	10
09:30	7	0	0	0	0	0	0	0	7	4	1	1	0	0	0	0	0	6
09:45	3	0	2	0	0	0	0	0	5	5	0	3	0	0	1	0	0	9
Hour	25	1	4	0	0	0	0	1	31	24	2	9	1	0	1	0	0	37
10:00	4	0	1	0	0	0	0	1	6	7	0	1	0	0	0	0	0	8
10:15	4	0	0	0	0	0	0	0	4	6	0	0	0	0	0	0	0	6
10:30	3	0	1	0	0	0	1	0	5	2	0	1	0	0	0	0	0	3
10:45	4	0	0	0	0	0	0	0	4	5	0	2	0	0	0	0	0	7
Hour	15	0	2	0	0	0	1	1	19	20	0	4	0	0	0	0	0	24
11:00	8	0	0	0	0	0	0	0	8	8	0	0	0	0	0	0	0	8
11:15	4	0	0	0	0	0	0	0	4	5	0	3	0	0	0	0	0	8
11:30	5	0	1	1	0	0	0	0	7	5	0	0	0	0	0	0	0	5
11:45	3	0	1	0	0	0	0	0	4	11	0	1	0	0	0	0	0	12
Hour	20	0	2	1	0	0	0	0	23	29	0	4	0	0	0	0	0	33
12:00	5	0	0	0	0	0	0	0	5	6	0	0	0	0	0	0	0	6
12:15	8	0	3	0	0	0	0	2	13	7	0	1	0	0	0	0	0	8
12:30	6	0	0	0	0	0	0	0	6	7	0	2	0	0	0	1	0	10
12:45	13	0	0	0	0	0	0	0	13	5	0	1	0	0	0	0	0	6
Hour	32	0	3	0	0	0	0	2	37	25	0	4	0	0	0	1	0	30
13:00	4	0	1	0	0	0	0	0	5	6	0	1	0	0	0	0	0	7
13:15	4	0	3	0	0	0	0	1	8	14	1	2	0	0	0	0	0	17
13:30	2	0	1	0	0	0	0	0	3	12	1	1	0	0	0	0	2	16
13:45	10	0	0	1	0	0	0	0	11	5	0	0	0	0	0	0	2	7
Hour	20	0	5	1	0	0	0	1	27	37	2	4	0	0	0	0	4	47
14:00	7	0	1	0	0	0	0	0	8	13	0	0	0	0	0	0	0	13
14:15	4	0	1	0	0	0	0	0	5	8	1	0	0	0	0	0	0	9
14:30	5	0	0	0	0	0	0	2	7	8	0	0	0	0	0	0	0	8
14:45	5	1	0	1	0	0	0	0	7	8	1	2	0	0	0	0	0	11
Hour	21	1	2	1	0	0	0	2	27	37	2	2	0	0	0	0	0	41
15:00	6	0	1	0	0	0	0	0	7	5	0	0	1	0	0	0	0	6
15:15	3	0	0	0	0	0	0	0	3	14	0	1	1	0	0	0	0	16
15:30	5	0	0	1	0	0	0	0	6	5	0	0	1	0	0	0	0	6
15:45	4	1	0	0	0	0	0	0	5	8	0	3	0	0	2	0	0	13
Hour	18	1	1	1	0	0	0	0	21	32	0	4	3	0	2	0	0	41
16:00	6	0	0	0	0	0	0	0	6	7	1	1	0	0	0	0	0	9
16:15	5	0	0	0	0	0	1	0	6	12	0	1	0	0	0	0	0	13
16:30	7	1	0	0	0	0	0	0	8	19	0	0	1	0	0	1	0	21
16:45	2	0	0	0	0	0	0	0	2	25	0	1	0	0	0	0	0	26
Hour	20	1	0	0	0	0	1	0	22	63	1	3	1	0	0	1	0	69
17:00	10	0	0	0	0	0	0	0	10	12	0	2	1	0	0	0	0	15
17:15	5	0	1	0	0	0	0	0	6	26	0	2	0	0	0	0	0	28
17:30	5	0	1	0	0	0	0	0	6	11	0	2	0	0	0	0	0	13
17:45	10	0	0	0	0	0	0	0	10	20	1	1	0	0	0	0	0	22
Hour	30	0	2	0	0	0	0	0	32	69	1	7	1	0	0	0	0	78
18:00	2	0	0	0	0	0	0	0	2	18	1	3	0	0	0	0	0	22
18:15	4	0	0	0	0	0	0	0	4	18	0	1	0	0	0	1	0	20
18:30	4	1	0	0	0	0	0	0	5	14	1	2	0	0	0	0	1	18
18:45	6	1	0	0	0	0	0	0	7	13	0	0	0	0	0	0	0	13
Hour	16	2	0	0	0	0	0	0	18	63	2	6	0	0	0	1	1	73
Total	270	7	23	4	0	1	2	7	314	428	10	49	6	0	3	3	6	505

Site No. 5
Location Kilgobbin Rd(N) / R113(W) / Kilgobbin Rd(S) / R113(E)
Date Tuesday 23 April 2024

Time	D to B - R113(E) to R113(W)								Veh. Total	D to A - R113(E) to Kilgobbin Rd(N)								Veh. Total
	CAR	TAXI	LGV	OGV1	OGV2	PSV	M/C	P/C		CAR	TAXI	LGV	OGV1	OGV2	PSV	M/C	P/C	
07:00	12	1	4	0	0	0	0	0	17	16	0	0	0	0	0	0	0	16
07:15	21	1	7	0	1	0	0	0	30	11	0	3	0	0	0	0	0	14
07:30	11	1	4	1	0	0	0	0	17	14	1	5	0	0	0	0	0	20
07:45	32	1	2	1	0	0	0	1	37	22	1	2	0	0	0	0	0	25
Hour	76	4	17	2	1	0	0	1	101	63	2	10	0	0	0	0	0	75
08:00	36	1	2	0	0	0	0	0	39	20	0	2	1	1	0	1	0	25
08:15	43	1	8	1	0	0	0	0	53	42	0	0	0	0	0	1	1	44
08:30	43	1	4	0	0	0	0	0	48	39	1	3	1	0	0	0	0	44
08:45	35	2	1	1	0	0	1	3	43	28	0	3	0	0	0	0	2	33
Hour	157	5	15	2	0	0	1	3	183	129	1	8	2	1	0	2	3	146
09:00	28	0	12	1	0	0	0	0	41	22	2	2	0	0	0	0	0	26
09:15	26	1	7	0	0	0	0	1	35	15	1	3	1	0	0	0	0	20
09:30	21	2	6	0	0	0	0	0	29	20	3	5	2	0	1	0	0	31
09:45	25	1	5	2	1	0	0	0	34	12	0	2	2	0	0	0	0	16
Hour	100	4	30	3	1	0	0	1	139	69	6	12	5	0	1	0	0	93
10:00	16	1	2	0	0	0	0	3	22	16	1	2	1	0	0	0	0	20
10:15	28	1	5	0	1	0	0	0	35	23	1	1	1	0	0	0	0	26
10:30	26	0	3	0	0	0	1	0	30	16	1	3	1	0	0	0	1	22
10:45	19	1	4	2	0	0	1	0	27	15	1	4	1	0	0	0	0	21
Hour	89	3	14	2	1	0	2	3	114	70	4	10	4	0	0	0	1	89
11:00	18	2	4	5	1	0	1	1	32	21	0	5	1	0	0	0	0	27
11:15	18	1	3	1	0	0	0	0	23	22	1	3	0	1	0	0	1	28
11:30	30	1	4	0	0	0	1	0	36	20	1	4	1	0	0	0	0	26
11:45	29	1	4	0	0	0	0	1	35	6	1	4	1	0	0	0	0	12
Hour	95	5	15	6	1	0	2	2	126	69	3	16	3	1	0	0	1	93
12:00	28	3	4	0	0	0	1	1	37	24	0	1	1	0	0	0	0	26
12:15	33	1	7	1	0	0	0	0	42	24	0	4	1	0	0	1	0	30
12:30	32	1	2	0	0	0	1	0	36	18	0	0	0	0	0	0	0	18
12:45	33	0	10	2	0	0	1	1	47	22	1	3	0	0	0	0	0	26
Hour	126	5	23	3	0	0	3	2	162	88	1	8	2	0	0	1	0	100
13:00	32	3	3	1	0	0	0	0	39	17	0	4	1	0	0	1	0	23
13:15	45	0	6	2	0	0	0	0	53	33	0	3	1	0	0	0	0	37
13:30	43	2	6	1	0	0	0	0	52	33	0	4	2	0	0	0	0	39
13:45	32	1	2	0	0	0	1	0	36	22	0	3	2	0	0	0	0	27
Hour	152	6	17	4	0	0	1	0	180	105	0	14	6	0	0	1	0	126
14:00	29	1	3	1	0	0	0	0	34	29	1	2	0	0	0	0	0	32
14:15	31	0	5	0	0	0	0	0	36	24	0	4	1	0	0	0	0	29
14:30	35	2	2	0	0	0	0	1	40	29	0	8	1	0	0	0	0	38
14:45	34	3	2	0	1	0	0	0	40	30	2	2	0	0	0	0	0	34
Hour	129	6	12	1	1	0	0	1	150	112	3	16	2	0	0	0	0	133
15:00	37	1	3	1	0	0	0	0	42	40	1	6	0	0	0	0	0	47
15:15	32	0	6	0	0	0	0	0	38	44	0	4	1	0	0	0	0	49
15:30	40	0	1	1	0	0	3	1	46	37	1	3	2	0	0	1	0	44
15:45	39	0	2	0	0	0	0	2	43	27	0	5	0	0	0	1	0	33
Hour	148	1	12	2	0	0	3	3	169	148	2	18	3	0	0	2	0	173
16:00	27	1	2	0	0	0	0	0	30	34	0	3	0	0	0	0	0	37
16:15	49	1	7	0	0	0	0	1	58	41	0	4	1	0	0	1	1	48
16:30	54	1	8	0	0	0	3	2	68	53	0	6	0	0	0	0	0	59
16:45	60	1	11	0	0	0	0	1	73	43	0	4	0	0	0	0	0	47
Hour	190	4	28	0	0	0	3	4	229	171	0	17	1	0	0	1	1	191
17:00	56	0	3	1	0	0	1	0	61	45	0	2	0	0	0	0	0	47
17:15	84	2	2	0	1	0	0	3	92	52	0	1	0	0	0	2	0	55
17:30	76	1	5	0	0	0	1	2	85	57	1	2	1	0	0	0	0	61
17:45	73	3	7	0	0	0	1	3	87	62	0	1	0	0	0	2	0	65
Hour	289	6	17	1	1	0	3	8	325	216	1	6	1	0	0	4	0	228
18:00	66	2	4	0	0	0	1	2	75	27	1	1	0	0	0	0	0	29
18:15	67	3	2	0	0	0	0	1	73	46	2	1	1	0	0	1	1	52
18:30	57	1	2	1	0	0	1	2	64	27	0	2	0	0	0	0	0	29
18:45	52	0	5	0	0	0	2	0	59	32	1	1	0	0	0	0	0	34
Hour	242	6	13	1	0	0	4	5	271	132	4	5	1	0	0	1	1	144
Total	1793	55	213	27	6	0	22	33	2149	1372	27	140	30	2	1	12	7	1591

Site No. 5
Location Kilgobbin Rd(N) / R113(W) / Kilgobbin Rd(S) / R113(E)
Date Tuesday 23 April 2024

Time	To Arm A - Kilgobbin Rd(N)								Veh. Total	From Arm A - Kilgobbin Rd(N)								Veh. Total
	CAR	TAXI	LGV	OGV1	OGV2	PSV	M/C	P/C		CAR	TAXI	LGV	OGV1	OGV2	PSV	M/C	P/C	
07:00	114	1	20	1	0	0	0	1	137	31	3	10	1	1	0	0	0	46
07:15	116	0	18	2	0	0	2	0	138	32	1	9	2	0	0	0	0	44
07:30	174	5	29	0	1	0	0	2	211	47	0	13	4	0	0	2	0	66
07:45	208	1	15	1	0	0	0	1	226	74	1	9	1	0	0	1	0	86
Hour	612	7	82	4	1	0	2	4	712	184	5	41	8	1	0	3	0	242
08:00	162	4	14	1	3	0	2	7	193	61	1	13	2	2	0	1	0	80
08:15	209	2	12	1	0	1	1	11	237	98	2	9	1	0	0	2	0	112
08:30	218	3	15	2	1	0	1	9	249	93	1	6	1	1	0	0	2	104
08:45	146	3	14	0	0	1	0	8	172	97	2	9	1	0	0	0	3	112
Hour	735	12	55	4	4	2	4	35	851	349	6	37	5	3	0	3	5	408
09:00	137	4	12	1	0	1	0	2	157	71	2	10	3	0	0	0	2	88
09:15	110	2	17	3	0	0	0	5	137	78	1	13	3	0	0	1	0	96
09:30	85	5	16	3	0	1	1	3	114	57	3	14	4	0	0	0	1	79
09:45	77	0	6	2	0	0	0	2	87	69	1	8	2	0	0	0	0	80
Hour	409	11	51	9	0	2	1	12	495	275	7	45	12	0	0	1	3	343
10:00	68	2	16	4	0	0	0	0	90	47	3	11	2	0	0	0	1	64
10:15	84	2	5	4	0	0	0	2	97	44	2	15	4	0	0	0	0	65
10:30	50	1	17	4	0	0	1	2	75	56	0	7	2	0	0	0	3	68
10:45	66	3	13	1	1	0	0	0	84	42	1	8	2	0	1	3	0	57
Hour	268	8	51	13	1	0	1	4	346	189	6	41	10	0	1	3	4	254
11:00	75	0	17	4	0	0	1	0	97	36	1	7	3	0	0	2	0	49
11:15	84	2	13	5	1	0	0	1	106	53	5	12	2	0	0	0	0	72
11:30	77	1	14	2	0	0	0	2	96	56	2	7	0	0	0	0	0	65
11:45	63	2	15	4	1	0	1	0	86	53	2	10	1	0	0	0	1	67
Hour	299	5	59	15	2	0	2	3	385	198	10	36	6	0	0	2	1	253
12:00	82	4	12	2	2	0	0	0	102	58	1	9	3	0	0	1	0	72
12:15	85	0	8	3	0	0	2	0	98	60	2	11	4	0	0	1	1	79
12:30	78	0	12	2	0	0	2	0	94	67	2	12	2	0	0	1	3	87
12:45	72	3	12	1	0	0	2	0	90	79	1	12	1	0	1	0	1	95
Hour	317	7	44	8	2	0	6	0	384	264	6	44	10	0	1	3	5	333
13:00	84	3	14	2	0	0	2	2	107	79	2	10	1	1	0	2	2	97
13:15	92	4	14	2	0	0	4	2	118	61	1	8	0	0	0	2	1	73
13:30	96	2	12	6	0	0	0	0	116	78	0	7	0	0	0	1	2	88
13:45	83	0	15	3	0	0	0	1	102	93	1	10	1	0	0	2	0	107
Hour	355	9	55	13	0	0	6	5	443	311	4	35	2	1	0	7	5	365
14:00	97	2	14	0	0	0	0	2	115	73	1	7	1	0	0	1	1	84
14:15	106	2	14	6	0	0	2	0	130	69	1	5	0	0	0	0	1	76
14:30	101	1	20	4	0	0	2	2	130	90	2	12	5	0	0	1	1	111
14:45	106	5	13	1	0	0	1	1	127	69	0	4	1	0	0	1	2	77
Hour	410	10	61	11	0	0	5	5	502	301	4	28	7	0	0	3	5	348
15:00	118	3	16	0	0	0	0	0	137	66	1	16	2	0	0	0	2	87
15:15	118	3	22	2	0	1	0	1	147	73	4	8	3	0	1	2	3	94
15:30	113	4	13	3	0	0	3	0	136	84	1	11	1	0	0	3	3	103
15:45	82	2	17	0	0	0	2	0	103	99	2	16	1	0	0	3	5	126
Hour	431	12	68	5	0	1	5	1	523	322	8	51	7	0	1	8	13	410
16:00	110	0	15	2	0	0	2	0	129	107	3	10	2	0	0	3	2	127
16:15	106	3	16	2	1	0	3	1	132	96	3	16	1	0	0	2	3	121
16:30	110	0	12	0	0	0	1	0	123	94	4	12	2	0	0	0	1	113
16:45	95	1	9	2	0	0	0	2	109	104	2	20	0	0	0	0	3	129
Hour	421	4	52	6	1	0	6	3	493	401	12	58	5	0	0	5	9	490
17:00	112	1	15	0	2	0	0	1	131	112	1	9	0	0	0	1	2	125
17:15	112	3	14	0	0	0	2	1	132	122	0	13	2	0	0	2	5	144
17:30	113	1	11	1	0	0	0	1	127	154	3	6	0	0	0	3	4	170
17:45	120	1	6	1	0	0	2	0	130	129	0	5	2	0	0	3	5	144
Hour	457	6	46	2	2	0	4	3	520	517	4	33	4	0	0	9	16	583
18:00	103	1	5	1	0	0	2	2	114	105	1	4	0	0	0	0	7	117
18:15	101	3	3	1	0	0	2	3	113	113	0	4	0	0	0	1	7	125
18:30	95	3	7	0	0	0	0	0	105	107	0	6	0	0	0	3	5	121
18:45	109	1	8	0	0	0	0	2	120	76	3	8	1	0	0	3	6	97
Hour	408	8	23	2	0	0	4	7	452	401	4	22	1	0	0	7	25	460
Total	5122	99	647	92	13	5	46	82	6106	3712	76	471	77	5	3	54	91	4489

Site No. 5
Location Kilgobbin Rd(N) / R113(W) / Kilgobbin Rd(S) / R113(E)
Date Tuesday 23 April 2024

Time	To Arm B - R113(W)								Veh. Total	From Arm B - R113(W)								Veh. Total
	CAR	TAXI	LGV	OGV1	OGV2	PSV	M/C	P/C		CAR	TAXI	LGV	OGV1	OGV2	PSV	M/C	P/C	
07:00	22	3	8	0	0	0	0	0	33	61	2	14	2	0	0	1	1	81
07:15	37	1	13	2	1	0	0	0	54	63	4	16	0	0	1	2	0	86
07:30	34	1	10	2	0	1	0	0	48	107	3	13	0	0	0	0	3	126
07:45	66	1	5	1	0	0	0	1	74	158	2	12	0	0	0	1	4	177
Hour	159	6	36	5	1	1	0	1	209	389	11	55	2	0	1	4	8	470
08:00	81	1	10	2	2	1	0	0	97	127	3	7	1	0	1	1	3	143
08:15	112	2	11	1	0	0	0	1	127	148	4	8	2	0	1	1	2	166
08:30	85	2	6	1	1	1	0	0	96	158	4	14	0	1	0	1	0	178
08:45	85	2	6	1	0	0	1	3	98	139	4	10	3	0	0	0	3	159
Hour	363	7	33	5	3	2	1	4	418	572	15	39	6	1	2	3	8	646
09:00	72	0	13	2	0	0	0	0	87	119	3	7	0	0	1	0	1	131
09:15	69	2	15	2	0	0	0	1	89	83	1	17	2	0	0	0	2	105
09:30	55	3	11	1	0	0	0	0	70	74	2	8	2	0	0	1	0	87
09:45	62	2	12	2	1	1	0	0	80	54	2	5	1	0	0	0	2	64
Hour	258	7	51	7	1	1	0	1	326	330	8	37	5	0	1	1	5	387
10:00	50	3	6	1	0	0	0	3	63	55	2	9	4	0	1	0	3	74
10:15	60	2	8	1	1	0	0	1	73	60	3	5	3	0	0	1	0	72
10:30	55	0	14	1	0	0	1	1	72	61	0	13	1	0	0	2	0	77
10:45	48	2	10	4	0	1	2	0	67	68	3	10	2	0	1	0	1	85
Hour	213	7	38	7	1	1	3	5	275	244	8	37	10	0	2	3	4	308
11:00	44	3	8	7	1	0	3	2	68	52	0	9	2	0	0	1	1	65
11:15	50	5	7	3	0	0	0	0	65	60	2	13	3	0	0	0	2	80
11:30	63	2	7	0	0	0	1	1	74	57	0	14	4	0	0	0	2	77
11:45	73	2	12	0	0	1	1	2	91	56	2	11	2	1	1	1	0	74
Hour	230	12	34	10	1	1	5	5	298	225	4	47	11	1	1	2	5	296
12:00	73	3	8	1	0	0	1	1	87	71	4	9	1	1	0	0	1	87
12:15	70	2	12	4	0	0	1	0	89	73	2	5	2	0	0	1	1	84
12:30	65	3	8	1	0	0	2	1	80	81	0	9	2	0	1	2	0	95
12:45	77	0	12	2	0	1	2	3	97	68	2	12	3	0	0	2	0	87
Hour	285	8	40	8	0	1	6	5	353	293	8	35	8	1	1	5	2	353
13:00	74	3	7	1	0	0	0	2	87	67	3	14	0	0	0	1	1	86
13:15	77	0	11	2	0	1	0	4	95	67	4	5	2	0	0	2	1	81
13:30	88	2	11	2	0	0	0	0	103	56	4	6	2	0	0	0	1	69
13:45	89	2	4	1	0	1	3	0	100	73	1	12	1	0	1	2	0	90
Hour	328	7	33	6	0	2	3	6	385	263	12	37	5	0	1	5	3	326
14:00	69	2	6	1	0	0	1	0	79	82	1	14	0	0	0	0	1	98
14:15	66	1	6	0	0	0	0	0	73	76	3	9	2	0	0	1	0	91
14:30	83	3	8	2	0	0	2	1	99	74	2	10	1	0	0	1	0	88
14:45	81	3	4	1	1	1	0	1	92	91	3	6	1	0	1	2	1	105
Hour	299	9	24	4	1	1	3	2	343	323	9	39	4	0	1	4	2	382
15:00	73	2	11	3	0	0	1	0	90	81	0	8	1	0	0	0	0	90
15:15	64	1	8	0	0	0	1	0	74	84	0	11	1	0	1	1	0	98
15:30	86	0	8	3	0	0	3	1	101	76	2	10	2	0	0	1	0	91
15:45	95	2	8	0	0	1	2	3	111	68	1	14	0	0	1	0	0	84
Hour	318	5	35	6	0	1	7	4	376	309	3	43	4	0	2	2	0	363
16:00	73	3	5	1	0	0	1	2	85	82	0	14	1	0	0	0	0	97
16:15	85	2	12	1	0	0	1	2	103	67	2	13	1	1	0	2	0	86
16:30	112	2	15	0	0	0	3	3	135	85	0	7	0	0	0	2	0	94
16:45	118	1	17	1	0	1	2	1	141	91	1	4	0	0	1	2	3	102
Hour	388	8	49	3	0	1	7	8	464	325	3	38	2	1	1	6	3	379
17:00	111	0	7	1	0	0	3	0	122	75	2	12	0	1	0	0	0	90
17:15	147	2	6	0	1	0	2	3	161	84	1	7	0	0	1	1	1	95
17:30	167	3	7	0	0	0	2	2	181	71	2	6	0	0	0	1	0	80
17:45	126	4	10	0	0	0	4	3	147	65	3	2	1	0	0	2	0	73
Hour	551	9	30	1	1	0	11	8	611	295	8	27	1	1	1	4	1	338
18:00	127	3	7	0	0	1	1	3	142	85	2	1	1	0	1	1	2	93
18:15	135	3	6	0	0	0	0	2	146	78	2	0	0	0	0	0	0	80
18:30	125	3	4	1	0	0	4	3	140	71	0	3	0	0	0	0	0	74
18:45	101	1	10	0	0	0	3	2	117	63	1	6	1	0	1	0	1	73
Hour	488	10	27	1	0	1	8	10	545	297	5	10	2	0	2	1	3	320
Total	3880	95	430	63	9	13	54	59	4603	3865	94	444	60	5	16	40	44	4568

Site No. 5
Location Kilgobbin Rd(N) / R113(W) / Kilgobbin Rd(S) / R113(E)
Date Tuesday 23 April 2024

Time	To Arm C - Kilgobbin Rd(S)								Veh. Total	From Arm C - Kilgobbin Rd(S)								Veh. Total
	CAR	TAXI	LGV	OGV1	OGV2	PSV	M/C	P/C		CAR	TAXI	LGV	OGV1	OGV2	PSV	M/C	P/C	
07:00	12	2	4	1	1	0	0	0	20	63	2	9	0	0	0	0	1	75
07:15	10	2	4	0	0	1	0	0	17	88	0	7	2	0	0	0	0	97
07:30	23	0	4	4	0	0	1	0	32	109	2	14	1	1	1	0	1	129
07:45	48	1	4	0	0	0	0	1	54	131	0	4	1	0	1	0	0	137
Hour	93	5	16	5	1	1	1	1	123	391	4	34	4	1	2	0	2	438
08:00	46	0	3	0	0	1	0	2	52	115	3	8	1	2	1	0	6	136
08:15	70	1	6	0	0	0	1	2	80	131	0	9	0	0	0	0	11	151
08:30	67	1	6	0	0	0	0	3	77	124	0	4	1	0	1	0	9	139
08:45	68	3	3	3	0	0	0	2	79	98	1	5	0	0	1	0	6	111
Hour	251	5	18	3	0	1	1	9	288	468	4	26	2	2	3	0	32	537
09:00	66	2	6	3	0	1	0	2	80	106	1	5	2	0	1	0	2	117
09:15	51	0	15	0	0	0	1	0	67	80	1	10	0	0	0	0	6	97
09:30	44	2	8	1	0	0	0	1	56	62	0	6	0	0	0	1	3	72
09:45	42	0	8	1	0	1	0	0	52	59	0	8	0	0	1	0	2	70
Hour	203	4	37	5	0	2	1	3	255	307	2	29	2	0	2	1	13	356
10:00	42	1	7	3	0	1	0	2	56	56	1	12	3	0	0	0	1	73
10:15	40	0	8	0	0	0	1	0	49	58	0	2	2	0	0	0	3	65
10:30	48	0	8	2	0	0	1	0	59	35	0	17	3	0	0	1	1	57
10:45	45	2	9	2	0	1	2	0	61	49	2	9	2	1	1	1	0	65
Hour	175	3	32	7	0	2	4	2	225	198	3	40	10	1	1	2	5	260
11:00	42	0	4	2	0	0	0	1	49	60	1	7	2	0	0	3	1	74
11:15	58	2	10	1	0	0	0	0	71	63	1	5	3	0	0	0	0	72
11:30	39	0	8	0	0	0	0	0	47	54	0	5	1	0	0	0	2	62
11:45	55	0	9	0	0	1	0	0	65	72	0	11	2	0	1	1	0	87
Hour	194	2	31	3	0	1	0	1	232	249	2	28	8	0	1	4	3	295
12:00	54	1	4	2	0	0	0	1	62	60	1	5	1	1	0	0	0	68
12:15	52	1	4	3	0	0	2	1	63	57	0	5	2	0	0	2	2	68
12:30	63	0	5	1	0	1	2	3	75	56	0	6	0	0	0	1	1	64
12:45	59	1	10	3	0	1	2	1	77	69	0	3	0	0	1	3	2	78
Hour	228	3	23	9	0	2	6	6	277	242	1	19	3	1	1	6	5	278
13:00	71	2	11	1	0	0	2	1	88	72	0	6	1	0	0	0	3	82
13:15	61	2	7	0	0	0	2	0	72	57	0	12	0	0	1	3	6	79
13:30	64	3	5	0	0	0	1	4	77	69	0	8	3	0	0	0	0	80
13:45	66	1	8	1	0	1	3	2	82	80	0	7	3	0	1	2	1	94
Hour	262	8	31	2	0	1	8	7	319	278	0	33	7	0	2	5	10	335
14:00	68	0	2	0	0	0	0	1	71	66	0	5	0	0	0	0	1	72
14:15	60	2	5	0	0	0	0	1	68	72	1	7	3	0	0	2	0	85
14:30	82	0	6	3	0	0	0	1	92	69	0	9	3	0	0	2	4	87
14:45	66	1	4	1	0	1	1	1	75	77	1	7	3	0	1	0	1	90
Hour	276	3	17	4	0	1	1	4	306	284	2	28	9	0	1	4	6	334
15:00	69	0	4	3	0	0	0	2	78	72	2	6	1	0	0	1	0	82
15:15	81	2	7	2	0	1	2	3	98	66	3	10	0	0	0	1	1	81
15:30	77	1	7	1	0	0	2	3	91	81	1	7	3	0	0	1	0	93
15:45	76	0	12	0	0	3	2	4	97	59	2	6	0	0	1	2	0	70
Hour	303	3	30	6	0	4	6	12	364	278	8	29	4	0	1	5	1	326
16:00	91	2	5	0	0	0	1	2	101	73	0	5	1	0	0	2	2	83
16:15	101	3	12	2	0	0	2	3	123	64	2	6	2	0	0	2	1	77
16:30	101	1	8	2	0	0	2	1	115	63	1	5	0	0	0	1	1	71
16:45	123	1	16	0	0	0	1	2	143	57	1	3	3	0	1	2	1	68
Hour	416	7	41	4	0	0	6	8	482	257	4	19	6	0	1	7	5	299
17:00	96	2	7	1	0	0	1	2	109	73	1	5	0	1	0	2	1	83
17:15	121	0	10	0	0	1	1	4	137	67	2	9	0	0	0	0	1	79
17:30	100	1	7	0	0	0	2	3	113	66	0	6	0	0	0	0	1	73
17:45	112	1	3	1	0	0	2	4	123	69	1	4	0	0	0	1	0	75
Hour	429	4	27	2	0	1	6	13	482	275	4	24	0	1	0	3	3	310
18:00	93	1	4	0	0	1	0	8	107	75	0	4	0	0	1	1	3	84
18:15	104	2	2	0	0	0	2	6	116	64	1	4	0	0	0	1	3	73
18:30	83	1	5	0	0	0	2	6	97	67	6	2	0	0	0	3	1	79
18:45	74	3	4	2	0	1	2	6	92	89	2	4	0	0	0	0	3	98
Hour	354	7	15	2	0	2	6	26	412	295	9	14	0	0	1	5	10	334
Total	3184	54	318	52	1	18	46	92	3765	3522	43	323	55	6	16	42	95	4102

Site No. 5
Location Kilgobbin Rd(N) / R113(W) / Kilgobbin Rd(S) / R113(E)
Date Tuesday 23 April 2024

Time	To Arm D - R113(E)								Veh. Total	From Arm D - R113(E)								Veh. Total
	CAR	TAXI	LGV	OGV1	OGV2	PSV	M/C	P/C		CAR	TAXI	LGV	OGV1	OGV2	PSV	M/C	P/C	
07:00	35	2	5	1	0	0	1	1	45	28	1	4	0	0	0	0	0	33
07:15	53	3	7	0	0	0	0	0	63	33	1	10	0	1	0	0	0	45
07:30	61	1	6	0	0	0	1	2	71	29	2	9	1	0	0	0	0	41
07:45	98	2	6	1	0	1	2	2	112	57	2	5	1	0	0	0	1	66
Hour	247	8	24	2	0	1	4	5	291	147	6	28	2	1	0	0	1	185
08:00	72	3	5	2	0	0	1	0	83	58	1	4	1	1	0	1	0	66
08:15	75	2	5	2	0	0	2	0	86	89	1	8	1	0	0	1	1	101
08:30	95	1	5	0	0	0	0	0	101	90	2	8	1	0	0	0	1	102
08:45	105	1	5	1	0	0	0	4	116	70	2	4	1	0	0	1	5	83
Hour	347	7	20	5	0	0	3	4	386	307	6	24	4	1	0	3	7	352
09:00	79	3	7	1	0	0	0	1	91	58	3	16	2	0	0	0	0	79
09:15	59	1	6	1	0	0	0	3	70	48	2	13	1	0	0	0	1	65
09:30	54	1	5	3	0	0	1	0	64	45	6	12	2	0	1	0	0	66
09:45	43	2	5	2	0	0	0	2	54	42	1	10	4	1	1	0	0	59
Hour	235	7	23	7	0	0	1	6	279	193	12	51	9	1	2	0	1	269
10:00	37	2	8	2	0	0	0	3	52	39	2	5	1	0	0	0	3	50
10:15	35	3	7	5	0	0	0	0	50	57	2	6	1	1	0	0	0	67
10:30	43	0	5	0	0	0	1	2	51	44	1	7	1	0	0	1	1	55
10:45	39	1	5	2	0	1	1	1	50	39	2	10	3	0	0	1	0	55
Hour	154	6	25	9	0	1	2	6	203	179	7	28	6	1	0	2	4	227
11:00	34	1	3	0	0	0	3	0	41	47	2	9	6	1	0	1	1	67
11:15	29	1	9	0	0	0	0	2	41	45	2	9	1	1	0	0	1	59
11:30	43	1	5	4	0	0	0	1	54	55	2	8	1	0	0	1	0	67
11:45	36	2	5	2	0	0	0	0	45	46	2	9	1	0	0	0	1	59
Hour	142	5	22	6	0	0	3	3	181	193	8	35	9	2	0	2	3	252
12:00	38	1	4	1	0	0	1	0	45	58	3	5	1	0	0	1	1	69
12:15	47	2	9	0	0	0	0	3	61	64	1	12	2	0	0	1	0	80
12:30	55	0	6	0	0	0	0	0	61	57	1	4	0	0	0	2	0	64
12:45	68	0	7	0	0	0	0	0	75	60	1	14	2	0	0	1	1	79
Hour	208	3	26	1	0	0	1	3	242	239	6	35	5	0	0	5	2	292
13:00	44	0	6	0	1	0	0	1	52	55	3	8	2	0	0	1	0	69
13:15	47	0	4	1	0	0	1	2	55	92	1	11	3	0	0	0	0	107
13:30	43	0	4	0	0	0	0	1	48	88	3	11	3	0	0	0	2	107
13:45	67	0	7	2	0	0	1	0	77	59	1	5	2	0	0	1	2	70
Hour	201	0	21	3	1	0	2	4	232	294	8	35	10	0	0	2	4	353
14:00	58	0	9	1	0	0	0	0	68	71	2	5	1	0	0	0	0	79
14:15	48	1	5	0	0	0	1	0	55	63	1	9	1	0	0	0	0	74
14:30	39	2	7	1	0	0	0	2	51	72	2	10	1	0	0	0	1	86
14:45	56	1	2	2	0	0	1	1	63	72	6	6	0	1	0	0	0	85
Hour	201	4	23	4	0	0	2	3	237	278	11	30	3	1	0	0	1	324
15:00	41	0	8	0	0	0	0	0	49	82	2	9	2	0	0	0	0	95
15:15	50	1	3	2	0	0	1	0	57	90	0	11	2	0	0	0	0	103
15:30	47	0	4	3	0	0	1	0	55	82	1	4	4	0	0	4	1	96
15:45	47	1	9	1	0	0	0	0	58	74	0	10	0	0	2	1	2	89
Hour	185	2	24	6	0	0	2	0	219	328	3	34	8	0	2	5	3	383
16:00	56	0	10	1	0	0	1	0	68	68	2	6	0	0	0	0	0	76
16:15	37	0	7	0	0	0	1	0	45	102	1	12	1	0	0	1	2	119
16:30	45	3	3	1	0	0	1	0	53	126	1	14	1	0	0	4	2	148
16:45	44	2	1	0	0	1	1	3	52	128	1	16	0	0	0	0	1	146
Hour	182	5	21	2	0	1	4	3	218	424	5	48	2	0	0	5	5	489
17:00	54	1	4	0	0	0	0	0	59	113	0	7	2	0	0	1	0	123
17:15	55	0	4	2	0	0	0	2	63	162	2	5	0	1	0	2	3	175
17:30	55	2	2	0	0	0	1	1	61	144	2	9	1	0	0	1	2	159
17:45	60	2	1	1	0	0	1	1	66	155	4	9	0	0	0	3	3	174
Hour	224	5	11	3	0	0	2	4	249	574	8	30	3	1	0	7	8	631
18:00	53	2	1	0	0	0	0	1	57	111	4	8	0	0	0	1	2	126
18:15	46	0	1	0	0	0	0	1	48	131	5	4	1	0	0	2	2	145
18:30	40	1	1	0	0	0	1	0	43	98	2	6	1	0	0	1	3	111
18:45	41	2	2	0	0	0	0	0	45	97	1	6	0	0	0	2	0	106
Hour	180	5	5	0	0	0	1	2	193	437	12	24	2	0	0	6	7	488
Total	2506	57	245	48	1	3	27	43	2930	3593	92	402	63	8	4	37	46	4245

15320 / Blackglen Dublin 18
April 2024
General Location Plan



15320 / Blackglen Dublin 18
April 2024
General Location Plan

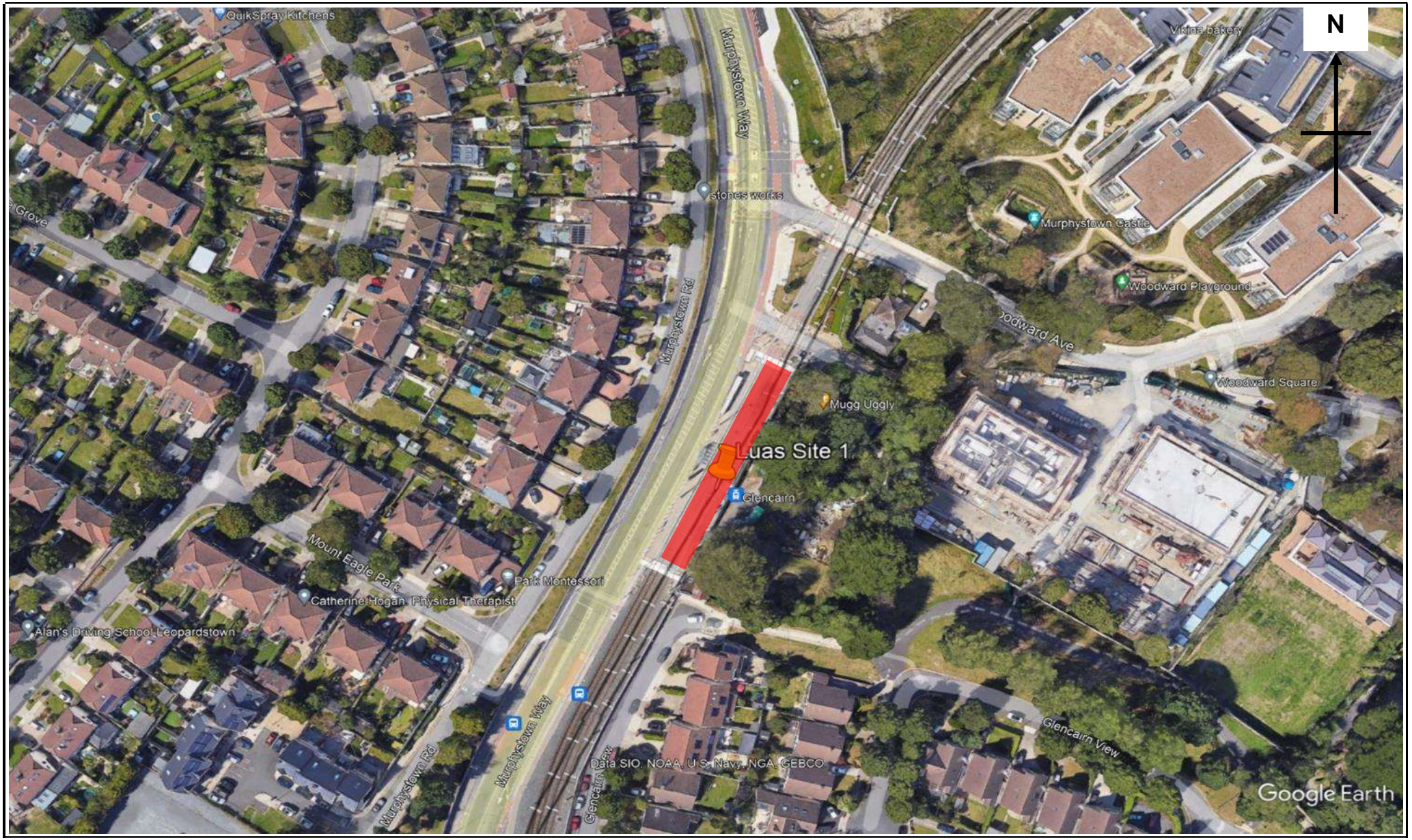

Site No. 1
Location R113 West
Date Tuesday 23 April 2024

TFI Double Decker Bus – 66 seats on the whole bus **21 downstairs and 45 upstairs** **95 at full capacity – 29 standing and 66 seated**

Bus Arrival Time	Bus Service Provider	Bus Route Number	Bus Type	Estimated Seating Capacity	Number boarding the bus	Number alighting the bus	Bus occupancy on arrival (0% Empty, 25%, 50%, 75%, 100% Full)	Note of buses that did not stop	Comments
07:09:56	TFI	114	Double Decker	66	N/A	N/A	25%	Didn't stop	
07:32:23	TFI	448	Single Decker	45	1	0	25%		
07:46:22	TFI	114	Double Decker	66	4	0	50%		
08:30:18	No Operator	No Number	Single Decker	45	N/A	N/A	25%	Didn't stop	
08:30:56	TFI	448	Single Decker	45	N/A	N/A	25%	Didn't stop	
08:36:26	TFI	114	Double Decker	66	N/A	N/A	50%	Didn't stop	
08:40:30	No Operator	No Number	Coach	35	N/A	N/A	25%	Didn't stop	
09:36:39	TFI	448	Single Decker	45	N/A	N/A	25%	Didn't stop	
09:44:22	TFI	114	Double Decker	66	N/A	N/A	25%	Didn't stop	
16:50:41	TFI	448	Single Decker	45	N/A	N/A	25%	Didn't stop	
17:10:21	TFI	114	Double Decker	66	N/A	N/A	Empty	Didn't stop	
17:39:07	TFI	114	Double Decker	66	N/A	N/A	25%	Didn't stop	
18:27:38	TFI	448	Single Decker	45	N/A	N/A	25%	Didn't stop	
18:50:31	TFI	Not in Service	Double Decker	66	N/A	N/A	Empty	Didn't stop	

Site No. 2
Location R113 East
Date Tuesday 23 April 2024

TFI Double Decker Bus – 66 seats on the whole bus **21 downstairs and 45 upstairs** **95 at full capacity – 29 standing and 66 seated**

Bus Arrival Time	Bus Service Provider	Bus Route Number	Bus Type	Estimated Seating Capacity	Number boarding the bus	Number alighting the bus	Bus occupancy on arrival (0% Empty, 25%, 50%, 75%, 100% Full)	Note of buses that did not stop	Comments
07:28:26	TFI	Not in service	Double Decker	66	N/A	N/A	Empty	Didn't stop	
07:54:51	TFI	448	Single Decker	45	N/A	N/A	25%	Didn't stop	
08:26:22	TFI	114	Double Decker	66	N/A	N/A	25%	Didn't stop	
08:40:59	No Operator	No Number	Coach	35	N/A	N/A	25%	Didn't stop	
08:49:31	No Operator	No Number	Coach	35	N/A	N/A	Not Visible	Didn't stop	Tinted Windows
09:02:08	TFI	448	Single Decker	45	0	2	25%		
09:24:13	TFI	114	Double Decker	66	N/A	N/A	25%	Didn't stop	
09:38:58	Tony Doyle	No Number	Coach	45	N/A	N/A	Not Visible	Didn't stop	Tinted Windows
16:15:07	No Operator	No Number	Coach	35	N/A	N/A	Not Visible	Didn't stop	Tinted Windows
16:40:51	TFI	114	Double Decker	66	N/A	N/A	25%	Didn't stop	
17:28:42	TFI	114	Double Decker	66	N/A	N/A	25%	Didn't stop	
17:47:02	TFI	448	Single Decker	45	0	1	25%		
18:23:15	No Operator	No Number	Coach	35	N/A	N/A	Not Visible	Didn't stop	Tinted Windows
18:35:26	TFI	114	Double Decker	66	N/A	N/A	25%	Didn't stop	

Site No. 1
Location Glencairn Luas Stop
Date Tuesday 23 April 2024

Luas – 96 seats on the whole tram **358 at full capacity – i.e. 262 standing and 96 seated**

Luas Arrival Time	Direction	Estimated Seat Capacity	Number boarding the Luas	Number alighting the Luas	Luas occupancy on arrival (0% Empty, 25%, 50%, 75%, 100% Full)	Comments
07:00:06	South	96	3	1	25%	
07:05:50	North	96	13	2	50%	
07:09:02	South	96	1	7	25%	
07:14:29	North	96	15	1	50%	
07:18:33	South	96	1	8	50%	
07:23:34	South	96	1	6	25%	
07:27:01	North	96	24	2	75%	
07:28:50	South	96	4	5	25%	
07:32:54	South	96	4	4	25%	
07:36:14	North	96	32	2	75%	
07:37:10	South	96	0	3	25%	
07:42:07	North	96	53	3	100%	
07:44:53	South	96	3	5	25%	
07:50:42	North	96	31	5	75%	
07:50:56	South	96	6	7	50%	
07:55:47	South	96	7	6	25%	
07:59:31	North	96	56	7	75%	
08:00:05	South	96	1	3	25%	
08:01:33	North	96	40	5	75%	
08:05:23	South	96	6	5	50%	
08:08:54	North	96	58	7	100%	
08:11:13	South	96	14	2	25%	
08:13:26	North	96	35	3	100%	
08:16:31	South	96	9	6	50%	
08:19:13	North	96	41	5	100%	
08:22:51	North	96	33	3	75%	
08:24:31	South	96	11	5	50%	
08:31:18	North	96	35	0	100%	
08:32:34	South	96	5	7	50%	
08:38:31	North	96	45	3	75%	
08:39:31	North	96	15	0	50%	
08:42:57	South	96	5	10	75%	
08:47:21	North	96	25	1	100%	
08:50:01	South	96	7	12	50%	
08:52:09	North	96	18	4	75%	
08:55:37	North	96	16	2	50%	
09:00:49	South	96	2	7	25%	
09:05:40	North	96	30	0	100%	
09:07:29	South	96	2	6	50%	
09:16:50	North	96	21	3	50%	
09:18:46	South	96	4	4	50%	
09:27:07	North	96	19	0	50%	
09:29:34	South	96	4	2	25%	
09:36:47	South	96	3	1	25%	
09:36:59	North	96	12	0	50%	
09:46:45	North	96	12	0	50%	
09:49:20	South	96	1	5	25%	
09:51:59	North	96	10	0	25%	
09:54:33	South	96	2	6	25%	
16:02:45	South	96	1	26	75%	
16:06:12	North	96	17	8	50%	
16:08:59	South	96	1	25	75%	
16:14:16	North	96	8	5	50%	
16:22:37	North	96	9	7	50%	
16:25:33	South	96	15	41	100%	
16:30:15	North	96	12	17	50%	
16:34:13	South	96	4	30	100%	
16:38:28	North	96	15	5	50%	
16:41:54	South	96	2	34	100%	
16:45:50	North	96	9	7	75%	
16:50:40	South	96	1	20	100%	
16:58:02	North	96	16	7	75%	
17:03:30	South	96	3	50	75%	
17:09:37	North	96	8	2	75%	
17:13:03	South	96	0	40	75%	
17:19:40	North	96	11	2	50%	
17:21:41	South	96	3	38	75%	
17:25:14	North	96	8	3	50%	
17:29:28	South	96	5	49	75%	
17:38:05	North	96	22	6	75%	
17:43:23	South	96	12	64	100%	
17:45:03	North	96	19	7	50%	
17:50:41	South	96	1	50	75%	
17:55:24	North	96	12	3	75%	
17:56:55	South	96	4	43	100%	
18:02:48	South	96	0	39	100%	
18:04:22	North	96	16	4	50%	
18:15:05	South	96	8	54	100%	
18:16:14	North	96	26	4	50%	
18:24:51	South	96	2	53	100%	
18:30:03	North	96	15	13	50%	
18:30:11	South	96	0	22	100%	
18:32:51	North	96	4	0	25%	
18:38:20	South	96	2	40	100%	
18:39:25	North	96	10	6	25%	
18:43:42	South	96	0	33	100%	
18:52:10	North	96	13	5	50%	
18:52:38	South	96	3	36	100%	
18:58:37	North	96	4	3	25%	
18:58:55	South	96	3	28	100%	

Appendix C TRICS OUTPUT FILE

O'Connor Sutton Cronin 9 Prussia Street Dublin Licence No: 322901

Calculation Reference: AUDIT-322901-240507-0539

TRIP RATE CALCULATION SELECTION PARAMETERS:

Land Use : 03 - RESIDENTIAL
Category : K - MIXED PRIV HOUS (FLATS AND HOUSES)
TOTAL VEHICLES

Selected regions and areas:

02	SOUTH EAST		
	WS	WEST SUSSEX	2 days
04	EAST ANGLIA		
	CA	CAMBRIDGESHIRE	1 days
05	EAST MIDLANDS		
	NG	NOTTINGHAM	1 days

This section displays the number of survey days per TRICS® sub-region in the selected set

Primary Filtering selection:

This data displays the chosen trip rate parameter and its selected range. Only sites that fall within the parameter range are included in the trip rate calculation.

Parameter: No of Dwellings
Actual Range: 65 to 371 (units:)
Range Selected by User: 15 to 1099 (units:)

Parking Spaces Range: All Surveys Included

Parking Spaces per Dwelling Range: All Surveys Included

Bedrooms per Dwelling Range: All Surveys Included

Percentage of dwellings privately owned: All Surveys Included

Public Transport Provision:
Selection by: Monday-Friday 0700-1900
Include days where PT not known: Yes
Range: 7 to 60

Date Range: 01/01/16 to 05/07/23

This data displays the range of survey dates selected. Only surveys that were conducted within this date range are included in the trip rate calculation.

Selected survey days:

Monday	1 days
Wednesday	2 days
Thursday	1 days

This data displays the number of selected surveys by day of the week.

Selected survey types:

Manual count	4 days
Directional ATC Count	0 days

This data displays the number of manual classified surveys and the number of unclassified ATC surveys, the total adding up to the overall number of surveys in the selected set. Manual surveys are undertaken using staff, whilst ATC surveys are undertaking using machines.

Selected Locations:

Suburban Area (PPS6 Out of Centre)	2
Edge of Town	2

This data displays the number of surveys per main location category within the selected set. The main location categories consist of Free Standing, Edge of Town, Suburban Area, Neighbourhood Centre, Edge of Town Centre, Town Centre and Not Known.

Selected Location Sub Categories:

Residential Zone	3
No Sub Category	1

This data displays the number of surveys per location sub-category within the selected set. The location sub-categories consist of Commercial Zone, Industrial Zone, Development Zone, Residential Zone, Retail Zone, Built-Up Zone, Village, Out of Town, High Street and No Sub Category.

Inclusion of Servicing Vehicles Counts:

Servicing vehicles Included	2 days - Selected
Servicing vehicles Excluded	5 days - Selected

Secondary Filtering selection:

Use Class:

C3	4 days

This data displays the number of surveys per Use Class classification within the selected set. The Use Classes Order (England) 2020 has been used for this purpose, which can be found within the Library module of TRICS®.

Population within 500m Range:
All Surveys Included

Secondary Filtering selection (Cont.):

Population within 1 mile:

1,001 to 5,000	1 days
5,001 to 10,000	1 days
10,001 to 15,000	2 days

This data displays the number of selected surveys within stated 1-mile radii of population.

Population within 5 miles:

25,001 to 50,000	1 days
75,001 to 100,000	1 days
100,001 to 125,000	1 days
250,001 to 500,000	1 days

This data displays the number of selected surveys within stated 5-mile radii of population.

Car ownership within 5 miles:

1.1 to 1.5	3 days
1.6 to 2.0	1 days

This data displays the number of selected surveys within stated ranges of average cars owned per residential dwelling, within a radius of 5-miles of selected survey sites.

Travel Plan:

Yes	3 days
No	1 days

This data displays the number of surveys within the selected set that were undertaken at sites with Travel Plans in place, and the number of surveys that were undertaken at sites without Travel Plans.

PTAL Rating:

No PTAL Present	4 days

This data displays the number of selected surveys with PTAL Ratings.

LIST OF SITES relevant to selection parameters

1 CA-03-K-04 MIXED HOUSES & FLATS CAMBRIDGESHIRE
FORDHAM ROAD
SOHAM

Suburban Area (PPS6 Out of Centre)
Residential Zone
Total No of Dwellings: 65
Survey date: WEDNESDAY *11/07/18* *Survey Type: MANUAL*

2 NG-03-K-02 MIXED HOUSES NOTTINGHAM
CASTLE BRIDGE ROAD
NOTTINGHAM

Suburban Area (PPS6 Out of Centre)
No Sub Category
Total No of Dwellings: 132
Survey date: MONDAY *07/11/16* *Survey Type: MANUAL*

3 WS-03-K-01 MIXED HOUSES & FLATS WEST SUSSEX
SHOPWHYKE ROAD
CHICHESTER

Edge of Town
Residential Zone
Total No of Dwellings: 336
Survey date: WEDNESDAY *05/07/23* *Survey Type: MANUAL*

4 WS-03-K-04 MIXED HOUSES & FLATS WEST SUSSEX
HILLS FARM LANE
HORSHAM
BROADBRIDGE HEATH
Edge of Town
Residential Zone
Total No of Dwellings: 371
Survey date: THURSDAY *28/06/18* *Survey Type: MANUAL*

This section provides a list of all survey sites and days in the selected set. For each individual survey site, it displays a unique site reference code and site address, the selected trip rate calculation parameter and its value, the day of the week and date of each survey, and whether the survey was a manual classified count or an ATC count.

MANUALLY DESELECTED SITES

Site Ref	Reason for Deselection
CW-03-K-01	Parking
HC-03-K-07	Parking
TI-03-K-01	PT

TRIP RATE for Land Use 03 - RESIDENTIAL/K - MIXED PRIV HOUS (FLATS AND HOUSES)
TOTAL VEHICLES
Calculation factor: 1 DWELLS
BOLD print indicates peak (busiest) period

	ARRIVALS			DEPARTURES			TOTALS		
Time Range	No. Days	Ave. DWELLS	Trip Rate	No. Days	Ave. DWELLS	Trip Rate	No. Days	Ave. DWELLS	Trip Rate
00:00 - 01:00									
01:00 - 02:00									
02:00 - 03:00									
03:00 - 04:00									
04:00 - 05:00									
05:00 - 06:00									
06:00 - 07:00									
07:00 - 08:00	4	226	0.094	4	226	0.263	4	226	0.357
08:00 - 09:00	4	226	0.122	4	226	0.277	4	226	0.399
09:00 - 10:00	4	226	0.125	4	226	0.167	4	226	0.292
10:00 - 11:00	4	226	0.146	4	226	0.138	4	226	0.284
11:00 - 12:00	4	226	0.097	4	226	0.106	4	226	0.203
12:00 - 13:00	4	226	0.135	4	226	0.118	4	226	0.253
13:00 - 14:00	4	226	0.154	4	226	0.153	4	226	0.307
14:00 - 15:00	4	226	0.139	4	226	0.170	4	226	0.309
15:00 - 16:00	4	226	0.213	4	226	0.164	4	226	0.377
16:00 - 17:00	4	226	0.216	4	226	0.175	4	226	0.391
17:00 - 18:00	4	226	0.240	4	226	0.154	4	226	0.394
18:00 - 19:00	4	226	0.272	4	226	0.145	4	226	0.417
19:00 - 20:00									
20:00 - 21:00									
21:00 - 22:00									
22:00 - 23:00									
23:00 - 24:00									
Total Rates:			1.953			2.030			3.983

This section displays the trip rate results based on the selected set of surveys and the selected count type (shown just above the table). It is split by three main columns, representing arrivals trips, departures trips, and total trips (arrivals plus departures). Within each of these main columns are three sub-columns. These display the number of survey days where count data is included (per time period), the average value of the selected trip rate calculation parameter (per time period), and the trip rate result (per time period). Total trip rates (the sum of the column) are also displayed at the foot of the table.

*To obtain a trip rate, the average (mean) trip rate parameter value (TRP) is first calculated for all selected survey days that have count data available for the stated time period. The average (mean) number of arrivals, departures or totals (whichever applies) is also calculated (COUNT) for all selected survey days that have count data available for the stated time period. Then, the average count is divided by the average trip rate parameter value, and multiplied by the stated calculation factor (shown just above the table and abbreviated here as FACT). So, the method is: COUNT/TRP*FACT. Trip rates are then rounded to 3 decimal places.*

The survey data, graphs and all associated supporting information, contained within the TRICS Database are published by TRICS Consortium Limited ("the Company") and the Company claims copyright and database rights in this published work. The Company authorises those who possess a current TRICS licence to access the TRICS Database and copy the data contained within the TRICS Database for the licence holders' use only. Any resulting copy must retain all copyrights and other proprietary notices, and any disclaimer contained thereon.

The Company accepts no responsibility for loss which may arise from reliance on data contained in the TRICS Database. [No warranty of any kind, express or implied, is made as to the data contained in the TRICS Database.]

Parameter summary

Trip rate parameter range selected:	65 - 371 (units:)
Survey date date range:	01/01/16 - 05/07/23
Number of weekdays (Monday-Friday):	4
Number of Saturdays:	0
Number of Sundays:	0
Surveys automatically removed from selection:	0
Surveys manually removed from selection:	3

This section displays a quick summary of some of the data filtering selections made by the TRICS® user. The trip rate calculation parameter range of all selected surveys is displayed first, followed by the range of minimum and maximum survey dates selected by the user. Then, the total number of selected weekdays and weekend days in the selected set of surveys are show. Finally, the number of survey days that have been manually removed from the selected set outside of the standard filtering procedure are displayed.

O'Connor Sutton Cronin 9 Prussia Street Dublin Licence No: 322901

Calculation Reference: AUDIT-322901-240507-0556

TRIP RATE CALCULATION SELECTION PARAMETERS:

Land Use : 04 - EDUCATION
Category : D - NURSERY
TOTAL VEHICLES

Selected regions and areas:

05	EAST MIDLANDS		
	NN	NORTH NORTHAMPTONSHIRE	1 days
06	WEST MIDLANDS		
	WK	WARWICKSHIRE	1 days

This section displays the number of survey days per TRICS® sub-region in the selected set

Primary Filtering selection:

This data displays the chosen trip rate parameter and its selected range. Only sites that fall within the parameter range are included in the trip rate calculation.

Parameter:	Gross floor area
Actual Range:	340 to 850 (units: sqm)
Range Selected by User:	109 to 2350 (units: sqm)

Parking Spaces Range: All Surveys Included

Public Transport Provision:

Selection by:	Monday-Friday 0700-1900
Include days where PT not known:	Yes
Range:	5 to 70

Date Range: 01/01/16 to 02/05/23

This data displays the range of survey dates selected. Only surveys that were conducted within this date range are included in the trip rate calculation.

Selected survey days:

Tuesday	1 days
Friday	1 days

This data displays the number of selected surveys by day of the week.

Selected survey types:

Manual count	2 days
Directional ATC Count	0 days

This data displays the number of manual classified surveys and the number of unclassified ATC surveys, the total adding up to the overall number of surveys in the selected set. Manual surveys are undertaken using staff, whilst ATC surveys are undertaking using machines.

Selected Locations:

Suburban Area (PPS6 Out of Centre)	1
Edge of Town	1

This data displays the number of surveys per main location category within the selected set. The main location categories consist of Free Standing, Edge of Town, Suburban Area, Neighbourhood Centre, Edge of Town Centre, Town Centre and Not Known.

Selected Location Sub Categories:

Residential Zone	2

This data displays the number of surveys per location sub-category within the selected set. The location sub-categories consist of Commercial Zone, Industrial Zone, Development Zone, Residential Zone, Retail Zone, Built-Up Zone, Village, Out of Town, High Street and No Sub Category.

Inclusion of Servicing Vehicles Counts:

Servicing vehicles Included	1 days - Selected
Servicing vehicles Excluded	4 days - Selected

Secondary Filtering selection:

Use Class:

E(f)	2 days

This data displays the number of surveys per Use Class classification within the selected set. The Use Classes Order (England) 2020 has been used for this purpose, which can be found within the Library module of TRICS®.

Population within 500m Range:

All Surveys Included

Secondary Filtering selection (Cont.):

Population within 1 mile:

5,001 to 10,000	1 days
25,001 to 50,000	1 days

This data displays the number of selected surveys within stated 1-mile radii of population.

Population within 5 miles:

50,001 to 75,000	1 days
75,001 to 100,000	1 days

This data displays the number of selected surveys within stated 5-mile radii of population.

Car ownership within 5 miles:

1.1 to 1.5	2 days

This data displays the number of selected surveys within stated ranges of average cars owned per residential dwelling, within a radius of 5-miles of selected survey sites.

Travel Plan:

No	2 days

This data displays the number of surveys within the selected set that were undertaken at sites with Travel Plans in place, and the number of surveys that were undertaken at sites without Travel Plans.

PTAL Rating:

No PTAL Present	2 days

This data displays the number of selected surveys with PTAL Ratings.

LIST OF SITES relevant to selection parameters

1 NN-04-D-01 NURSERY NORTH NORTHAMPTONSHIRE
ROCKINGHAM ROAD
KETTERING

Suburban Area (PPS6 Out of Centre)
Residential Zone
Total Gross floor area: 850 sqm
Survey date: TUESDAY *07/06/22* *Survey Type: MANUAL*

2 WK-04-D-01 NURSERY WARWICKSHIRE
THE RIDGEWAY
STRATFORD UPON AVON

Edge of Town
Residential Zone
Total Gross floor area: 340 sqm
Survey date: FRIDAY *29/06/18* *Survey Type: MANUAL*

This section provides a list of all survey sites and days in the selected set. For each individual survey site, it displays a unique site reference code and site address, the selected trip rate calculation parameter and its value, the day of the week and date of each survey, and whether the survey was a manual classified count or an ATC count.

MANUALLY DESELECTED SITES

Site Ref	Reason for Deselection
BR-04-D-01	Parking
DU-04-D-01	Parking
NY-04-D-02	Parking

TRIP RATE for Land Use 04 - EDUCATION/D - NURSERY
TOTAL VEHICLES
Calculation factor: 100 sqm
BOLD print indicates peak (busiest) period

	ARRIVALS			DEPARTURES			TOTALS		
Time Range	No. Days	Ave. GFA	Trip Rate	No. Days	Ave. GFA	Trip Rate	No. Days	Ave. GFA	Trip Rate
00:00 - 01:00									
01:00 - 02:00									
02:00 - 03:00									
03:00 - 04:00									
04:00 - 05:00									
05:00 - 06:00									
06:00 - 07:00									
07:00 - 08:00	2	595	2.773	2	595	0.420	2	595	3.193
08:00 - 09:00	2	595	2.857	2	595	2.437	2	595	5.294
09:00 - 10:00	2	595	1.008	2	595	0.924	2	595	1.932
10:00 - 11:00	2	595	0.084	2	595	0.084	2	595	0.168
11:00 - 12:00	2	595	0.168	2	595	0.168	2	595	0.336
12:00 - 13:00	2	595	0.420	2	595	0.588	2	595	1.008
13:00 - 14:00	2	595	0.420	2	595	0.420	2	595	0.840
14:00 - 15:00	2	595	0.420	2	595	0.420	2	595	0.840
15:00 - 16:00	2	595	0.420	2	595	0.336	2	595	0.756
16:00 - 17:00	2	595	0.756	2	595	0.840	2	595	1.596
17:00 - 18:00	2	595	2.437	2	595	4.034	2	595	6.471
18:00 - 19:00	2	595	0.084	2	595	1.176	2	595	1.260
19:00 - 20:00									
20:00 - 21:00									
21:00 - 22:00									
22:00 - 23:00									
23:00 - 24:00									
Total Rates:			11.847			11.847			23.694

This section displays the trip rate results based on the selected set of surveys and the selected count type (shown just above the table). It is split by three main columns, representing arrivals trips, departures trips, and total trips (arrivals plus departures). Within each of these main columns are three sub-columns. These display the number of survey days where count data is included (per time period), the average value of the selected trip rate calculation parameter (per time period), and the trip rate result (per time period). Total trip rates (the sum of the column) are also displayed at the foot of the table.

*To obtain a trip rate, the average (mean) trip rate parameter value (TRP) is first calculated for all selected survey days that have count data available for the stated time period. The average (mean) number of arrivals, departures or totals (whichever applies) is also calculated (COUNT) for all selected survey days that have count data available for the stated time period. Then, the average count is divided by the average trip rate parameter value, and multiplied by the stated calculation factor (shown just above the table and abbreviated here as FACT). So, the method is: COUNT/TRP*FACT. Trip rates are then rounded to 3 decimal places.*

The survey data, graphs and all associated supporting information, contained within the TRICS Database are published by TRICS Consortium Limited ("the Company") and the Company claims copyright and database rights in this published work. The Company authorises those who possess a current TRICS licence to access the TRICS Database and copy the data contained within the TRICS Database for the licence holders' use only. Any resulting copy must retain all copyrights and other proprietary notices, and any disclaimer contained thereon.

The Company accepts no responsibility for loss which may arise from reliance on data contained in the TRICS Database. [No warranty of any kind, express or implied, is made as to the data contained in the TRICS Database.]

Parameter summary

Trip rate parameter range selected:	340 - 850 (units: sqm)
Survey date date range:	01/01/16 - 02/05/23
Number of weekdays (Monday-Friday):	2
Number of Saturdays:	0
Number of Sundays:	0
Surveys automatically removed from selection:	0
Surveys manually removed from selection:	3

This section displays a quick summary of some of the data filtering selections made by the TRICS® user. The trip rate calculation parameter range of all selected surveys is displayed first, followed by the range of minimum and maximum survey dates selected by the user. Then, the total number of selected weekdays and weekend days in the selected set of surveys are show. Finally, the number of survey days that have been manually removed from the selected set outside of the standard filtering procedure are displayed.

Appendix D MODEL OUTPUT FILES

Junctions 9

PICADY 9 - Priority Intersection Module

Version: 9.5.1.7462
© Copyright TRL Limited, 2019

For sales and distribution information, program advice and maintenance, contact TRL:
+44 (0)1344 379777 software@trl.co.uk www.trlsoftware.co.uk

The users of this computer program for the solution of an engineering problem are in no way relieved of their responsibility for the correctness of the solution

Filename: Access Junction.j9
Path: C:\Users\wian.marais\Documents\Projects - Local\Z040 - Blackglen Road TIA\0104 - TTA
Report generation date: 18/12/2024 13:58:12

»2029 DS, AM
»2029 DS, PM
»2044 DS, AM
»2044 DS, PM

Summary of junction performance

	AM			PM		
	Set ID	Queue (PCU)	RFC	Set ID	Queue (PCU)	RFC
	2029 DS					
Stream B-AC	D1	0.2	0.16	D2	0.1	0.12
Stream C-AB		0.0	0.02		0.0	0.03
	2044 DS					
Stream B-AC	D3	0.2	0.16	D4	0.1	0.12
Stream C-AB		0.0	0.03		0.0	0.04

Values shown are the highest values encountered over all time segments. Delay is the maximum value of average delay per arriving vehicle.

File summary

File Description

Title	
Location	
Site number	
Date	07/06/2024
Version	
Status	(new file)
Identifier	
Client	
Jobnumber	
Enumerator	OCSC\wian.marais
Description	

Units

Distance units	Speed units	Traffic units input	Traffic units results	Flow units	Average delay units	Total delay units	Rate of delay units
m	kph	PCU	PCU	perHour	s	-Min	perMin

Analysis Options

Vehicle length (m)	Calculate Queue Percentiles	Calculate detailed queueing delay	Calculate residual capacity	RFC Threshold	Average Delay threshold (s)	Queue threshold (PCU)
5.75				0.85	36.00	20.00

Demand Set Summary

ID	Scenario name	Time Period name	Traffic profile type	Start time (HH:mm)	Finish time (HH:mm)	Time segment length (min)	Run automatically
D1	2029 DS	AM	ONE HOUR	00:00	01:30	15	✓
D2	2029 DS	PM	ONE HOUR	00:00	01:30	15	✓
D3	2044 DS	AM	ONE HOUR	00:00	01:30	15	✓
D4	2044 DS	PM	ONE HOUR	00:00	01:30	15	✓

Analysis Set Details

ID	Include in report	Network flow scaling factor (%)	Network capacity scaling factor (%)
A1	✓	100.000	100.000

2029 DS, AM

Data Errors and Warnings

No errors or warnings

Junction Network

Junctions

Junction	Name	Junction type	Major road direction	Use circulating lanes	Junction Delay (s)	Junction LOS
1	Blackglen LRD Access	T-Junction	Two-way		0.80	A

Junction Network Options

Driving side	Lighting
Left	Normal/unknown

Arms

Arms

Arm	Name	Description	Arm type
A	Blackglen Road E		Major
B	Development Access		Minor
C	Blackglen Road W		Major

Major Arm Geometry

Arm	Width of carriageway (m)	Has kerbed central reserve	Has right turn bay	Visibility for right turn (m)	Blocks?	Blocking queue (PCU)
C	6.50			200.0	✓	0.00

Geometries for Arm C are measured opposite Arm B. Geometries for Arm A (if relevant) are measured opposite Arm D.

Minor Arm Geometry

Arm	Minor arm type	Lane width (m)	Visibility to left (m)	Visibility to right (m)
B	One lane	3.00	90	125

Slope / Intercept / Capacity

Priority Intersection Slopes and Intercepts

Stream	Intercept (PCU/hr)	Slope for A-B	Slope for A-C	Slope for C-A	Slope for C-B
B-A	570	0.102	0.257	0.162	0.367
B-C	703	0.105	0.266	-	-
C-B	690	0.261	0.261	-	-

The slopes and intercepts shown above do NOT include any corrections or adjustments.

Streams may be combined, in which case capacity will be adjusted.

Values are shown for the first time segment only; they may differ for subsequent time segments.

Traffic Demand

Demand Set Details

ID	Scenario name	Time Period name	Traffic profile type	Start time (HH:mm)	Finish time (HH:mm)	Time segment length (min)	Run automatically
D1	2029 DS	AM	ONE HOUR	00:00	01:30	15	✓

Vehicle mix varies over turn	Vehicle mix varies over entry	Vehicle mix source	PCU Factor for a HV (PCU)
✓	✓	HV Percentages	2.00

Demand overview (Traffic)

Arm	Linked arm	Profile type	Use O-D data	Average Demand (PCU/hr)	Scaling Factor (%)
A		ONE HOUR	✓	308	100.000
B		ONE HOUR	✓	63	100.000
C		ONE HOUR	✓	480	100.000

Origin-Destination Data

Demand (PCU/hr)

		To		
		A	B	C
From	A	0	26	282
	B	45	0	17
	C	470	9	0

Vehicle Mix

Heavy Vehicle Percentages

		To		
		A	B	C
From	A	0	0	2
	B	0	0	0
	C	2	0	0

Results

Results Summary for whole modelled period

Stream	Max RFC	Max Delay (s)	Max Queue (PCU)	Max LOS	Average Demand (PCU/hr)	Total Junction Arrivals (PCU)
B-AC	0.16	9.63	0.2	A	58	87
C-AB	0.02	4.28	0.0	A	17	25
C-A					423	635
A-B					24	35
A-C					259	388

Main Results for each time segment

00:00 - 00:15

Stream	Total Demand (PCU/hr)	Junction Arrivals (PCU)	Capacity (PCU/hr)	RFC	Throughput (PCU/hr)	Start queue (PCU)	End queue (PCU)	Delay (s)	Unsignalised level of service
B-AC	47	12	494	0.096	47	0.0	0.1	8.040	A
C-AB	12	3	860	0.014	12	0.0	0.0	4.280	A
C-A	349	87			349				
A-B	19	5			19				
A-C	212	53			212				

00:15 - 00:30

Stream	Total Demand (PCU/hr)	Junction Arrivals (PCU)	Capacity (PCU/hr)	RFC	Throughput (PCU/hr)	Start queue (PCU)	End queue (PCU)	Delay (s)	Unsignalised level of service
B-AC	57	14	473	0.120	56	0.1	0.1	8.641	A
C-AB	16	4	895	0.018	16	0.0	0.0	4.128	A
C-A	415	104			415				
A-B	23	6			23				
A-C	253	63			253				

00:30 - 00:45

Stream	Total Demand (PCU/hr)	Junction Arrivals (PCU)	Capacity (PCU/hr)	RFC	Throughput (PCU/hr)	Start queue (PCU)	End queue (PCU)	Delay (s)	Unsignalised level of service
B-AC	69	17	443	0.156	69	0.1	0.2	9.616	A
C-AB	23	6	946	0.024	22	0.0	0.0	3.937	A
C-A	506	126			506				
A-B	28	7			28				
A-C	310	78			310				

00:45 - 01:00

Stream	Total Demand (PCU/hr)	Junction Arrivals (PCU)	Capacity (PCU/hr)	RFC	Throughput (PCU/hr)	Start queue (PCU)	End queue (PCU)	Delay (s)	Unsignalised level of service
B-AC	69	17	443	0.156	69	0.2	0.2	9.626	A
C-AB	23	6	946	0.024	23	0.0	0.0	3.939	A
C-A	506	126			506				
A-B	28	7			28				
A-C	310	78			310				

01:00 - 01:15

Stream	Total Demand (PCU/hr)	Junction Arrivals (PCU)	Capacity (PCU/hr)	RFC	Throughput (PCU/hr)	Start queue (PCU)	End queue (PCU)	Delay (s)	Unsignalised level of service
B-AC	57	14	473	0.120	57	0.2	0.1	8.652	A
C-AB	16	4	895	0.018	16	0.0	0.0	4.136	A
C-A	415	104			415				
A-B	23	6			23				
A-C	253	63			253				

01:15 - 01:30

Stream	Total Demand (PCU/hr)	Junction Arrivals (PCU)	Capacity (PCU/hr)	RFC	Throughput (PCU/hr)	Start queue (PCU)	End queue (PCU)	Delay (s)	Unsignalised level of service
B-AC	47	12	494	0.096	47	0.1	0.1	8.061	A
C-AB	12	3	860	0.014	12	0.0	0.0	4.284	A
C-A	349	87			349				
A-B	19	5			19				
A-C	212	53			212				

2029 DS, PM

Data Errors and Warnings

No errors or warnings

Junction Network

Junctions

Junction	Name	Junction type	Major road direction	Use circulating lanes	Junction Delay (s)	Junction LOS
1	Blackglen LRD Access	T-Junction	Two-way		0.67	A

Junction Network Options

Driving side	Lighting
Left	Normal/unknown

Traffic Demand

Demand Set Details

ID	Scenario name	Time Period name	Traffic profile type	Start time (HH:mm)	Finish time (HH:mm)	Time segment length (min)	Run automatically
D2	2029 DS	PM	ONE HOUR	00:00	01:30	15	✓

Vehicle mix varies over turn	Vehicle mix varies over entry	Vehicle mix source	PCU Factor for a HV (PCU)
✓	✓	HV Percentages	2.00

Demand overview (Traffic)

Arm	Linked arm	Profile type	Use O-D data	Average Demand (PCU/hr)	Scaling Factor (%)
A		ONE HOUR	✓	458	100.000
B		ONE HOUR	✓	46	100.000
C		ONE HOUR	✓	306	100.000

Origin-Destination Data

Demand (PCU/hr)

		To		
		A	B	C
From	A	0	42	416
	B	33	0	13
	C	292	14	0

Vehicle Mix

Heavy Vehicle Percentages

		To		
		A	B	C
From	A	0	0	2
	B	0	0	0
	C	1	0	0

Results

Results Summary for whole modelled period

Stream	Max RFC	Max Delay (s)	Max Queue (PCU)	Max LOS	Average Demand (PCU/hr)	Total Junction Arrivals (PCU)
B-AC	0.12	9.52	0.1	A	42	63
C-AB	0.03	4.94	0.0	A	21	31
C-A					260	391
A-B					38	57
A-C					382	573

Main Results for each time segment

00:00 - 00:15

Stream	Total Demand (PCU/hr)	Junction Arrivals (PCU)	Capacity (PCU/hr)	RFC	Throughput (PCU/hr)	Start queue (PCU)	End queue (PCU)	Delay (s)	Unsignalised level of service
B-AC	34	9	484	0.071	34	0.0	0.1	8.002	A
C-AB	15	4	746	0.020	15	0.0	0.0	4.938	A
C-A	215	54			215				
A-B	31	8			31				
A-C	313	78			313				

00:15 - 00:30

Stream	Total Demand (PCU/hr)	Junction Arrivals (PCU)	Capacity (PCU/hr)	RFC	Throughput (PCU/hr)	Start queue (PCU)	End queue (PCU)	Delay (s)	Unsignalised level of service
B-AC	41	10	461	0.089	41	0.1	0.1	8.579	A
C-AB	20	5	760	0.026	20	0.0	0.0	4.879	A
C-A	256	64			256				
A-B	37	9			37				
A-C	374	94			374				

00:30 - 00:45

Stream	Total Demand (PCU/hr)	Junction Arrivals (PCU)	Capacity (PCU/hr)	RFC	Throughput (PCU/hr)	Start queue (PCU)	End queue (PCU)	Delay (s)	Unsignalised level of service
B-AC	50	13	428	0.117	50	0.1	0.1	9.518	A
C-AB	27	7	780	0.034	27	0.0	0.0	4.798	A
C-A	310	78			310				
A-B	46	11			46				
A-C	458	115			458				

00:45 - 01:00

Stream	Total Demand (PCU/hr)	Junction Arrivals (PCU)	Capacity (PCU/hr)	RFC	Throughput (PCU/hr)	Start queue (PCU)	End queue (PCU)	Delay (s)	Unsignalised level of service
B-AC	50	13	428	0.118	50	0.1	0.1	9.524	A
C-AB	27	7	780	0.034	27	0.0	0.0	4.802	A
C-A	310	78			310				
A-B	46	11			46				
A-C	458	115			458				

01:00 - 01:15

Stream	Total Demand (PCU/hr)	Junction Arrivals (PCU)	Capacity (PCU/hr)	RFC	Throughput (PCU/hr)	Start queue (PCU)	End queue (PCU)	Delay (s)	Unsignalised level of service
B-AC	41	10	461	0.089	41	0.1	0.1	8.588	A
C-AB	20	5	760	0.026	20	0.0	0.0	4.885	A
C-A	256	64			256				
A-B	37	9			37				
A-C	374	94			374				

01:15 - 01:30

Stream	Total Demand (PCU/hr)	Junction Arrivals (PCU)	Capacity (PCU/hr)	RFC	Throughput (PCU/hr)	Start queue (PCU)	End queue (PCU)	Delay (s)	Unsignalised level of service
B-AC	34	9	484	0.071	34	0.1	0.1	8.017	A
C-AB	15	4	746	0.020	15	0.0	0.0	4.942	A
C-A	215	54			215				
A-B	31	8			31				
A-C	313	78			313				

2044 DS, AM

Data Errors and Warnings

No errors or warnings

Junction Network

Junctions

Junction	Name	Junction type	Major road direction	Use circulating lanes	Junction Delay (s)	Junction LOS
1	Blackglen LRD Access	T-Junction	Two-way		0.77	A

Junction Network Options

Driving side	Lighting
Left	Normal/unknown

Traffic Demand

Demand Set Details

ID	Scenario name	Time Period name	Traffic profile type	Start time (HH:mm)	Finish time (HH:mm)	Time segment length (min)	Run automatically
D3	2044 DS	AM	ONE HOUR	00:00	01:30	15	✓

Vehicle mix varies over turn	Vehicle mix varies over entry	Vehicle mix source	PCU Factor for a HV (PCU)
✓	✓	HV Percentages	2.00

Demand overview (Traffic)

Arm	Linked arm	Profile type	Use O-D data	Average Demand (PCU/hr)	Scaling Factor (%)
A		ONE HOUR	✓	334	100.000
B		ONE HOUR	✓	63	100.000
C		ONE HOUR	✓	526	100.000

Origin-Destination Data

Demand (PCU/hr)

		To		
		A	B	C
From	A	0	26	308
	B	45	0	17
	C	517	9	0

Vehicle Mix

Heavy Vehicle Percentages

		To		
		A	B	C
From	A	0	0	2
	B	0	0	0
	C	2	0	0

Results

Results Summary for whole modelled period

Stream	Max RFC	Max Delay (s)	Max Queue (PCU)	Max LOS	Average Demand (PCU/hr)	Total Junction Arrivals (PCU)
B-AC	0.16	10.03	0.2	B	58	87
C-AB	0.03	4.20	0.0	A	18	27
C-A					465	697
A-B					24	35
A-C					283	425

Main Results for each time segment

00:00 - 00:15

Stream	Total Demand (PCU/hr)	Junction Arrivals (PCU)	Capacity (PCU/hr)	RFC	Throughput (PCU/hr)	Start queue (PCU)	End queue (PCU)	Delay (s)	Unsignalised level of service
B-AC	47	12	484	0.098	47	0.0	0.1	8.228	A
C-AB	12	3	878	0.014	12	0.0	0.0	4.194	A
C-A	384	96			384				
A-B	19	5			19				
A-C	232	58			232				

00:15 - 00:30

Stream	Total Demand (PCU/hr)	Junction Arrivals (PCU)	Capacity (PCU/hr)	RFC	Throughput (PCU/hr)	Start queue (PCU)	End queue (PCU)	Delay (s)	Unsignalised level of service
B-AC	57	14	461	0.123	56	0.1	0.1	8.900	A
C-AB	17	4	918	0.018	17	0.0	0.0	4.031	A
C-A	456	114			456				
A-B	23	6			23				
A-C	277	69			277				

00:30 - 00:45

Stream	Total Demand (PCU/hr)	Junction Arrivals (PCU)	Capacity (PCU/hr)	RFC	Throughput (PCU/hr)	Start queue (PCU)	End queue (PCU)	Delay (s)	Unsignalised level of service
B-AC	69	17	428	0.162	69	0.1	0.2	10.019	B
C-AB	24	6	975	0.025	24	0.0	0.0	3.827	A
C-A	555	139			555				
A-B	28	7			28				
A-C	340	85			340				

00:45 - 01:00

Stream	Total Demand (PCU/hr)	Junction Arrivals (PCU)	Capacity (PCU/hr)	RFC	Throughput (PCU/hr)	Start queue (PCU)	End queue (PCU)	Delay (s)	Unsignalised level of service
B-AC	69	17	428	0.162	69	0.2	0.2	10.032	B
C-AB	25	6	975	0.025	25	0.0	0.0	3.830	A
C-A	555	139			555				
A-B	28	7			28				
A-C	340	85			340				

01:00 - 01:15

Stream	Total Demand (PCU/hr)	Junction Arrivals (PCU)	Capacity (PCU/hr)	RFC	Throughput (PCU/hr)	Start queue (PCU)	End queue (PCU)	Delay (s)	Unsignalised level of service
B-AC	57	14	461	0.123	57	0.2	0.1	8.916	A
C-AB	17	4	918	0.018	17	0.0	0.0	4.038	A
C-A	456	114			456				
A-B	23	6			23				
A-C	277	69			277				

01:15 - 01:30

Stream	Total Demand (PCU/hr)	Junction Arrivals (PCU)	Capacity (PCU/hr)	RFC	Throughput (PCU/hr)	Start queue (PCU)	End queue (PCU)	Delay (s)	Unsignalised level of service
B-AC	47	12	484	0.098	48	0.1	0.1	8.248	A
C-AB	13	3	878	0.014	13	0.0	0.0	4.197	A
C-A	384	96			384				
A-B	19	5			19				
A-C	232	58			232				

2044 DS, PM

Data Errors and Warnings

No errors or warnings

Junction Network

Junctions

Junction	Name	Junction type	Major road direction	Use circulating lanes	Junction Delay (s)	Junction LOS
1	Blackglen LRD Access	T-Junction	Two-way		0.65	A

Junction Network Options

Driving side	Lighting
Left	Normal/unknown

Traffic Demand

Demand Set Details

ID	Scenario name	Time Period name	Traffic profile type	Start time (HH:mm)	Finish time (HH:mm)	Time segment length (min)	Run automatically
D4	2044 DS	PM	ONE HOUR	00:00	01:30	15	✓

Vehicle mix varies over turn	Vehicle mix varies over entry	Vehicle mix source	PCU Factor for a HV (PCU)
✓	✓	HV Percentages	2.00

Demand overview (Traffic)

Arm	Linked arm	Profile type	Use O-D data	Average Demand (PCU/hr)	Scaling Factor (%)
A		ONE HOUR	✓	499	100.000
B		ONE HOUR	✓	46	100.000
C		ONE HOUR	✓	334	100.000

Origin-Destination Data

Demand (PCU/hr)

		To		
		A	B	C
From	A	0	42	457
	B	33	0	13
	C	320	14	0

Vehicle Mix

Heavy Vehicle Percentages

		To		
		A	B	C
From	A	0	0	2
	B	0	0	0
	C	1	0	0

Results

Results Summary for whole modelled period

Stream	Max RFC	Max Delay (s)	Max Queue (PCU)	Max LOS	Average Demand (PCU/hr)	Total Junction Arrivals (PCU)
B-AC	0.12	9.95	0.1	A	42	63
C-AB	0.04	4.90	0.0	A	22	32
C-A					285	428
A-B					38	57
A-C					419	629

Main Results for each time segment

00:00 - 00:15

Stream	Total Demand (PCU/hr)	Junction Arrivals (PCU)	Capacity (PCU/hr)	RFC	Throughput (PCU/hr)	Start queue (PCU)	End queue (PCU)	Delay (s)	Unsignalised level of service
B-AC	34	9	473	0.073	34	0.0	0.1	8.200	A
C-AB	16	4	753	0.021	16	0.0	0.0	4.895	A
C-A	236	59			236				
A-B	31	8			31				
A-C	344	86			344				

00:15 - 00:30

Stream	Total Demand (PCU/hr)	Junction Arrivals (PCU)	Capacity (PCU/hr)	RFC	Throughput (PCU/hr)	Start queue (PCU)	End queue (PCU)	Delay (s)	Unsignalised level of service
B-AC	41	10	447	0.092	41	0.1	0.1	8.856	A
C-AB	21	5	769	0.027	20	0.0	0.0	4.826	A
C-A	280	70			280				
A-B	37	9			37				
A-C	411	103			411				

00:30 - 00:45

Stream	Total Demand (PCU/hr)	Junction Arrivals (PCU)	Capacity (PCU/hr)	RFC	Throughput (PCU/hr)	Start queue (PCU)	End queue (PCU)	Delay (s)	Unsignalised level of service
B-AC	50	13	412	0.122	50	0.1	0.1	9.943	A
C-AB	28	7	792	0.036	28	0.0	0.0	4.734	A
C-A	340	85			340				
A-B	46	11			46				
A-C	503	126			503				

00:45 - 01:00

Stream	Total Demand (PCU/hr)	Junction Arrivals (PCU)	Capacity (PCU/hr)	RFC	Throughput (PCU/hr)	Start queue (PCU)	End queue (PCU)	Delay (s)	Unsignalised level of service
B-AC	50	13	412	0.122	50	0.1	0.1	9.951	A
C-AB	28	7	792	0.036	28	0.0	0.0	4.738	A
C-A	340	85			340				
A-B	46	11			46				
A-C	503	126			503				

01:00 - 01:15

Stream	Total Demand (PCU/hr)	Junction Arrivals (PCU)	Capacity (PCU/hr)	RFC	Throughput (PCU/hr)	Start queue (PCU)	End queue (PCU)	Delay (s)	Unsignalised level of service
B-AC	41	10	447	0.092	41	0.1	0.1	8.868	A
C-AB	21	5	769	0.027	21	0.0	0.0	4.833	A
C-A	280	70			280				
A-B	37	9			37				
A-C	411	103			411				

01:15 - 01:30

Stream	Total Demand (PCU/hr)	Junction Arrivals (PCU)	Capacity (PCU/hr)	RFC	Throughput (PCU/hr)	Start queue (PCU)	End queue (PCU)	Delay (s)	Unsignalised level of service
B-AC	34	9	473	0.073	35	0.1	0.1	8.217	A
C-AB	16	4	753	0.021	16	0.0	0.0	4.899	A
C-A	236	59			236				
A-B	31	8			31				
A-C	344	86			344				

TRANSYT 15

Version: 15.5.2.7994
© Copyright TRL Limited, 2018

For sales and distribution information, program advice and maintenance, contact TRL:
+44 (0)1344 379777 software@trl.co.uk www.trlsoftware.co.uk

The users of this computer program for the solution of an engineering problem are in no way relieved of their responsibility for the correctness of the solution

Filename: Ped Crossing.t15
Path: C:\Users\wian.marais\Documents\Projects - Local\Z040 - Blackglen Road TIA\0104 - TTA
Report generation date: 18/12/2024 14:00:31

»A1 - 2029 AM DS : D1 - 2027 AM DS* :
»A2 - 2029 PM DS : D2 - 2027 PM DS* :
»A3 - 2044 AM DS : D3 - 2042 AM DS* :
»A4 - 2044 PM DS : D4 - 2042 PM DS* :

File summary

File description

File title	Blackglen Ped Crossing
Location	
Site number	
UTCRegion	
Driving side	Left
Date	13/06/2018
Version	
Status	(new file)
Identifier	
Client	
Jobnumber	
Enumerator	TRLLIMITED\jbinning
Description	

Model and Results

Enable controller offsets	Enable fuel consumption	Enable quick flares	Display journey time results	Display level of service results	Display blocking and starvation results	Display end of red and green queue results	Display excess queue results	Display separate uniform and random results	Display unweighted results	Display TRANSYT 12 style timings	Display effective greens in results	Display Red-With-Amber	Display End-Of-Green Amber

Units

Cost units	Speed units	Distance units	Fuel economy units	Fuel rate units	Mass units	Traffic units input	Traffic units results	Flow units	Average delay units	Total delay units	Rate of delay units
£	kph	m	mpg	l/h	kg	PCU	PCU	perHour	s	-Hour	perHour

Sorting

Show names instead of IDs	Sorting direction	Sorting type	Ignore prefixes when sorting	Analysis/demand set sorting	Link grouping	Source grouping	Colour Analysis/Demand Sets
	Ascending	Numerical		ID	Normal	Normal	✓

Network Diagrams

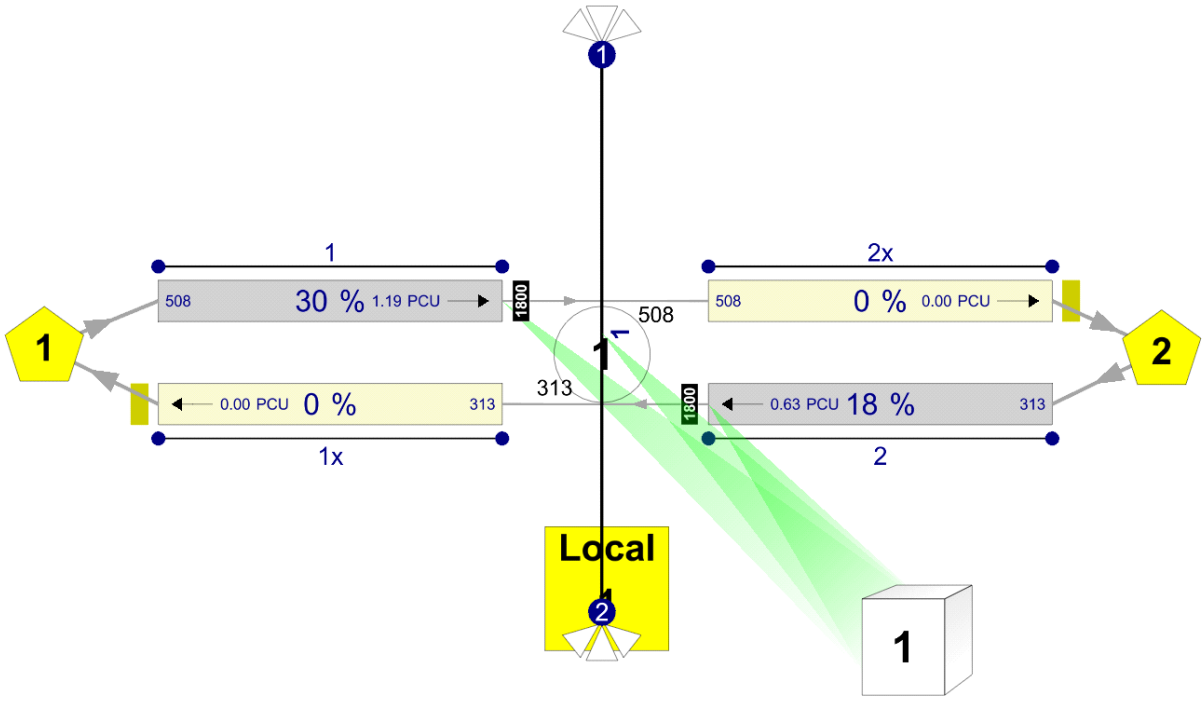

Blackglen Ped Crossing
Cycletime 0s / 100s , Timesteps 99 / 100
3, 3
Diagram produced using TRANSYT 15.5.2.7994

A1 - 2029 AM DS
D1 - 2027 AM DS*

Summary

Data Errors and Warnings

No errors or warnings

Run Summary

Analysis set used	Run start time	Run finish time	Modelling start time (HH:mm)	Network Cycle Time (s)	Performance Index (£ per hr)	Total network delay (PCU-hr/hr)	Highest DOS (%)	Item with highest DOS	Number of oversaturated items	Percentage of oversaturated items (%)	Item with worst signalised PRC	Item with worst unsignalised PRC	Ite wit wor over PR
1	18/12/2024 14:00:24	18/12/2024 14:00:24	08:00	100	2.14	0.11	26.83	1/1	0	0	1/1	2x/1	1/

Analysis Set Details

Name	Description	Demand set	Include in report	Locked
2029 AM DS		D1	✓	

Demand Set Details

Name	Description	Composite	Demand sets	Start time (HH:mm)	Locked
2027 AM DS				08:00	

Network Options

Network timings

Network cycle time (s)	Restrict to SCOOT cycle times	Time segment length (min)	Number of time segments	Modelled time period (min)
100		60	1	60

Signals options

Start displacement (s)	End displacement (s)
2	3

Advanced

Phase minimum broken penalty (£)	Phase maximum broken penalty (£)	Intergreen broken penalty (£)	Starting Red-with-Amber (s)
10000.00	10000.00	10000.00	2

Traffic options

Traffic model	Vehicle flow scaling factor (%)	Pedestrian flow scaling factor (%)	Cruise times or speeds
Platoon Dispersion (PDM)	100	100	Cruise Speeds

Advanced

Resolution	DOS Threshold (%)	Cruise scaling factor (%)	Use link stop weightings	Use link delay weightings	Exclude pedestrians from results calculation	Random delay mode	Type of Vehicle-in-Service	Type of random parameter	PCU Length (m)	Calculate results for Path Segments	Generate PDM Profile Data
1	90	100	✓	✓		Complex	Uniform (TRANSYT)	Uniform (TRANSYT)	5.75		✓

Normal Traffic parameters

Dispersion type	Dispersion coefficient	Travel time coefficient
Default	35	80

Normal Traffic Types

Name	PCU Factor
Normal	1.00

Bus parameters

Name	PCU Factor	Dispersion type	Acceleration (ms^[-2])	Stationary time coefficient	Cruise time coefficient
Bus	1.00	Default	0.94	30	85

Tram parameters

Name	PCU Factor	Dispersion type	Acceleration (ms^[-2])	Stationary time coefficient	Cruise time coefficient
Tram	1.00	Default	0.94	100	100

Pedestrian parameters

Dispersion type
Default

Optimisation options

Enable optimisation	Auto redistribute	Optimisation level	Enable OUT Profile accuracy
✓	✓	Offsets And Green Splits	✓

Advanced

Optimisation type	Hill climb increments	OUTProfile accuracy	Use enhanced optimisation	Auto optimisation order	Optimisation order	Master controller	Offsets relative to master controller	Master controller offset after each run
Hill Climb (Fast)	15, 40, -1, 15, 40, 1, -1, 1	50, 50, 5, 5, 0.5, 0.5, 0.05, 0.05		✓	1			Do nothing

Economics

Vehicle Monetary Value Of Delay (£ per PCU-hr)	Vehicle Monetary Value Of Stops (£ per 100 stops)	Pedestrian monetary value of delay (£ per Ped-hr)
14.20	2.60	14.20

Signal Timings

Network Default: 100s cycle time; 100 steps

Controller Stream 1

Controller Stream	Name	Description	Use sequence	Cycle time source	Cycle time (s)
1	(untitled)		1	NetworkDefault	100

Controller Stream 1 - Properties

Controller Stream	Manufacturer name	Type	Model number	(Telephone) Line Number	Site number	Grid reference	Gaining delay type
1	Unspecified						Absolute

Controller Stream 1 - Optimisation

Controller Stream	Allow offset optimisation	Allow green split optimisation	Optimisation level	Auto redistribute	Enable stage constraint
1	✓	✓	Offsets And Green Splits	✓	

Intergreen Matrix for Controller Stream 1

		To	
		A	B
From	A		
	B		

Resultant Stages

Controller Stream	Resultant Stage	Is base stage	Library Stage ID	Phases in this stage	Stage start (s)	Stage end (s)	Stage duration (s)	User stage minimum (s)	Stage minimum (s)
1	1	✓	1	A	57	50	93	1	7
	2	✓	2	B	50	57	7	1	7

Traffic Stream Green Times

Arm	Traffic Stream	Traffic Node	Controller Stream	Phase	Green Period 1		
					Start	End	Duration
1	1	1	1	A	57	50	93
2	1	1	1	A	57	50	93

Final Prediction Table

Traffic Stream Results

				SIGNALS		FLOWS		PERFORMANCE				PER PCU			QUEUES	
Arm	Traffic Stream	Name	Traffic node	Controller stream	Phase	Calculated flow entering (PCU/hr)	Calculated sat flow (PCU/hr)	Actual green (s (per cycle))	Wasted time total (s (per cycle))	Degree of saturation (%)	Practical reserve capacity (%)	JourneyTime (s)	Mean Delay per Veh (s)	Mean stops per Veh (%)	Mean max queue (PCU)	D wei mu
1	1		1	1	A	454	1800	93	0.00	27	235	15.63	0.63	6.08	1.06	
1x	1					280	Unrestricted	100	0.00	0	Unrestricted	24.00	0.00	0.00	0.00	
2	1		1	1	A	280	1800	93	0.00	17	444	15.43	0.43	5.36	0.56	
2x	1					454	Unrestricted	100	0.00	0	Unrestricted	24.00	0.00	0.00	0.00	

Network Results

	Distance travelled (PCU-km/hr)	Time spent (PCU-hr/hr)	Mean journey speed (kph)	Total delay (PCU-hr/hr)	Weighted cost of delay (£ per hr)	Weighted cost of stops (£ per hr)	Excess queue penalty (£ per hr)	Performance Index (£ per hr)
Normal traffic	238.55	8.06	29.58	0.11	1.60	0.53	0.00	2.14
Bus	0.00	0.00	0.00	0.00	0.00	0.00	0.00	0.00
Tram	0.00	0.00	0.00	0.00	0.00	0.00	0.00	0.00
Pedestrians	0.00	0.00	0.00	0.00	0.00	0.00	0.00	0.00
TOTAL	238.55	8.06	29.58	0.11	1.60	0.53	0.00	2.14

- *< = adjusted flow warning (upstream links/traffic streams are over-saturated)*
- ** = Traffic Stream - Normal, Bus or Tram Stop or Delay weighting has been set to a value other than 100%*
- *^ = Traffic Stream - Normal, Bus or Tram Stop or Delay Path weighting has been set to a value other than 100%*
- *+ = average link/traffic stream excess queue is greater than 0*
- ***P.I. = PERFORMANCE INDEX***

A2 - 2029 PM DS
D2 - 2027 PM DS*

Summary

Data Errors and Warnings

No errors or warnings

Run Summary

Analysis set used	Run start time	Run finish time	Modelling start time (HH:mm)	Network Cycle Time (s)	Performance Index (£ per hr)	Total network delay (PCU-hr/hr)	Highest DOS (%)	Item with highest DOS	Number of oversaturated items	Percentage of oversaturated items (%)	Item with worst signalised PRC	Item with worst unsignalised PRC	Ite wit wor over PR
2	18/12/2024 14:00:24	18/12/2024 14:00:24	17:00	100	1.85	0.10	23.17	2/1	0	0	2/1	2x/1	2/

Analysis Set Details

Name	Description	Demand set	Include in report	Locked
2029 PM DS		D2	✓	

Demand Set Details

Name	Description	Composite	Demand sets	Start time (HH:mm)	Locked
2027 PM DS				17:00	

Network Options

Network timings

Network cycle time (s)	Restrict to SCOOT cycle times	Time segment length (min)	Number of time segments	Modelled time period (min)
100		60	1	60

Signals options

Start displacement (s)	End displacement (s)
2	3

Advanced

Phase minimum broken penalty (£)	Phase maximum broken penalty (£)	Intergreen broken penalty (£)	Starting Red-with-Amber (s)
10000.00	10000.00	10000.00	2

Traffic options

Traffic model	Vehicle flow scaling factor (%)	Pedestrian flow scaling factor (%)	Cruise times or speeds
Platoon Dispersion (PDM)	100	100	Cruise Speeds

Advanced

Resolution	DOS Threshold (%)	Cruise scaling factor (%)	Use link stop weightings	Use link delay weightings	Exclude pedestrians from results calculation	Random delay mode	Type of Vehicle-in-Service	Type of random parameter	PCU Length (m)	Calculate results for Path Segments	Generate PDM Profile Data
1	90	100	✓	✓		Complex	Uniform (TRANSYT)	Uniform (TRANSYT)	5.75		✓

Normal Traffic parameters

Dispersion type	Dispersion coefficient	Travel time coefficient
Default	35	80

Normal Traffic Types

Name	PCU Factor
Normal	1.00

Bus parameters

Name	PCU Factor	Dispersion type	Acceleration (ms^[-2])	Stationary time coefficient	Cruise time coefficient
Bus	1.00	Default	0.94	30	85

Tram parameters

Name	PCU Factor	Dispersion type	Acceleration (ms^[-2])	Stationary time coefficient	Cruise time coefficient
Tram	1.00	Default	0.94	100	100

Pedestrian parameters

Dispersion type
Default

Optimisation options

Enable optimisation	Auto redistribute	Optimisation level	Enable OUT Profile accuracy
✓	✓	Offsets And Green Splits	✓

Advanced

Optimisation type	Hill climb increments	OUTProfile accuracy	Use enhanced optimisation	Auto optimisation order	Optimisation order	Master controller	Offsets relative to master controller	Master controller offset after each run
Hill Climb (Fast)	15, 40, -1, 15, 40, 1, -1, 1	50, 50, 5, 5, 0.5, 0.5, 0.05, 0.05		✓	1			Do nothing

Economics

Vehicle Monetary Value Of Delay (£ per PCU-hr)	Vehicle Monetary Value Of Stops (£ per 100 stops)	Pedestrian monetary value of delay (£ per Ped-hr)
14.20	2.60	14.20

Signal Timings

Network Default: 100s cycle time; 100 steps

Controller Stream 1

Controller Stream	Name	Description	Use sequence	Cycle time source	Cycle time (s)
1	(untitled)		1	NetworkDefault	100

Controller Stream 1 - Properties

Controller Stream	Manufacturer name	Type	Model number	(Telephone) Line Number	Site number	Grid reference	Gaining delay type
1	Unspecified						Absolute

Controller Stream 1 - Optimisation

Controller Stream	Allow offset optimisation	Allow green split optimisation	Optimisation level	Auto redistribute	Enable stage constraint
1	✓	✓	Offsets And Green Splits	✓	

Intergreen Matrix for Controller Stream 1

		To	
		A	B
From	A		
	B		

Resultant Stages

Controller Stream	Resultant Stage	Is base stage	Library Stage ID	Phases in this stage	Stage start (s)	Stage end (s)	Stage duration (s)	User stage minimum (s)	Stage minimum (s)
1	1	✓	1	A	57	50	93	1	7
	2	✓	2	B	50	57	7	1	7

Traffic Stream Green Times

Arm	Traffic Stream	Traffic Node	Controller Stream	Phase	Green Period 1		
					Start	End	Duration
1	1	1	1	A	57	50	93
2	1	1	1	A	57	50	93

Final Prediction Table

Traffic Stream Results

				SIGNALS		FLOWS		PERFORMANCE				PER PCU			QUEUES	
Arm	Traffic Stream	Name	Traffic node	Controller stream	Phase	Calculated flow entering (PCU/hr)	Calculated sat flow (PCU/hr)	Actual green (s (per cycle))	Wasted time total (s (per cycle))	Degree of saturation (%)	Practical reserve capacity (%)	JourneyTime (s)	Mean Delay per Veh (s)	Mean stops per Veh (%)	Mean max queue (PCU)	D wei mu
1	1		1	1	A	289	1800	93	0.00	17	427	15.44	0.44	5.48	0.58	
1x	1					392	Unrestricted	100	0.00	0	Unrestricted	24.00	0.00	0.00	0.00	
2	1		1	1	A	392	1800	93	0.00	23	288	15.55	0.55	5.91	0.80	
2x	1					289	Unrestricted	100	0.00	0	Unrestricted	24.00	0.00	0.00	0.00	

Network Results

	Distance travelled (PCU-km/hr)	Time spent (PCU-hr/hr)	Mean journey speed (kph)	Total delay (PCU-hr/hr)	Weighted cost of delay (£ per hr)	Weighted cost of stops (£ per hr)	Excess queue penalty (£ per hr)	Performance Index (£ per hr)
Normal traffic	221.33	7.47	29.62	0.10	1.36	0.49	0.00	1.85
Bus	0.00	0.00	0.00	0.00	0.00	0.00	0.00	0.00
Tram	0.00	0.00	0.00	0.00	0.00	0.00	0.00	0.00
Pedestrians	0.00	0.00	0.00	0.00	0.00	0.00	0.00	0.00
TOTAL	221.33	7.47	29.62	0.10	1.36	0.49	0.00	1.85

- *< = adjusted flow warning (upstream links/traffic streams are over-saturated)*
- ** = Traffic Stream - Normal, Bus or Tram Stop or Delay weighting has been set to a value other than 100%*
- *^ = Traffic Stream - Normal, Bus or Tram Stop or Delay Path weighting has been set to a value other than 100%*
- *+ = average link/traffic stream excess queue is greater than 0*
- ***P.I. = PERFORMANCE INDEX***

A3 - 2044 AM DS
D3 - 2042 AM DS*

Summary

Data Errors and Warnings

No errors or warnings

Run Summary

Analysis set used	Run start time	Run finish time	Modelling start time (HH:mm)	Network Cycle Time (s)	Performance Index (£ per hr)	Total network delay (PCU-hr/hr)	Highest DOS (%)	Item with highest DOS	Number of oversaturated items	Percentage of oversaturated items (%)	Item with worst signalised PRC	Item with worst unsignalised PRC	Ite wit wor over PR
3	18/12/2024 14:00:24	18/12/2024 14:00:24	08:00	100	2.64	0.14	30.02	1/1	0	0	1/1	2x/1	1/

Analysis Set Details

Name	Description	Demand set	Include in report	Locked
2044 AM DS		D3	✓	

Demand Set Details

Name	Description	Composite	Demand sets	Start time (HH:mm)	Locked
2042 AM DS				08:00	

Network Options

Network timings

Network cycle time (s)	Restrict to SCOOT cycle times	Time segment length (min)	Number of time segments	Modelled time period (min)
100		60	1	60

Signals options

Start displacement (s)	End displacement (s)
2	3

Advanced

Phase minimum broken penalty (£)	Phase maximum broken penalty (£)	Intergreen broken penalty (£)	Starting Red-with-Amber (s)
10000.00	10000.00	10000.00	2

Traffic options

Traffic model	Vehicle flow scaling factor (%)	Pedestrian flow scaling factor (%)	Cruise times or speeds
Platoon Dispersion (PDM)	100	100	Cruise Speeds

Advanced

Resolution	DOS Threshold (%)	Cruise scaling factor (%)	Use link stop weightings	Use link delay weightings	Exclude pedestrians from results calculation	Random delay mode	Type of Vehicle-in-Service	Type of random parameter	PCU Length (m)	Calculate results for Path Segments	Generate PDM Profile Data
1	90	100	✓	✓		Complex	Uniform (TRANSYT)	Uniform (TRANSYT)	5.75		✓

Normal Traffic parameters

Dispersion type	Dispersion coefficient	Travel time coefficient
Default	35	80

Normal Traffic Types

Name	PCU Factor
Normal	1.00

Bus parameters

Name	PCU Factor	Dispersion type	Acceleration (ms^[-2])	Stationary time coefficient	Cruise time coefficient
Bus	1.00	Default	0.94	30	85

Tram parameters

Name	PCU Factor	Dispersion type	Acceleration (ms^[-2])	Stationary time coefficient	Cruise time coefficient
Tram	1.00	Default	0.94	100	100

Pedestrian parameters

Dispersion type
Default

Optimisation options

Enable optimisation	Auto redistribute	Optimisation level	Enable OUT Profile accuracy
✓	✓	Offsets And Green Splits	✓

Advanced

Optimisation type	Hill climb increments	OUTProfile accuracy	Use enhanced optimisation	Auto optimisation order	Optimisation order	Master controller	Offsets relative to master controller	Master controller offset after each run
Hill Climb (Fast)	15, 40, -1, 15, 40, 1, -1, 1	50, 50, 5, 5, 0.5, 0.5, 0.05, 0.05		✓	1			Do nothing

Economics

Vehicle Monetary Value Of Delay (£ per PCU-hr)	Vehicle Monetary Value Of Stops (£ per 100 stops)	Pedestrian monetary value of delay (£ per Ped-hr)
14.20	2.60	14.20

Signal Timings

Network Default: 100s cycle time; 100 steps

Controller Stream 1

Controller Stream	Name	Description	Use sequence	Cycle time source	Cycle time (s)
1	(untitled)		1	NetworkDefault	100

Controller Stream 1 - Properties

Controller Stream	Manufacturer name	Type	Model number	(Telephone) Line Number	Site number	Grid reference	Gaining delay type
1	Unspecified						Absolute

Controller Stream 1 - Optimisation

Controller Stream	Allow offset optimisation	Allow green split optimisation	Optimisation level	Auto redistribute	Enable stage constraint
1	✓	✓	Offsets And Green Splits	✓	

Intergreen Matrix for Controller Stream 1

		To	
		A	B
From	A		
	B		

Resultant Stages

Controller Stream	Resultant Stage	Is base stage	Library Stage ID	Phases in this stage	Stage start (s)	Stage end (s)	Stage duration (s)	User stage minimum (s)	Stage minimum (s)
1	1	✓	1	A	57	50	93	1	7
	2	✓	2	B	50	57	7	1	7

Traffic Stream Green Times

Arm	Traffic Stream	Traffic Node	Controller Stream	Phase	Green Period 1		
					Start	End	Duration
1	1	1	1	A	57	50	93
2	1	1	1	A	57	50	93

Final Prediction Table

Traffic Stream Results

				SIGNALS		FLOWS		PERFORMANCE				PER PCU			QUEUES	
Arm	Traffic Stream	Name	Traffic node	Controller stream	Phase	Calculated flow entering (PCU/hr)	Calculated sat flow (PCU/hr)	Actual green (s (per cycle))	Wasted time total (s (per cycle))	Degree of saturation (%)	Practical reserve capacity (%)	JourneyTime (s)	Mean Delay per Veh (s)	Mean stops per Veh (%)	Mean max queue (PCU)	D wei mu
1	1		1	1	A	508	1800	93	0.00	30	200	15.71	0.71	6.64	1.19	
1x	1					313	Unrestricted	100	0.00	0	Unrestricted	24.00	0.00	0.00	0.00	
2	1		1	1	A	313	1800	93	0.00	18	387	15.46	0.46	5.67	0.63	
2x	1					508	Unrestricted	100	0.00	0	Unrestricted	24.00	0.00	0.00	0.00	

Network Results

	Distance travelled (PCU-km/hr)	Time spent (PCU-hr/hr)	Mean journey speed (kph)	Total delay (PCU-hr/hr)	Weighted cost of delay (£ per hr)	Weighted cost of stops (£ per hr)	Excess queue penalty (£ per hr)	Performance Index (£ per hr)
Normal traffic	266.83	9.03	29.53	0.14	2.00	0.65	0.00	2.64
Bus	0.00	0.00	0.00	0.00	0.00	0.00	0.00	0.00
Tram	0.00	0.00	0.00	0.00	0.00	0.00	0.00	0.00
Pedestrians	0.00	0.00	0.00	0.00	0.00	0.00	0.00	0.00
TOTAL	266.83	9.03	29.53	0.14	2.00	0.65	0.00	2.64

- *< = adjusted flow warning (upstream links/traffic streams are over-saturated)*
- ** = Traffic Stream - Normal, Bus or Tram Stop or Delay weighting has been set to a value other than 100%*
- *^ = Traffic Stream - Normal, Bus or Tram Stop or Delay Path weighting has been set to a value other than 100%*
- *+ = average link/traffic stream excess queue is greater than 0*
- ***P.I. = PERFORMANCE INDEX***

A4 - 2044 PM DS
D4 - 2042 PM DS*

Summary

Data Errors and Warnings

No errors or warnings

Run Summary

Analysis set used	Run start time	Run finish time	Modelling start time (HH:mm)	Network Cycle Time (s)	Performance Index (£ per hr)	Total network delay (PCU-hr/hr)	Highest DOS (%)	Item with highest DOS	Number of oversaturated items	Percentage of oversaturated items (%)	Item with worst signalised PRC	Item with worst unsignalised PRC	Ite wit wor over PR
4	18/12/2024 14:00:24	18/12/2024 14:00:24	17:00	100	2.24	0.12	26.18	2/1	0	0	2/1	2x/1	2/

Analysis Set Details

Name	Description	Demand set	Include in report	Locked
2044 PM DS		D4	✓	

Demand Set Details

Name	Description	Composite	Demand sets	Start time (HH:mm)	Locked
2042 PM DS				17:00	

Network Options

Network timings

Network cycle time (s)	Restrict to SCOOT cycle times	Time segment length (min)	Number of time segments	Modelled time period (min)
100		60	1	60

Signals options

Start displacement (s)	End displacement (s)
2	3

Advanced

Phase minimum broken penalty (£)	Phase maximum broken penalty (£)	Intergreen broken penalty (£)	Starting Red-with-Amber (s)
10000.00	10000.00	10000.00	2

Traffic options

Traffic model	Vehicle flow scaling factor (%)	Pedestrian flow scaling factor (%)	Cruise times or speeds
Platoon Dispersion (PDM)	100	100	Cruise Speeds

Advanced

Resolution	DOS Threshold (%)	Cruise scaling factor (%)	Use link stop weightings	Use link delay weightings	Exclude pedestrians from results calculation	Random delay mode	Type of Vehicle-in-Service	Type of random parameter	PCU Length (m)	Calculate results for Path Segments	Generate PDM Profile Data
1	90	100	✓	✓		Complex	Uniform (TRANSYT)	Uniform (TRANSYT)	5.75		✓

Normal Traffic parameters

Dispersion type	Dispersion coefficient	Travel time coefficient
Default	35	80

Normal Traffic Types

Name	PCU Factor
Normal	1.00

Bus parameters

Name	PCU Factor	Dispersion type	Acceleration (ms^[-2])	Stationary time coefficient	Cruise time coefficient
Bus	1.00	Default	0.94	30	85

Tram parameters

Name	PCU Factor	Dispersion type	Acceleration (ms^[-2])	Stationary time coefficient	Cruise time coefficient
Tram	1.00	Default	0.94	100	100

Pedestrian parameters

Dispersion type
Default

Optimisation options

Enable optimisation	Auto redistribute	Optimisation level	Enable OUT Profile accuracy
✓	✓	Offsets And Green Splits	✓

Advanced

Optimisation type	Hill climb increments	OUTProfile accuracy	Use enhanced optimisation	Auto optimisation order	Optimisation order	Master controller	Offsets relative to master controller	Master controller offset after each run
Hill Climb (Fast)	15, 40, -1, 15, 40, 1, -1, 1	50, 50, 5, 5, 0.5, 0.5, 0.05, 0.05		✓	1			Do nothing

Economics

Vehicle Monetary Value Of Delay (£ per PCU-hr)	Vehicle Monetary Value Of Stops (£ per 100 stops)	Pedestrian monetary value of delay (£ per Ped-hr)
14.20	2.60	14.20

Signal Timings

Network Default: 100s cycle time; 100 steps

Controller Stream 1

Controller Stream	Name	Description	Use sequence	Cycle time source	Cycle time (s)
1	(untitled)		1	NetworkDefault	100

Controller Stream 1 - Properties

Controller Stream	Manufacturer name	Type	Model number	(Telephone) Line Number	Site number	Grid reference	Gaining delay type
1	Unspecified						Absolute

Controller Stream 1 - Optimisation

Controller Stream	Allow offset optimisation	Allow green split optimisation	Optimisation level	Auto redistribute	Enable stage constraint
1	✓	✓	Offsets And Green Splits	✓	

Intergreen Matrix for Controller Stream 1

		To	
		A	B
From	A		
	B		

Resultant Stages

Controller Stream	Resultant Stage	Is base stage	Library Stage ID	Phases in this stage	Stage start (s)	Stage end (s)	Stage duration (s)	User stage minimum (s)	Stage minimum (s)
1	1	✓	1	A	57	50	93	1	7
	2	✓	2	B	50	57	7	1	7

Traffic Stream Green Times

Arm	Traffic Stream	Traffic Node	Controller Stream	Phase	Green Period 1		
					Start	End	Duration
1	1	1	1	A	57	50	93
2	1	1	1	A	57	50	93

Final Prediction Table

Traffic Stream Results

				SIGNALS		FLOWS		PERFORMANCE				PER PCU			QUEUES	
Arm	Traffic Stream	Name	Traffic node	Controller stream	Phase	Calculated flow entering (PCU/hr)	Calculated sat flow (PCU/hr)	Actual green (s (per cycle))	Wasted time total (s (per cycle))	Degree of saturation (%)	Practical reserve capacity (%)	JourneyTime (s)	Mean Delay per Veh (s)	Mean stops per Veh (%)	Mean max queue (PCU)	D wei mu
1	1		1	1	A	322	1800	93	0.00	19	373	15.47	0.47	5.71	0.65	
1x	1					443	Unrestricted	100	0.00	0	Unrestricted	24.00	0.00	0.00	0.00	
2	1		1	1	A	443	1800	93	0.00	26	244	15.62	0.62	6.02	0.91	
2x	1					322	Unrestricted	100	0.00	0	Unrestricted	24.00	0.00	0.00	0.00	

Network Results

	Distance travelled (PCU-km/hr)	Time spent (PCU-hr/hr)	Mean journey speed (kph)	Total delay (PCU-hr/hr)	Weighted cost of delay (£ per hr)	Weighted cost of stops (£ per hr)	Excess queue penalty (£ per hr)	Performance Index (£ per hr)
Normal traffic	248.63	8.41	29.58	0.12	1.68	0.56	0.00	2.24
Bus	0.00	0.00	0.00	0.00	0.00	0.00	0.00	0.00
Tram	0.00	0.00	0.00	0.00	0.00	0.00	0.00	0.00
Pedestrians	0.00	0.00	0.00	0.00	0.00	0.00	0.00	0.00
TOTAL	248.63	8.41	29.58	0.12	1.68	0.56	0.00	2.24

- *< = adjusted flow warning (upstream links/traffic streams are over-saturated)*
- ** = Traffic Stream - Normal, Bus or Tram Stop or Delay weighting has been set to a value other than 100%*
- *^ = Traffic Stream - Normal, Bus or Tram Stop or Delay Path weighting has been set to a value other than 100%*
- *+ = average link/traffic stream excess queue is greater than 0*
- ***P.I. = PERFORMANCE INDEX***

OCSC

O'CONNOR · SUTTON · CRONIN

MULTIDISCIPLINARY CONSULTING ENGINEERS

Head Office

9 Prussia Street
Dublin 7
Ireland
D07KT57
T: +353 (0)1 8682000
E: ocsc@ocsc.ie | W: www.ocsc.ie

Civil | Structural | Mechanical | Electrical | Sustainability | Environmental